2001 ASME BOILER & PRESSURE VESSEL CODE

AN INTERNATIONAL CODE

II

Part C –

Specifications for Welding Rods, Electrodes, and Filler Metals

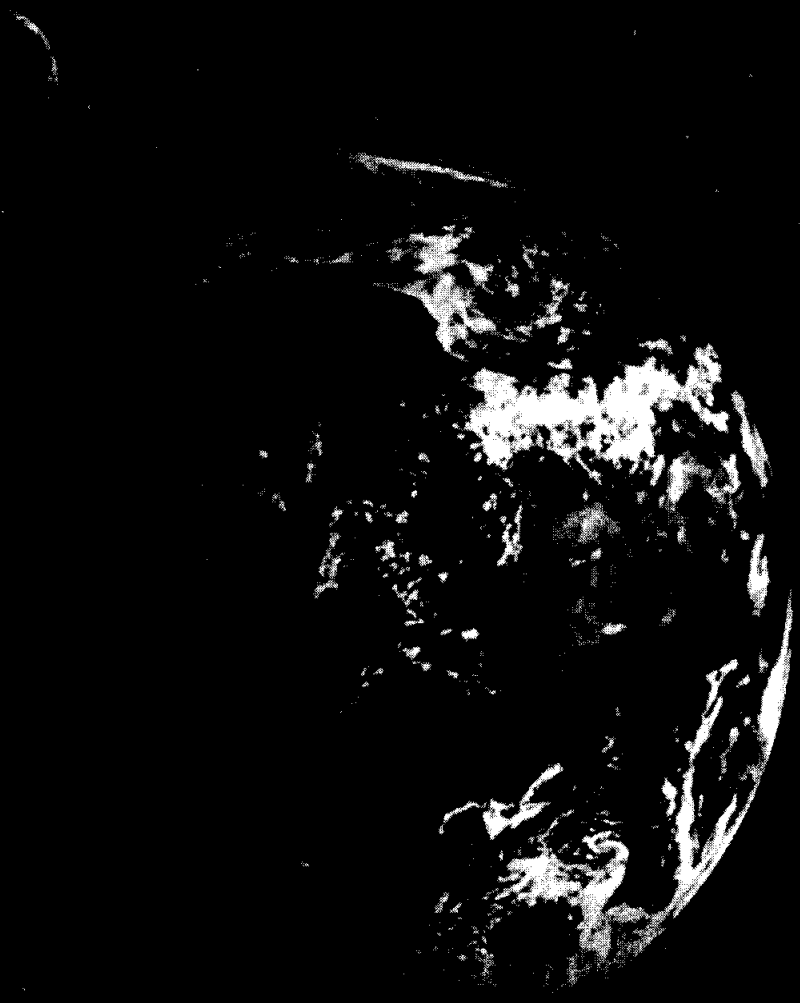

The American Society of Mechanical Engineers

MATERIALS

ASME BOILER AND PRESSURE VESSEL CODE
AN INTERNATIONAL CODE

MATERIALS

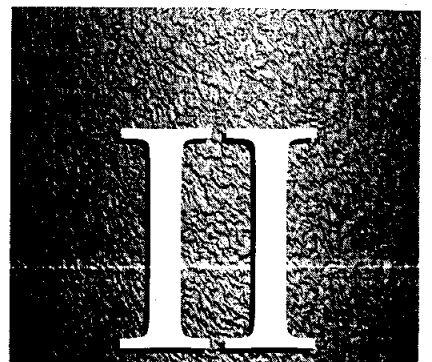

Part C –

Specifications for Welding Rods, Electrodes, and Filler Metals

2001 Edition
July 1, 2001

ASME BOILER AND PRESSURE VESSEL COMMITTEE SUBCOMMITTEE ON MATERIALS

THE AMERICAN SOCIETY OF MECHANICAL ENGINEERS
NEW YORK, NEW YORK

Date of Issuance: July 1, 2001
(Includes all Addenda dated July 2000 and earlier)

This international code or standard was developed under procedures accredited as meeting the criteria for American National Standards and it is an American National Standard. The Standards Committee that approved the code or standard was balanced to assure that individuals from competent and concerned interests have had an opportunity to participate. The proposed code or standard was made available for public review and comment that provides an opportunity for additional public input from industry, academia, regulatory agencies, and the public-at-large.

ASME does not "approve," "rate," or "endorse" any item, construction, proprietary device, or activity.

ASME does not take any position with respect to the validity of any patent rights asserted in connection with any items mentioned in this document, and does not undertake to insure anyone utilizing a standard against liability for infringement of any applicable letters patent, nor assume any such liability. Users of a code or standard are expressly advised that determination of the validity of any such patent rights, and the risk of infringement of such rights, is entirely their own responsibility.

Participation by federal agency representative(s) or person(s) affiliated with industry is not to be interpreted as government or industry endorsement of this code or standard.

ASME accepts responsibility for only those interpretations of this document issued in accordance with the established ASME procedures and policies, which precludes the issuance of interpretations by individuals.

The footnotes in this document are part of this American National Standard.



ASME collective membership mark

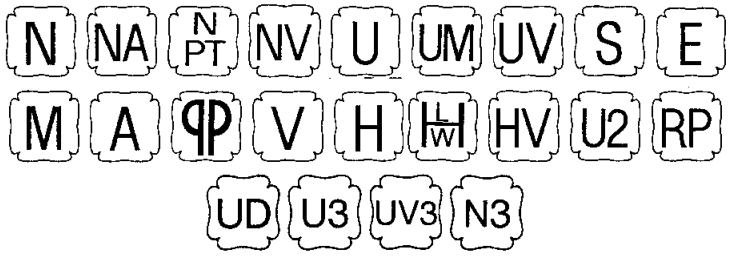

The above ASME symbols are registered in the U.S. Patent Office.
"ASME" is the trademark of the American Society of Mechanical Engineers.

The Specifications published and copyrighted by the American Welding Society
are reproduced with the Society's permission.

No part of this document may be reproduced in any form, in an electronic retrieval system or
otherwise, without the prior written permission of the publisher.

Library of Congress Catalog Card Number: 56-3934
Printed in the United States of America

Adopted by the Council of the American Society of Mechanical Engineers, 1914.
Revised 1940, 1941, 1943, 1946, 1949, 1952, 1953, 1956, 1959, 1962, 1965, 1968, 1971, 1974, 1977, 1980, 1983, 1986, 1989, 1992, 1995, 1998, 2001

The American Society of Mechanical Engineers
Three Park Avenue, New York NY 10016-5990

Copyright © 2001 by
THE AMERICAN SOCIETY OF MECHANICAL ENGINEERS
All Rights Reserved

2001 ASME
BOILER AND PRESSURE VESSEL CODE

SECTIONS

I Rules for Construction of Power Boilers
II Materials
- Part A — Ferrous Material Specifications
- Part B — Nonferrous Material Specifications
- Part C — Specifications for Welding Rods, Electrodes, and Filler Metals
- Part D — Properties

III Subsection NCA — General Requirements for Division 1 and Division 2
III Division 1
- Subsection NB — Class 1 Components
- Subsection NC — Class 2 Components
- Subsection ND — Class 3 Components
- Subsection NE — Class MC Components
- Subsection NF — Supports
- Subsection NG — Core Support Structures
- Subsection NH — Class 1 Components in Elevated Temperature Service
- Appendices

III Division 2 — Code for Concrete Reactor Vessels and Containments
III Division 3 — Containment Systems for Storage and Transport Packagings of Spent Nuclear Fuel and High Level Radioactive Material and Waste
IV Rules for Construction of Heating Boilers
V Nondestructive Examination
VI Recommended Rules for the Care and Operation of Heating Boilers
VII Recommended Guidelines for the Care of Power Boilers
VIII Rules for Construction of Pressure Vessels
- Division 1
- Division 2 — Alternative Rules
- Division 3 — Alternative Rules for Construction of High Pressure Vessels

IX Welding and Brazing Qualifications
X Fiber-Reinforced Plastic Pressure Vessels
XI Rules for Inservice Inspection of Nuclear Power Plant Components

ADDENDA

Colored-sheet Addenda, which include additions and revisions to individual Sections of the Code, are published annually and will be sent automatically to purchasers of the applicable Sections up to the publication of the 2004 Code. The 2001 Code is available only in the loose-leaf format; accordingly, the Addenda will be issued in the loose-leaf, replacement-page format.

INTERPRETATIONS

ASME issues written replies to inquiries concerning interpretation of technical aspects of the Code. The Interpretations for each individual Section will be published separately and will be included as part of the update service to that Section. They will be issued semiannually (July and December) up to the publication of the 2004 Code. Interpretations of Section III, Divisions 1 and 2, will be included with the update service to Subsection NCA.

CODE CASES

The Boiler and Pressure Vessel Committee meets regularly to consider proposed additions and revisions to the Code and to formulate Cases to clarify the intent of existing requirements or provide, when the need is urgent, rules for materials or constructions not covered by existing Code rules. Those Cases which have been adopted will appear in the appropriate 2001 Code Cases book: (1) Boilers and Pressure Vessels and (2) Nuclear Components. Supplements will be sent automatically to the purchasers of the Code Cases books up to the publication of the 2004 Code.

CONTENTS

Foreword vii
Statements of Policy xi
Guideline on Approval xiii
Personnel xv
AWS Personnel xxv
Preface xxix
Appendix I — Mandatory Preparation of Technical Inquiries to the Boiler and Pressure Vessel Committee xxxi
SI Units xxxiii
Summary of Changes xxxvii

SFA-5.1	Carbon Steel Electrodes for Shielded Metal Arc Welding	1
SFA-5.2	Carbon and Low Alloy Steel Rods for Oxyfuel Gas Welding	45
SFA-5.3	Aluminum and Aluminum-Alloy Electrodes for Shielded Metal Arc Welding	53
SFA-5.4	Stainless Steel Electrodes for Shielded Metal Arc Welding	67
SFA-5.5	Low-Alloy Steel Electrodes for Shielded Metal Arc Welding	99
SFA-5.6	Covered Copper and Copper Alloy Arc Welding Electrodes	149
SFA-5.7	Copper and Copper Alloy Bare Welding Rods and Electrodes	169
SFA-5.8	Filler Metals for Brazing and Braze Welding	179
SFA-5.9	Bare Stainless Steel Welding Electrodes and Rods	203
SFA-5.10	Bare Aluminum and Aluminum-Alloy Welding Electrodes and Rods	229
SFA-5.11	Niclel and Nickel-Alloy Welding Electrodes for Shielded Metal Arc Welding	257
SFA-5.12	Tungsten and Tungsten-Alloy Electrodes for Arc Welding and Cutting	289
SFA-5.13	Solid Surfacing Welding Rods and Electrodes	303
SFA-5.14	Nickel and Nickel-Alloy Bare Welding Electrodes and Rods	327
SFA-5.15	Welding Electrodes and Rods for Cast Iron	347
SFA-5.16	Titanium and Titanium Alloy Welding Rods and Electrodes	365
SFA-5.17	Carbon Steel Electrodes and Fluxes for Submerged Arc Welding	375
SFA-5.18	Carbon Steel Electrodes and Rods for Gas Shielded Arc Welding	403
SFA-5.20	Carbon Steel Electrodes for Flux Cored Arc Welding	433
SFA-5.21	Composite Surfacing Welding Rods and Electrodes	467
SFA-5.22	Stainless Steel Electrodes for Flux Cored Arc Welding and Stainless Steel Flux Cored Rods for Gas Tungsten Arc Welding	487
SFA-5.23	Low-Alloy Steel Electrodes and Fluxes for Submerged Arc Welding	527
SFA-5.24	Zirconium and Zirconium Alloy Welding Electrodes and Rods	561
SFA-5.25	Carbon and Low-Alloy Steel Electrodes and Fluxes for Electroslag Welding	569
SFA-5.26	Carbon and Low-Alloy Steel Electrodes for Electrogas Welding	593

SFA-5.28	Low-Alloy Steel Electrodes and Rods for Gas Shielded Arc Welding	617
SFA 5.29	Low Alloy Steel Electrodes for Flux Cored Arc Welding	649
SFA-5.30	Consumable Inserts	685
SFA-5.31	Fluxes for Brazing and Braze Welding	697
SFA-5.32	Welding Shielding Gases	707
SFA-5.01	Filler Metal Procurement Guidelines	723

FOREWORD

The American Society of Mechanical Engineers set up a committee in 1911 for the purpose of formulating standard rules for the construction of steam boilers and other pressure vessels. This committee is now called the Boiler and Pressure Vessel Committee.

The Committee's function is to establish rules of safety governing the design, fabrication, and inspection during construction of boilers and pressure vessels, and to interpret these rules when questions arise regarding their intent. In formulating the rules, the Committee considers the needs of users, manufacturers, and inspectors of pressure vessels. The objective of the rules is to afford reasonably certain protection of life and property and to provide a margin for deterioration in service so as to give a reasonably long, safe period of usefulness. Advancements in design and material and the evidence of experience have been recognized.

This Code contains mandatory requirements, specific prohibitions, and nonmandatory guidance for construction[1] activities. The Code does not address all aspects of these activities and those aspects which are not specifically addressed should not be considered prohibited. The Code is not a handbook and cannot replace education, experience, and the use of engineering judgment. The phrase *engineering judgment* refers to technical judgments made by knowledgeable designers experienced in the application of the Code. Engineering judgments must be consistent with Code philosophy and such judgments must never be used to overrule mandatory requirements or specific prohibitions of the Code.

The Committee recognizes that tools and techniques used for design and analysis change as technology progresses and expects engineers to use good judgment in the application of these tools. The designer is responsible for complying with Code rules and demonstrating compliance with Code equations when such equations are mandatory. The Code neither requires nor prohibits the use of computers for the design or analysis of components constructed to the requirements of the Code. However, designers and engineers using computer programs for design or analysis are cautioned that they are responsible for all technical assumptions inherent in the programs they use and they are responsible for the application of these programs to their design.

The Code does not fully address tolerances. When dimensions, sizes, or other parameters are not specified with tolerances, the values of these parameters are considered nominal and allowable tolerances or local variances may be considered acceptable when based on engineering judgment and standard practices as determined by the designer.

The Boiler and Pressure Vessel Committee deals with the care and inspection of boilers and pressure vessels in service only to the extent of providing suggested rules of good practice as an aid to owners and their inspectors.

The rules established by the Committee are not to be interpreted as approving, recommending, or endorsing any proprietary or specific design or as limiting in any way the manufacturer's freedom to choose any method of design or any form of construction that conforms to the Code rules.

The Boiler and Pressure Vessel Committee meets regularly to consider revisions of the rules, new rules as dictated by technological development, Code Cases, and requests for interpretations. Only the Boiler and Pressure Vessel Committee has the authority to provide official interpretations of this Code. Requests for revisions, new rules, Code Cases, or interpretations shall be addressed to the Secretary in writing and shall give full particulars in order to receive consideration and action (see Mandatory Appendix covering preparation of technical inquiries). Proposed revisions to the Code resulting from inquiries will be presented to the Main Committee for appropriate action. The action of the Main Committee becomes effective only after confirmation by letter ballot of the Committee and approval by ASME.

Proposed revisions to the Code approved by the Committee are submitted to the American National Standards Institute and published in *Mechanical Engineering* to invite comments from all interested persons. After the allotted time for public review and final

[1] *Construction*, as used in this Foreword, is an all-inclusive term comprising materials, design, fabrication, examination, inspection, testing, certification, and pressure relief.

approval by ASME, revisions are published annually in Addenda to the Code.

Code Cases may be used in the construction of components to be stamped with the ASME Code symbol beginning with the date of their approval by ASME.

After Code revisions are approved by ASME, they may be used beginning with the date of issuance shown on the Addenda. Revisions, except for revisions to material specifications in Section II, Parts A and B, become mandatory 6 months after such date of issuance, except for boilers or pressure vessels contracted for prior to the end of the 6 month period. Revisions to material specifications are originated by the American Society for Testing and Materials (ASTM), and other recognized national or international organizations and are usually adopted by ASME. However, those revisions may or may not have any effect on the suitability of material, produced to earlier editions of specifications, for use in ASME construction. ASME material specifications approved for use in each construction Code are listed in the Appendices of Section II, Parts A and B. These Appendices list, for each specification, the latest edition adopted by ASME, and earlier and later editions considered by ASME to be identical for ASME construction.

Manufacturers and users of components are cautioned against making use of revisions and Cases that are less restrictive than former requirements without having assurance that they have been accepted by the proper authorities in the jurisdiction where the component is to be installed.

Each state and municipality in the United States and each province in Canada that adopts or accepts one or more Sections of the Boiler and Pressure Vessel Code is invited to appoint a representative to act on the Conference Committee to the Boiler and Pressure Vessel Committee. Since the members of the Conference Committee are in active contact with the administration and enforcement of the rules, the requirements for inspection in this Code correspond with those in effect in their respective jurisdictions. The required qualifications for an Authorized Inspector under these rules may be obtained from the administrative authority of any state, municipality, or province which has adopted these rules.

The Boiler and Pressure Vessel Committee in the formulation of its rules and in the establishment of maximum design and operating pressures considers materials, construction, methods of fabrication, inspection, and safety devices. Permission may be granted to regulatory bodies and organizations publishing safety standards to use a complete Section of the Code by reference. If usage of a Section, such as Section IX, involves exceptions, omissions, or changes in provisions, the intent of the Code might not be attained.

Where a state or other regulatory body, in the printing of any Section of the Boiler and Pressure Vessel Code, makes additions or omissions, it is recommended that such changes be clearly indicated.

The National Board of Boiler and Pressure Vessel Inspectors is composed of chief inspectors of states and municipalities in the United States and of provinces in Canada that have adopted the Boiler and Pressure Vessel Code. This Board, since its organization in 1919, has functioned to uniformly administer and enforce the rules of the Boiler and Pressure Vessel Code. The cooperation of that organization with the Boiler and Pressure Vessel Committee has been extremely helpful.

The Code Committee does not rule on whether a component shall or shall not be constructed to the provisions of the Code. The Scope of each Section has been established to identify the components and parameters considered by the Committee in formulating the Code rules. Laws or regulations issued by municipality, state, provincial, federal, or other enforcement or regulatory bodies having jurisdiction at the location of an installation establish the mandatory applicability of the Code rules, in whole or in part, within their jurisdiction. Those laws or regulations may require the use of this Code for vessels or components not considered to be within its Scope or may establish additions or deletions in that Scope. Accordingly, inquiries regarding such laws or regulations are to be directed to the issuing enforcement or regulatory body.

Questions or issues regarding compliance of a specific component with the Code rules are to be directed to the ASME Certificate Holder (Manufacturer). Inquiries concerning the interpretation of the Code are to be directed to the ASME Boiler and Pressure Vessel Committee. ASME is to be notified should questions arise concerning improper use of an ASME Code symbol.

The specifications for materials given in Section II are identical with or similar to those of the Specifications published by ASTM, AWS, and other recognized national or international organizations. When reference is made in an ASME material specification to a non-ASME specification for which a companion ASME specification exists, the reference shall be interpreted as applying to the ASME material specification. Not all materials included in the material specifications in Section II have been adopted for Code use. Usage is limited to those materials and grades adopted by at least one of the other Sections of the Code for application under rules of that Section. All materials allowed by these various Sections and used for construction

within the scope of their rules shall be furnished in accordance with material specifications contained in Section II or referenced in Appendices A of Section II, Parts A and B except where otherwise provided in Code Cases or in the applicable Section of the Code. Materials covered by these specifications are acceptable for use in items covered by the Code Sections only to the degree indicated in the applicable Section. Materials for Code use should preferably be ordered, produced, and documented on this basis; Appendix A to Section II, Part A and Appendix A to Section II, Part B list editions of ASME and year dates of specifications that meet ASME requirements and which may be used in Code construction. Material produced to an acceptable specification with requirements different from the requirements of the corresponding specifications listed in Appendix A of Part A or Part B may also be used in accordance with the above, provided the material manufacturer or vessel manufacturer certifies with evidence acceptable to the Authorized Inspector that the corresponding requirements of specifications listed in Appendix A of Part A or Part B have been met. Material produced to an acceptable material specification is not limited as to country of origin.

When required by context in this Section, the singular shall be interpreted as the plural, and vice-versa; and the feminine, masculine, or neuter gender shall be treated as such other gender as appropriate.

Publication of the SI (Metric) Edition of the ASME Boiler and Pressure Vessel Code was discontinued with the 1986 Edition. Effective October 1, 1986, the SI Edition was withdrawn as an ASME Boiler and Pressure Vessel Code document.

STATEMENT OF POLICY ON THE USE OF CODE SYMBOLS AND CODE AUTHORIZATION IN ADVERTISING

ASME has established procedures to authorize qualified organizations to perform various activities in accordance with the requirements of the ASME Boiler and Pressure Vessel Code. It is the aim of the Society to provide recognition of organizations so authorized. An organization holding authorization to perform various activities in accordance with the requirements of the Code may state this capability in its advertising literature.

Organizations that are authorized to use Code Symbols for marking items or constructions which have been constructed and inspected in compliance with the ASME Boiler and Pressure Vessel Code are issued Certificates of Authorization. It is the aim of the Society to maintain the standing of the Code Symbols for the benefit of the users, the enforcement jurisdictions, and the holders of the symbols who comply with all requirements.

Based on these objectives, the following policy has been established on the usage in advertising of facsimiles of the symbols, Certificates of Authorization, and reference to Code construction. The American Society of Mechanical Engineers does not "approve," "certify," "rate," or "endorse" any item, construction, or activity and there shall be no statements or implications which might so indicate. An organization holding a Code Symbol and/or a Certificate of Authorization may state in advertising literature that items, constructions, or activities "are built (produced or performed) or activities conducted in accordance with the requirements of the ASME Boiler and Pressure Vessel Code," or "meet the requirements of the ASME Boiler and Pressure Vessel Code."

The ASME Symbol shall be used only for stamping and nameplates as specifically provided in the Code. However, facsimiles may be used for the purpose of fostering the use of such construction. Such usage may be by an association or a society, or by a holder of a Code Symbol who may also use the facsimile in advertising to show that clearly specified items will carry the symbol. General usage is permitted only when all of a manufacturer's items are constructed under the rules.

The ASME logo, which is the cloverleaf with the letters ASME within, shall not be used by any organization other than ASME.

STATEMENT OF POLICY ON THE USE OF ASME MARKING TO IDENTIFY MANUFACTURED ITEMS

The ASME Boiler and Pressure Vessel Code provides rules for the construction of boilers, pressure vessels, and nuclear components. This includes requirements for materials, design, fabrication, examination, inspection, and stamping. Items constructed in accordance with all of the applicable rules of the Code are identified with the official Code Symbol Stamp described in the governing Section of the Code.

Markings such as "ASME," "ASME Standard," or any other marking including "ASME" or the various Code Symbols shall not be used on any item which is not constructed in accordance with all of the applicable requirements of the Code.

Items shall not be described on ASME Data Report Forms nor on similar forms referring to ASME which tend to imply that all Code requirements have been met when, in fact, they have not been. Data Report Forms covering items not fully complying with ASME requirements should not refer to ASME or they should clearly identify all exceptions to the ASME requirements.

GUIDELINE ON THE APPROVAL OF NEW WELDING AND BRAZING MATERIAL CLASSIFICATIONS UNDER THE ASME BOILER AND PRESSURE VESSEL CODE

Code Policy. It is the policy of the ASME Boiler and Pressure Vessel Committee to adopt for inclusion in Section II, Part C, only such specifications as have been adopted by the American Welding Society (AWS), and by other recognized national or international organizations.

It is expected that requests for Code approval will normally be for welding and brazing materials (hereafter termed "consumables") for which there is a recognized national or international specification. For consumables made to a recognized national or international specification other than those of the AWS, the inquirer shall give notice to the standards developing organization that a request has been made to the ASME for adoption of their specification under the ASME Code, and shall request that organization to grant ASME permission to reprint the standard. For other consumables, a request shall be made to the AWS, or a recognized national or international organization, to develop a specification that can be presented to the Code Committee.

It is the policy of the ASME Boiler and Pressure Vessel Committee to consider requests to adopt new consumables for use by boiler, pressure vessel, or nuclear power plant component Manufacturers or end users. Further, such requests should be for consumables for which there is a reasonable expectation of use in a boiler, pressure vessel, or nuclear power plant component constructed to the rules of one of the Sections of this Code.

Application. The inquirer shall identify to the Committee all product forms, size ranges, and specifications for which incorporation is desired, and state whether or not the comsumable is covered by patents, whether or not it is licensed, and if licensed, any limitations on its manufacture.

Weldability/Brazability. The inquirer shall furnish complete data on procedure qualification tests made in accordance with the requirements of Section IX. Such tests shall be made over the full range of base metal thickness in which the consumable is to be used. Pertinent information on deposited metal, such as effects from postweld heat treatment, susceptibility to air hardening, effects of joining processes, expected notch toughness values, and the amount of experience in use of the comsumable shall be given.

Physical Changes. For new consumables, it is important to know the structural stability characteristics and the degree of retention of properties with exposure at temperature. The influence of welding or brazing and thermal treatment operations on the mechanical properties, ductility, and microstructure of the deposited metal are important, particularly where degradation in properties may occur. Where particular temperature ranges of exposure or heat treatment, cooling rates, combinations of mechanical working and thermal treatments, fabrication practices, exposure to particular environments, etc., cause significant changes in the mechanical properties, microstructure, resistance to brittle fracture, etc., it is of prime importance to call attention to those conditions that should be avoided in service or in manufacture of parts or vessels using the consumable.

Requests for Additional Data. The Committee may request additional data, including data on properties or deposited metal behavior not explicitly treated in the construction Code in which adoption is desired.

Code Case. The Code Committee will consider the issuance of an ASME Code Case, to be effective for a period of three years, permitting the treatment of a new welding or brazing material under an existing ASME IX grouping for qualification purposes, provided that the following conditions are met:

(a) The inquirer provides evidence that a request for coverage of the consumable in a specification has

been made to the AWS or a recognized national or international organization;

(b) the consumable is commercially available and can be purchased within the proposed specification requirements;

(c) the inquirer shows that there will be a reasonable demand for the consumable by industry and that there exists an urgency for approval by means of a Code Case;

(d) the requests for approval of the consumable shall clearly describd it in specification form, including applicable items as scope, process, manufacture, conditions for delivery, heat treatment, chemical and tensile requirements, testing specifications and requirements, workmanship, finish, marking, inspection, and rejection;

(e) all other requirements identified previously under Code Policy and Applications apply; and

(f) the inquirer shall furnish the Code Committee with all the data specified in this Appendix.

Requirements for Requests for ASME Acceptance of Welding and Brazing Material Specifications to Recognized National or International Standards Other Than the AWS. The Committee will consider only requests in accordance with the Boiler and Pressure Vessel Committee Operating and Administrative Procedures, OP-8.6 (English language: U.S. or SI/ metric units). The Committee will consider accepting specifications of recognized national or international organizations in accordance with OP-8.6 such as, but not limited to, AWS, CSA, CEN, DIN, and JIS. Consumable specifications of other than national or international organizations, such as those of consumable producers and suppliers, will not be considered for acceptance.

Requirements for Recognized National or International Specifications. Acceptable consumable specifications will be identified by date or edition. Approved edition(s) will be stated in the subtitle of the ASME specification. Minimum requirements that must be contained in a consumable specification for which acceptance is being requested include such items as name of national or international organization, scope, reference documents, process, manufacture, conditions for delivery, heat treatment, chemical and tensile requirements, testing specifications and requirements, workmanship, finish, marking, inspection, and rejection.

Publication of Recognized National or International Specifications. Specifications for which ASME has not been given permission to publish by the originating organization will be referenced on a coversheet in appropriate Appendices in Section II, Part C, along with information on where to obtain a copy of those documents. Documents that are referenced in accepted non-AWS consumable specifications will not be published by ASME. However, information on where to obtain a copy of those documents will be maintained in Section II, Part C. Additions and exceptions to the consumable specification will be noted in the subtitle of the specification.

New Welding and Brazing Materials Checklist. To assist inquirers desiring Code coverage for new consumables, or extending coverage of existing consumables, the Committee has developed the following checklist of items that ought to be addressed by each inquiry. The Committeee reserves the right to request additional data and application information when considering new consumables.

(a) Has a qualified inquirer request been provided?

(b) Has a request for either revision to existing Code requirements or for a Code Case been defined?

(c) Has a letter to the AWS been submitted requesting coverage of the new consumable in a specification, and has a copy been submitted to the Committee? Alternatively, is this consumable already covered by a specification issued by a recognized national or international organization, and has an English language version been provided?

(d) Has the Construction Code and Division coverage been identified?

(e) Have mechanical property data been submitted (ultimate tensile strength, yield strength, reduction of area, and elongation) for each intended joining process?

(f) Have toughness considerations required by the Construction Code been defined and has appropriate data been submitted?

(g) Have joining requirements been defined and has procedure qualification test data been submitted?

(h) Has influence of fabrication practices on deposited metal properties been defined?

PERSONNEL

ASME Boiler and Pressure Vessel Committee Subcommittees, Subgroups, and Working Groups

As of January 1, 2001

MAIN COMMITTEE

D. A. Canonico, *Chair*
G. G. Karcher, *Vice Chair*
J. S. Brzuszkiewicz, *Secretary*
R. W. Barnes
F. P. Barton
D. L. Berger
M. D. Bernstein
M. N. Bressler
P. J. Conlisk
R. E. Feigel
J. G. Feldstein
R. E. Gimple
M. Gold
O. F. Hedden
A. J. Justin
D. F. Landers
W. M. Lundy
J. R. MacKay
T. G. McCarty
U. R. Miller
G. C. Millman
R. A. Moen
P. A. Molvie
C. C. Neely
T. P. Pastor
C. J. Pieper
R. F. Reedy
B. W. Roberts
F. J. Schaaf, Jr.
A. Selz
D. E. Tanner

EXECUTIVE COMMITTEE (MAIN COMMITTEE)

G. G. Karcher, *Chair*
D. A. Canonico, *Vice Chair*
J. S. Brzuszkiewicz, *Secretary*
J. G. Feldstein
M. Gold
O. F. Hedden
A. J. Justin
J. R. MacKay
T. P. Pastor

HONORARY MEMBERS (MAIN COMMITTEE)

R. D. Bonner
R. J. Bosnak
H. M. Canavan
L. J. Chockie
J. S. Clarke
W. E. Cooper
W. D. Doty
R. C. Griffin
E. J. Hemzy
J. E. Lattan
J. LeCoff
F. N. Moschini
W. E. Somers
L. P. Zick, Jr.

HONORS AND AWARDS COMMITTEE

J. R. MacKay, *Chair*
A. J. Spencer, *Vice Chair*
M. R. Argenziano, *Secretary*
F. P. Barton
M. D. Bernstein
J. G. Feldstein
M. Gold
F. E. Gregor
D. P. Jones
T. P. Pastor
C. J. Pieper

MARINE CONFERENCE GROUP

J. Tiratto, *Chair*
L. W. Douthwaite
J. L. Jones
G. F. Wright

CONFERENCE COMMITTEE

A. J. Justin — Ohio *(Secretary)*
R. J. Aben, Jr. — Michigan
E. A. Anderson — Chicago, Illinois
J. Anderson — South Dakota
R. B. Barkdoll — Washington
R. Barlett — Arizona
F. P. Barton — Virginia
D. E. Burns — Nebraska
C. Castle — Nova Scotia, Canada
R. R. Cate — Louisiana
L. Chase — Northwest Territories, Canada
R. A. Coomes — Kentucky
J. Corcoran — Connecticut
D. A. Douin — Illinois
D. Eastman — Newfoundland and Labrador, Canada
G. L. Ebeyer — New Orleans, Louisiana
E. Everett — Georgia
P. C. Hackford — Utah
D. H. Hanrath — North Carolina
J. B. Harlan — Delaware
M. L. Holloway — Oklahoma
K. Hynes — Prince Edward Island, Canada
D. T. Jagger — Ohio
D. J. Jenkins — Kansas
M. Kotb — Quebec, Canada
K. T. Lau — Alberta, Canada
J. Lemire — California
C. Lundine — Oregon
S. E. Lyons — Arkansas
M. A. Malek — Florida
G. F. Mankel — Alaska
I. W. Mault — Manitoba, Canada
H. T. McEwen — Mississippi
A. W. Meiring — Indiana
R. Mile — Ontario, Canada
M. F. Mooney — Massachusetts
Y. Nagpaul — Hawaii
J. D. Payton — Pennsylvania
D. K. Peetz — Missouri
M. R. Peterson — Alaska
D. C. Price — Yukon Territory, Canada
R. S. Pucek — Wisconsin
C. D. Redmond — Michigan
R. D. Reetz — North Dakota
D. E. Ross — New Brunswick, Canada
M. Shuff — West Virginia
N. Surtees — Saskatchewan, Canada
M. J. Verhagen — Wisconsin
M. Washington — New Jersey
R. B. West — Iowa
M. J. Wheel — Vermont
R. K. White — New York
T. F. Wickham — Rhode Island
C. S. Withers — Colorado

INTERNATIONAL INTEREST REVIEW GROUP

V. Felix
L. S. Hung
P. Williamson

SUBCOMMITTEE ON POWER BOILERS (SC I)

J. R. MacKay, *Chair*
M. D. Bernstein, *Vice Chair*
J. N. Shih, *Secretary*
D. L. Berger
E. Everett
F. R. Gerety
J. Hainsworth
T. E. Hansen
J. S. Hunter
C. F. Jeerings
W. L. Lowry
T. C. McGough
R. E. McLaughlin
P. A. Molvie
D. K. Parrish
J. T. Pillow
R. G. Presnak
B. W. Roberts
R. D. Schueler, Jr.
R. V. Wielgoszinski
R. L. Williams

Subgroup on Design (SC I)

M. D. Bernstein, *Chair*
R. D. Schueler, Jr., *Vice Chair*
P. A. Molvie, *Secretary*
M. L. Coats
J. D. Fishburn
C. F. Jeerings
N. Surtees
R. V. Wielgoszinski

Subgroup on Fabrication and Examination (SC I)

D. L. Berger, *Chair*
R. E. McLaughlin, *Secretary*
J. Hainsworth
T. E. Hansen
T. C. McGough
S. C. Petitgout
J. T. Pillow
R. D. Schueler, Jr.
R. V. Wielgoszinski

Subgroup on General Requirements (SC I)

T. C. McGough, *Chair*
M. D. Bernstein, *Vice Chair*
W. L. Lowry, *Secretary*
D. L. Berger
E. Everett
F. R. Gerety
J. Hainsworth
C. F. Jeerings
J. M. Lyons
R. E. McLaughlin
D. K. Parrish
J. T. Pillow
R. L. Williams

Subgroup on Materials (SC I)

B. W. Roberts, *Chair*
J. S. Hunter, *Secretary*
J. F. Henry
J. P. Libbrecht
F. Masuyama
J. M. Tanzosh
H. N. Titer, Jr.

Subgroup on Piping (SC I)

T. E. Hansen, *Chair*
D. L. Berger
M. D. Bernstein
P. D. Edwards
W. L. Lowry
T. C. McGough
R. G. Presnak
E. A. Whittle

SUBCOMMITTEE ON MATERIALS (SC II)

M. Gold, *Chair*
R. A. Moen, *Vice Chair*
N. Lobo, *Secretary*
D. C. Agarwal
W. R. Apblett, Jr.
M. N. Bressler
J. Cameron
W. D. Doty
D. W. Gandy
M. H. Gilkey
J. J. Heger
J. F. Henry
C. L. Hoffmann
G. C. Hsu
F. Masuyama
J. R. Maurer
R. K. Nanstad
M. L. Nayyar
E. G. Nisbett
J. T. Parsons
D. W. Rahoi
B. W. Roberts
J. T. Parsons
D. W. Rahoi
B. W. Roberts
R. R. Seeley
E. Shapiro
C. E. Spaeder, Jr.
R. W. Swindeman
J. M. Tanzosh
B. E. Thurgood
R. S. Vecchio

Honorary Members (SC II)

A. P. Ahrendt
R. Dirscherl
W. D. Edsall
A. W. Zeuthen

Subgroup on External Pressure (SC II & SC-D)

R. W. Mikitka, *Chair*
B. R. Morelock, *Secretary*
D. C. Agarwal
D. J. Green
D. S. Griffin
M. Katcher
D. L. Kurle
E. Michalopoulos
D. Nadel
D. F. Shaw
C. E. Spaeder, Jr.
C. H. Sturgeon

Subgroup on Ferrous Specifications (SC II)

E. G. Nisbett, *Chair*
K. L. Aber
A. Appleton
B. M. Dingman
T. Graham
W. N. Holliday
D. Janikowski
D. C. Krouse
J. F. Longenecker
W. C. Mack
J. R. Maurer
A. S. Melilli
K. E. Orie
E. Upitis
R. Zawierucha
A. W. Zeuthen
R. H. Zong

Subgroup on International Material Specifications (SC II)

R. R. Seeley, *Chair*
W. M. Lundy, *Secretary*
D. C. Agarwal
J. Cameron
W. D. Doty
D. M. Fryer
J. P. Glaspie
M. Gold
H. Masahisa
F. Osweiller
J. T. Parsons
R. D. Schueler, Jr.
R. C. Soin
E. A. Steen
E. Upitis

Subgroup on Nonferrous Alloys (SC II)

D. W. Rahoi, *Chair*
D. C. Agarwal, *Secretary*
W. R. Apblett, Jr.
L. G. Coffee
A. Cohen
M. H. Gilkey
B. Heuer
G. C. Hsu
M. Katcher
A. G. Kireta, Jr.
R. Kissell
E. Shapiro
L. E. Shoemaker
R. C. Sutherlin

Subgroup on Strength, Ferrous Alloys (SC II)

B. W. Roberts, *Chair*
J. M. Tanzosh, *Secretary*
W. R. Apblett, Jr.
M. Gold
J. J. Heger
C. L. Hoffmann
S. Kinomura
F. Masuyama
R. A. Moen
D. W. Rahoi
C. E. Spaeder, Jr.
R. W. Swindeman
B. E. Thurgood
T. P. Vassallo

Subgroup on Strength of Weldments (SC II & SC IX)

J. M. Tanzosh, *Chair*
C. Robino, *Secretary*
W. D. Doty
J. F. Henry
D. W. Rahoi
B. W. Roberts
C. E. Spaeder, Jr.
W. J. Sperko

Subgroup on Toughness (SC II & VIII)

W. S. Jacobs, *Chair*
R. J. Basile
J. Cameron
W. D. Doty
H. E. Gordon
G. B. Komora
K. Mokhtarian
R. K. Nanstad
C. C. Neely
T. T. Phillips
M. D. Rana
R. R. Seeley
J. W. Stokes
E. Upitis
R. S. Vecchio
S. Yukawa
R. Zawierucha

SUBCOMMITTEE ON NUCLEAR POWER (SC III)

C. J. Pieper, *Chair*
R. M. Jessee, *Vice Chair*
C. A. Sanna, *Secretary*
Y. Asada
R. W. Barnes
W. H. Borter
E. B. Branch
M. N. Bressler
F. C. Cherny
G. D. Cooper
R. P. Deubler
W. D. Doty
F. R. Drahos
K. Ennis
B. A. Erler
G. M. Foster
D. H. Hanrath
R. S. Hill III
C. L. Hoffmann
K.-H. Hsu
C. C. Kim
D. F. Landers
W. C. LaRochelle
W. N. McLean
R. A. Moen
D. B. Nickerson
R. F. Perrin
R. F. Reedy
B. B. Scott
M. W. Smith
J. D. Stevenson
K. R. Wichman

Subgroup on Containment Systems for Spent Fuel and High-Level Waste Transport Packagings (SC III)

G. M. Foster, *Chair*
G. J. Solovey, *Vice Chair*
D. K. Morton
W. H. Borter
J. T. Conner
R. R. Doggart
E. L. Farrow
J. M. Floyd
D. R. Heath
W. H. Lake
H. W. Lee
P. McConnell
T. J. Neider
R. E. Nickell
D. T. Raske
T. Saegusa
N. M. Simpson
R. H. Smith
K. B. Sorenson
J. D. Stevenson
C. J. Temus
P. Turula
S. Yukawa

Subgroup on Design (SC III)

R. P. Deubler, *Chair*
E. B. Branch, *Vice Chair*
A. N. Nguyen, *Secretary*
T. M. Adams
Y. Asada
R. W. Barnes
M. N. Bressler
C. W. Bruny
D. L. Caldwell
J. R. Cole
G. D. Cooper
R. E. Cornman, Jr.
D. H. Hanrath
R. W. Haupt
R. S. Hill III
B. Jarman
R. I. Jetter
J. T. Land
D. F. Landers
W. N. McLean
J. C. Minichiello
D. B. Nickerson
W. Z. Novak
E. C. Rodabaugh
I. Saito
J. R. Santangelo
G. C. Slagis
J. D. Stevenson
K. R. Wichman

Working Group on Administration (SG-D) (SC III)

E. B. Branch, *Chair*
R. W. Barnes, *Vice Chair*
R. S. Hill III, *Secretary*
C. W. Bruny
R. P. Deubler
J. T. Land
D. F. Landers
W. N. McLean
D. B. Nickerson
W. Z. Novak
J. R. Santangelo

Working Group on Supports (SG-D) (SC III)

R. J. Masterson, *Chair*
R. M. Dulin, Jr., *Secretary*
U. S. Bandyopadhyay
F. J. Birch
J. R. Cole
R. P. Deubler
J. C. Finneran, Jr.
J. C. Hennart
A. S. Laurenson
A. E. Meligi
G. C. Mok
A. N. Nguyen
I. Saito
J. R. Stinson
C.-I. Wu

Working Group on Core Support Structures (SG-D) (SC III)

J. T. Land, *Chair*
R. H. Hansen
K. B. Larsen
J. F. Mullooly

Working Group on Dynamic and Extreme Load Conditions (SG-D) (SC III)

D. L. Caldwell, *Chair*
P. L. Anderson, *Secretary*
M. K. Au-Yang
R. D. Blevins
P.-Y. Chen
A. Hadjian
W. S. LaPay
H. Lockert
A. E. Meligi
P. R. Olson
R. F. Perry

Working Group on Piping (SG-D) (SC III)

J. R. Cole, *Chair*
P. Hirschberg, *Secretary*
T. M. Adams
G. A. Antaki
J. T. Conner
A. B. Glickstein
R. J. Gurdal
R. W. Haupt
J. C. Hennart
R. S. Hill III
R. D. Hookway
R. B. Jenkins
D. F. Landers
K. A. Manoly
J. F. McCabe
J. C. Minichiello
S. E. Moore
A. N. Nguyen
O. O. Oyamada
R. D. Patel
E. C. Rodabaugh
J. R. Santangelo
M. S. Sills
G. C. Slagis
V. K. Verma
E. A. Wais
C.-I. Wu

Working Group on Pumps (SG-D) (SC III)

R. E. Cornman, Jr., *Chair*
H. L. Brammer
A. A. Fraser
M. Higuchi
G. R. Jones
J. W. Leavitt
J. E. Livingston
D. B. Nickerson
R. A. Schussler
D. B. Spencer, Jr.
H. Tafarrodi
G. K. Vaghasia

Working Group on Valves (SG-D) (SC III)

W. N. McLean, *Chair*
R. R. Brodin
R. Koester
J. D. Page
S. N. Shields
H. R. Sonderegger
J. C. Tsacoyeanes
R. G. Visalli

Working Group on Vessels (SG-D) (SC III)

C. W. Bruny, *Chair*
G. D. Cooper
D. H. Hanrath
M. Hartzman
W. J. Heilker
A. Kalnins
T. M. Khan
O. Maekawa
K. A. Manoly
D. E. Matthews
G. K. Miller
W. Z. Novak
E. Pelling
H. S. Thornton

Special Working Group on Environmental Effects (SG-D) (SC III)

W. Z. Novak, *Chair*
Y. Asada
W. J. Heilker
R. S. Hill III
C. L. Hoffmann
R. A. Moen
S. Yukawa

Special Working Group on Seismic Piping Rules (SG-D) (SC III)

E. B. Branch, *Chair*
T. M. Adams
G. A. Antaki
K. Hasegawa
T. Isogai
H. Kobayashi
V. Matzen
J. C. Minichiello
M. S. Sills
Y. Urabe
E. A. Wais
T. Yamazaki

Subgroup on General Requirements (SC III & SC 3C)

W. C. LaRochelle, *Chair*
K. Ennis, *Secretary*
A. Appleton
B. H. Berg
C. Lizotte
R. P. McIntyre
M. J. Meyer
R. Mile
M. R. Minick
R. F. Perrin
B. B. Scott
D. M. Vickery
D. V. Walshe

Subgroup on Materials, Fabrication, and Examination (SC III)

C. L. Hoffmann, *Chair*
G. P. Milley, *Secretary*
C. W. Allison
B. H. Berg
W. H. Borter
D. Doyle
F. R. Drahos
G. M. Foster
G. B. Georgiev
J. E. Harris
R. W. Jackson
R. M. Jessee
C. C. Kim
R. A. Moen
H. Murakami
C. J. Pieper
N. M. Simpson
R. C. Soin
W. J. Sperko
K. B. Stuckey
S. Yukawa

Subgroup on Pressure Relief (SC III)

S. F. Harrison, Jr., *Chair*
F. C. Cherny
E. M. Petrosky
M. W. Smith
A. L. Szeglin
D. G. Thibault
B. S. York

Special Working Group on Editing and Review (SC III)

R. F. Reedy, *Chair*
W. H. Borter
M. N. Bressler
D. L. Caldwell
R. P. Deubler
B. A. Erler
D. H. Hanrath
W. C. LaRochelle
M. W. Smith
J. D. Stevenson

JOINT ACI-ASME COMMITTEE ON CONCRETE COMPONENTS FOR NUCLEAR SERVICE (SC 3C)

M. F. Hessheimer, *Chair*
S. J. Rossi, *Secretary*
J. P. Allen III
J. F. Artuso
R. M. Attar
A. C. Eberhardt
B. A. Erler
D. J. Haavik
T. C. Inman
D. C. Jeng
T. E. Johnson
N.-H. Lee
S. F. Putman
B. B. Scott
R. E. Shewmaker
J. D. Stevenson
A. Y. Wong

SUBCOMMITTEE ON HEATING BOILERS (SC IV)

F. P. Barton, *Chair*
P. A. Molvie, *Vice Chair*
M. R. Argenziano, *Secretary*
T. L. Bedeaux
W. L. Haag, Jr.
W. M. Hiddleston
J. D. Hoh
D. H. Mapes
K. M. McTague
K. R. Moskwa
R. I. Mullican
E. A. Nordstrom
J. L. Seigle
D. E. Tanner
S. V. Voorhees
R. H. Weigel
R. V. Wielgoszinski
J. I. Woodworth
R. B. Duggan, *Honorary Member*

Subgroup on Care and Operation of Heating Boilers (SC IV)

J. I. Woodworth, *Chair*
M. R. Argenziano, *Secretary*
T. L. Bedeaux
K. J. Hoey
J. D. Hoh
K. M. McTague
P. A. Molvie
R. I. Mullican
T. F. Wickham

Subgroup on Cast Iron Boilers (SC IV)

K. M. McTague, *Chair*
C. P. McQuiggan
K. R. Moskwa
R. H. Weigel
T. F. Wickham
J. I. Woodworth

Subgroup on Water Heaters (SC IV)

W. L. Haag, Jr., *Chair*
T. L. Bedeaux
T. D. Gantt
W. M. Hiddleston
F. M. Lucas
K. M. McTague
R. I. Mullican
D. E. Tanner
M. A. Taylor
T. E. Trant

Subgroup on Welded Boilers (SC IV)

P. A. Molvie, *Chair*
T. L. Bedeaux
D. H. Mapes
E. A. Nordstrom
J. L. Seigle
R. P. Sullivan
D. E. Tanner
R. V. Wielgoszinski

SUBCOMMITTEE ON NONDESTRUCTIVE EXAMINATION (SC V)

T. G. McCarty, *Chair*
J. E. Batey, *Vice Chair*
E. H. Maradiaga, *Secretary*
S. J. Akrin
A. S. Birks
W. T. Clayton
N. Y. Faransso
O. F. Hedden
G. W. Hembree
F. B. Kovacs
R. W. Kruzic
J. F. Manning
W. C. McGaughey
R. D. McGuire
F. J. Sattler
E. F. Summers, Jr.
M. J. Wheel

Subgroup on General Requirements/ Personnel Qualifications and Inquiries (SC V)

R. D. McGuire, *Chair*
J. E. Batey
W. T. Clayton
N. Y. Faransso
H. C. Graber
G. W. Hembree
J. R. MacKay

Subgroup on Surface Examination Methods (SC V)

A. S. Birks, *Chair*
S. J. Akrin
T. Alexander
B. H. Clark, Jr.
H. C. Graber
G. W. Hembree
R. W. Kruzic
F. J. Sattler
E. F. Summers, Jr.
M. J. Wheel

Subgroup on Volumetric Methods (SC V)

J. E. Batey, *Chair*
S. J. Akrin
W. T. Clayton
N. Y. Faransso
H. C. Graber
G. W. Hembree
B. Kellerhall
E. K. Kietzman
F. B. Kovacs
R. W. Kruzic
J. F. Manning
W. C. McGaughey
J. R. Mitchell

Working Group on Acoustic Emissions (SG-VM) (SC V)

B. H. Clark, Jr.
P. M. Horrigan
J. F. Manning
J. R. Mitchell

Working Group on Radiography (SG-VM) (SC V)

G. W. Hembree, *Chair*
S. J. Akrin
T. Alexander
J. E. Batey
N. Y. Faransso
H. C. Graber
F. B. Kovacs
R. W. Kruzic

Working Group on Ultrasonics (SG-VM) (SC V)

W. T. Clayton, *Chair*
O. F. Hedden
B. Kellerhall
E. K. Kietzman
J. F. Manning
W. C. McGaughey
R. Paillaman
F. J. Sattler
M. L. Shakinovsky

SUBCOMMITTEE ON PRESSURE VESSELS (SC VIII)

T. P. Pastor, *Chair*
K. Mokhtarian, *Vice Chair*
A. J. Roby, *Secretary*
V. Bogosian
J. Cameron
S. C. Cyr
R. M. Elliott
R. E. Feigel
J. G. Feldstein
M. J. Houle
W. S. Jacobs
G. G. Karcher
G. B. Komora
K. T. Lau
R. W. Mikitka
U. R. Miller
C. C. Neely
M. D. Rana
S. C. Roberts
C. D. Rodery
K. J. Schneider
A. Selz
J. R. Sims, Jr.
A. J. Spencer
E. A. Steen
E. L. Thomas, Jr.

Subgroup on Design (SC VIII)

U. R. Miller, *Chair*
R. E. Knoblock, *Secretary*
R. J. Basile
M. R. Bauman
M. R. Breach
S. M. Caldwell
J. R. Farr
J. P. Glaspie
G. G. Karcher
G. B. Komora
R. W. Mikitka
K. Mokhtarian
T. P. Pastor
M. D. Rana
G. B. Rawls, Jr.
C. D. Rodery
A. Selz
S. C. Shah
J. W. Stokes
E. L. Thomas, Jr.

Subgroup on Fabrication and Inspection (SC VIII)

C. D. Rodery, *Chair*
E. A. Steen, *Vice Chair*
J. L. Arnold
W. J. Bees
H. E. Gordon
M. J. Houle
W. S. Jacobs
R. A. Johnson
D. J. Kreft
F. C. Ouyang
M. J. Pischke
M. J. Rice
W. P. Webb

Subgroup on General Requirements (SC VIII)

S. C. Roberts, *Chair*
V. Bogosian
M. L. Coats
R. M. Elliott
J. P. Glaspie
K. T. Lau
W. E. Laveck, Jr.
A. S. Mann
C. C. Neely
A. S. Olivares
K. J. Schneider
A. J. Spencer

Subgroup on Materials (SC VIII)

J. Cameron, *Chair*
K. L. Aber
D. C. Agarwal
W. D. Doty
D. A. Franklin
B. Heuer
M. Katcher
W. M. Lundy
E. E. Morgenegg
E. G. Nisbett
J. T. Parsons
D. W. Rahoi
E. Upitis

Special Working Group on Heat Transfer Equipment (SC VIII)

G. B. Komora, *Chair*
R. P. Zoldak, *Secretary*
S. M. Caldwell
M. J. Holtz
R. Mahadeen
U. R. Miller
T. W. Norton
F. Osweiller
S. C. Roberts
R. J. Stastny
S. Yokell

Special Working Group on High-Pressure Vessels (SC VIII)

J. R. Sims, Jr., *Chair*
P. A. Reddington, *Secretary*
L. P. Antalffy
J. E. Baxter
R. C. Biel
T. B. Boyd
D. J. Burns
P. N. Chaku
R. E. Feigel
D. M. Fryer
J. L. Heck, Jr.
A. H. Honza
M. M. James
P. Jansson
J. A. Kapp
D. P. Kendall
A. K. Khare
S. C. Mordre
G. J. Mraz
S. N. Pagay
E. H. Perez
D. T. Peters
L. M. Picqueur
E. D. Roll
W. L. Stewart
J. F. Sullivan
F. W. Tatar

SUBCOMMITTEE ON WELDING (SC IX)

J. G. Feldstein, *Chair*
W. J. Sperko, *Vice Chair*
J. N. Shih, *Secretary*
R. B. Barkdoll
D. A. Bowers
M. L. Carpenter
L. P. Connor
W. D. Doty
P. D. Flenner
M. J. Houle
R. A. Johnson
W. M. Lundy
R. D. McGuire
A. H. Miller
B. R. Newmark
P. P. Norris
A. S. Olivares
M. J. Pischke
S. D. Reynolds, Jr.
M. J. Rice
G. W. Spohn III
M. J. Stanko
P. L. Van Fosson
R. R. Young
W. K. Scattergood, *Honorary Member*

Subgroup on Brazing (SC IX)

M. J. Pischke, *Chair*
M. L. Carpenter
M. J. Houle
C. F. Jeerings
A. H. Miller
C. Robino

Subgroup on General Requirements (SC IX)

B. R. Newmark, *Chair*
R. B. Barkdoll
P. R. Evans
P. C. Filean
R. M. Jessee
D. W. Mann
A. S. Olivares
H. B. Porter
R. A. Weiss
K. R. Willens

Subgroup on Materials (SC IX)

M. L. Carpenter, *Chair*
L. P. Connor
P. D. Flenner
R. M. Jessee
C. C. Kim
A. H. Miller
H. A. Sadler
C. E. Sainz
C. E. Spaeder, Jr.
W. J. Sperko
M. J. Stanko
R. R. Young

Subgroup on Performance Qualification (SC IX)

D. A. Bowers, *Chair*
V. A. Bell
L. P. Connor
R. A. Coomes
P. D. Flenner
G. Herrmann
M. J. Houle
W. M. Lundy
R. D. McGuire
P. P. Norris
W. K. Scattergood
G. W. Spohn III

Subgroup on Procedure Qualification (SC IX)

D. A. Bowers, *Chair*
R. K. Brown, Jr.
R. A. Johnson
D. W. Mann
A. H. Miller
P. P. Norris
A. S. Olivares
F. C. Ouyang
S. D. Reynolds, Jr.
M. J. Rice
W. K. Scattergood
W. J. Sperko
P. L. Van Fosson
T. C. Wiesner
P. R. Wilt

SUBCOMMITTEE ON FIBER-REINFORCED PLASTIC PRESSURE VESSELS (SC X)

P. J. Conlisk, *Chair*
D. Eisberg, *Vice Chair*
A. J. Roby, *Secretary*
F. L. Brown
J. L. Bustillos
T. W. Cowley
T. J. Fowler
L. E. Hunt
J. C. Murphy
A. L. Newberry
D. J. Painter
D. J. Pinell
J. R. Richter
J. A. Rolston
V. Sanchez
B. F. Shelley
J. H. Skaggs
P. R. Wilt
D. O. Yancey, Jr.

SUBCOMMITTEE ON NUCLEAR INSERVICE INSPECTION (SC XI)

R. E. Gimple, *Chair*
R. L. Dyle, *Vice Chair*
O. Martinez, *Secretary*
W. H. Bamford, Jr.
R. L. Beverly
J. M. Bloom
C. D. Cowfer
D. D. Davis
T. N. Epps III
E. L. Farrow
F. E. Gregor
O. F. Hedden
W. C. Holston
K. Iida
R. D. Kerr
D. F. Landers
T. F. Lentz
J. T. Lindberg
G. C. Millman
G. C. Park
P. C. Riccardella
A. T. Roberts III
L. Sage
F. J. Schaaf, Jr.
R. J. Scott
J. E. Staffiera
R. W. Swayne
R. A. Yonekawa
K. K. Yoon
W. E. Norris, *Alternate*

Honorary Members (SC XI)

S. H. Bush
L. J. Chockie
J. P. Houstrup
L. R. Katz
R. R. MacCary

Subgroup on Evaluation Standards (SC XI)

W. H. Bamford, Jr., *Chair*
J. M. Bloom
R. C. Cipolla
R. M. Gamble
T. J. Griesbach
K. Hasegawa
P. J. Hijeck
D. N. Hopkins
K. Iida
Y. Imamura
J. G. Merkle
S. Ranganath
P. C. Riccardella
D. A. Scarth
W. L. Server
C. A. Tomes
A. Van Der Sluys
K. R. Wichman
G. M. Wilkowski
K. K. Yoon
S. Yukawa

Working Group on Flaw Evaluation (SG-ES) (SC XI)

R. C. Cipolla, *Chair*
G. H. De Boo, *Secretary*
W. H. Bamford, Jr.
M. Basol
J. M. Bloom
E. Friedman
T. J. Griesbach
F. D. Hayes
D. N. Hopkins
K. Iida
Y. Imamura
M. Kupinski
H. S. Mehta
J. G. Merkle
J. S. Panesar
S. Ranganath
D. A. Scarth
T. S. Schurman
W. L. Server
F. A. Simonen
K. R. Wichman
G. M. Wilkowski
K. K. Yoon
S. Yukawa
A. Zahoor
V. A. Zilberstein

Working Group on Operating Plant Criteria (SG-ES) (SC XI)

T. J. Griesbach, *Chair*
W. H. Bamford, Jr.
H. Behnke
B. A. Bishop
W. F. Brady
E. Friedman
S. R. Gosselin
E. M. Hackett
P. J. Hijeck
M. Kupinski
S. D. Leshnoff
P. Manbeck
H. S. Mehta
R. Pace
J. S. Panesar
W. E. Pennell
S. Ranganath
S. T. Rosinski
W. L. Server
E. A. Siegel
F. A. Simonen
G. L. Stevens
K. K. Yoon
S. Yukawa

Working Group on Pipe Flaw Evaluation (SG-ES) (SC XI)

D. A. Scarth, *Chair*
G. M. Wilkowski, *Secretary*
W. H. Bamford, Jr.
R. C. Cipolla
N. G. Cofie
S. K. Daftuar
G. H. De Boo
E. Friedman
L. F. Goyette
K. Hasegawa
D. N. Hopkins
K. Iida
K. K. Kashima
H. S. Mehta
J. S. Panesar
K. K. Yoon
S. Yukawa
A. Zahoor
V. A. Zilberstein

Subgroup on Liquid-Metal–Cooled Systems (SC XI)

C. G. McCargar, *Chair*
W. L. Chase
S. Hattori
R. Hundal
R. W. King
W. Kwant

Working Group on Liquid-Metal Reactor Covers (SG-LMCS) (SC XI)

W. L. Chase, *Chair*
S. Hattori
R. Hundal

Subgroup on Nondestructive Examination (SC XI)

C. D. Cowfer, *Chair*
N. R. Bentley, *Secretary*
D. C. Adamonis
B. Bevins
F. T. Carr
C. B. Cheezem
W. T. Clayton
F. J. Dodd
T. N. Epps III
D. O. Henry
M. R. Hum
G. A. Lofthus
M. C. Modes
F. J. Schaaf, Jr.
M. F. Sherwin
J. C. Spanner, Jr.
C. J. Wirtz

Working Group on Personnel Qualification and Surface, Visual, and Eddy Current Examination (SG-NDE) (SC XI)

J. C. Spanner, Jr., *Chair*
C. J. Wirtz, *Secretary*
B. L. Curtis
D. O. Henry
H. E. Houserman
J. J. McArdle III
M. F. Sherwin
D. Spake
D. S. Whitcomb

Working Group on Pressure Testing (SG-NDE) (SC XI)

D. W. Lamond, *Chair*
T. M. Anselmi
J. M. Boughman
T. R. Bugelholl
R. J. Cimoch
G. L. Fechter
J. K. McClanahan

Working Group on Procedure Qualification and Volumetric Examination (SG-NDE) (SC XI)

M. C. Modes, *Chair*
B. Bevins, *Secretary*
D. C. Adamonis
F. L. Becker
N. R. Bentley
F. T. Carr
C. B. Cheezem
W. T. Clayton
S. R. Doctor
F. J. Dodd
T. N. Epps III
B. Kellerhall
G. A. Lofthus
M. Saporito
S. M. Walker

Subgroup on Repairs, Replacements, and Modifications (SC XI)

W. C. Holston, *Chair*
D. E. Waskey, *Secretary*
M. N. Bressler
R. E. Cantrell
R. E. Gimple
C. E. Hartz
R. A. Hermann
T. E. Hiss
R. D. Kerr
D. F. Landers
R. S. Lewis
M. S. McDonald
R. R. Stevenson
R. W. Swayne
R. A. Yonekawa

Working Group on Design Reconciliation (SG-RR&M) (SC XI)

T. E. Hiss, *Chair*
J. T. Conner, *Secretary*
S. B. Brown
W. C. Holston
E. V. Imbro
D. F. Landers
R. W. Swayne
A. H. Taufique

Working Group on Responsibilities and Program Requirements (SG-RR&M) (SC XI)

R. A. Yonekawa, *Chair*
R. R. Stevenson, *Secretary*
S. K. Fisher
G. M. Foster
R. D. Graham
C. E. Hartz
R. S. Lewis
M. S. McDonald
S. M. Swilley
A. J. Walcutt
J. Ghergurovich, *Alternate*

Working Group on Welding and Special Repair Processes (SG-RR&M) (SC XI)

D. E. Waskey, *Chair*
R. E. Cantrell, *Secretary*
P. D. Fisher
A. J. Giannuzzi
R. A. Hermann
R. P. Indap
R. D. Kerr
B. R. Newton
P. P. Norris
J. E. O'Sullivan
K. R. Willens

Subgroup on Water-Cooled Systems (SC XI)

G. C. Park, *Chair*
K. B. Thomas, *Secretary*
J. M. Agold
G. L. Belew
W. J. Briggs
T. R. Bugelholl
D. D. Davis
R. L. Dyle
E. L. Farrow
O. F. Hedden
M. L. Herrera
T. C. Hinkle
S. D. Kulat
D. W. Lamond
T. F. Lentz
J. T. Lindberg
M. P. Lintz
W. E. Norris
C. Pendleton
E. Throckmorton
S. M. Walker
R. A. West
J. Whitman
H. Graves, *Alternate*
R. M. Kenneally, *Alternate*

Working Group on Containment (SG-WCS) (SC XI)

J. E. Staffiera, *Chair*
H. M. Stephens, *Secretary*
H. G. Ashar
W. J. Briggs
K. K. N. Chao
M. J. Ferlisi
H. Graves
H. T. Hill
R. D. Hough
C. N. Krishnaswamy
M. P. Lintz
D. Naus
S. C. Petitgout
G. W. Robin
R. T. Zak
W. E. Norris, *Alternate*

Working Group on Implementation of Risk-Based Examination (SG-WCS) (SC XI)

S. D. Kulat, *Chair*
J. M. Agold, *Secretary*
S. A. Ali
B. A. Bishop
J. W. Connor
H. Q. Do
R. Fougerousse
S. R. Gosselin
M. R. Graybeal
M. L. Herrera
J. T. Lindberg
I. Mach
R. K. Mattu
A. McNeill III
P. J. O'Regan
J. H. Phillips
F. A. Simonen
T. V. Vo
R. A. West

Working Group on Inspection of Systems and Components (SG-WCS) (SC XI)

C. D. Cowfer, *Chair*
J. Whitman, *Secretary*
G. L. Belew
H. Q. Do
R. Fougerousse
T. C. Hinkle
M. R. Hum
S. D. Kulat
J. T. Lindberg
I. Mach
T. K. McLellan
C. Pendleton
C. M. Ross
D. Song
K. B. Thomas
E. Throckmorton
R. A. West

Working Group on General Requirements (SC XI)

A. T. Roberts III, *Chair*
R. G. Edl, *Secretary*
D. A. Graham
D. A. Jackson
R. K. Mattu
L. Sage
R. J. Scott

Special Working Group on Editing and Review (SC XI)

R. W. Swayne, *Chair*
R. L. Beverly
M. P. Lintz
J. E. Staffiera
C. J. Wirtz

Special Working Group on Plant Life Extension (SC XI)

F. E. Gregor, *Chair*
M. P. Lintz, *Secretary*
T. M. Anselmi
W. F. Brady
D. D. Davis
D. A. Graham
D. L. Harrison
P.-T. Kuo
T. A. Meyer
D. W. Peltola
D. A. Piccione
V. N. Shah

SUBCOMMITTEE ON TRANSPORT TANKS (SC XII)

A. Selz, *Chair*
P. D. Stumpf, *Secretary*
A. N. Antoniou
C. Becht IV
M. Hennemand
C. H. Hochman
G. G. Karcher
P. P. Laluc
G. McRae
M. R. Minick
J. W. Rader
M. D. Rana
C. M. Serratella
S. Staniszewski
G. R. Stoeckinger
N. Surtees
A. P. Varghese
S. V. Voorhees
C. H. Walters
W. L. White

Subgroup on Design and Materials (SC XII)

M. D. Rana, *Chair*
C. Becht IV
D. A. Canonico
W. D. Doty
G. G. Karcher
P. P. Laluc
M. Manikkam
S. L. McWilliams
T. P. Pastor
J. L. Rademacher
T. A. Rogers
C. M. Serratella
A. P. Varghese
M. R. Ward
E. A. Whittle

Subgroup on Fabrication and Inspection (SC XII)

S. V. Voorhees, *Chair*
M. Burch
D. A. Canonico
M. L. Coats
B. L. Gehl
M. Hennemand
L. D. Holsinger
D. J. Kreft
G. McRae
M. R. Minick
N. Surtees

Subgroup on General Requirements (SC XII)

C. H. Hochman, *Chair*
T. Alexander
A. N. Antoniou
J. F. Cannon
J. L. Freiler
M. A. Garrett
K. L. Gilmore
J. C. Keenan
T. B. Lee
F. A. Licari
G. R. Stoeckinger
C. H. Walters
W. L. White
L. Wolpert

SUBCOMMITTEE ON BOILER AND PRESSURE VESSEL ACCREDITATION (SC-BPVA)

A. J. Spencer, *Chair*
C. E. Ford, *Vice Chair*
K. I. Baron, *Secretary*
M. B. Doherty
D. A. Douin
P. D. Edwards
R. M. Elliott
R. G. Friend
R. C. Howard
A. J. Justin
B. B. MacDonald
M. L. Sisk
B. C. Turczynski
R. L. Williams
W. J. Bees, *Alternate*
V. A. Bell, *Alternate*
V. Bogosian, *Alternate*
M. A. De Vries, *Alternate*
P. D. Flenner, *Alternate*
L. J. Kuchera, *Alternate*
W. C. LaRochelle, *Alternate*
K. M. McTague, *Alternate*
G. P. Milley, *Alternate*
P. G. Scheckermann, *Alternate*
N. Surtees, *Alternate*

SUBCOMMITTEE ON NUCLEAR ACCREDITATION (SC-NA)

T. E. Quaka, *Chair*
R. R. Stevenson, *Vice Chair*
F. E. Zusman, *Secretary*
V. Bogosian
M. N. Bressler
G. Deily
F. R. Drahos
J. E. Harris
M. Higuchi
M. Kotb
W. C. LaRochelle
R. P. McIntyre
H. B. Prasse
A. T. Roberts III
A. J. Spencer
R. E. Ciemiewicz, *Alternate*
S. Dasgupta, *Alternate*
P. D. Edwards, *Alternate*
S. M. Goodwin, *Alternate*
D. H. Hanrath, *Alternate*
R. C. Howard, *Alternate*
K. A. Huber, *Alternate*
A. J. Justin, *Alternate*
N. C. Kist, *Alternate*
A. A. Lotfi, *Alternate*
O. E. Trapp, *Staff Representative*

SUBCOMMITTEE ON DESIGN (SC-D)

D. P. Jones, *Chair*
E. H. Maradiaga, *Secretary*
R. W. Barnes
C. Becht IV
G. G. Graven
R. W. Mikitka
U. R. Miller
W. J. O'Donnell
R. D. Schueler, Jr.
A. Selz

Subgroup on Design Analysis (SC-D)

M. R. Breach
P. J. Conlisk
J. L. Hechmer
G. L. Hollinger
D. P. Jones
A. Kalnins
W. J. Koves
O. Maekawa
E. L. Thomas, Jr.
R. A. Whipple

Subgroup on Elevated Temperature Design (SC-D)

C. Becht IV, *Chair*
J. M. Corum, *Secretary*
C. R. Brinkman
R. D. Campbell
D. S. Griffin
R. I. Jetter
C. Lawton
W. J. O'Donnell
D. A. Osage
J. S. Porowski
C. C. Schultz, Jr.
L. K. Severud
D. F. Shaw
A. L. Snow

Subgroup on Fatigue Strength (SC-D)

W. J. O'Donnell, *Chair*
P. R. Donavin
J. A. Hayward
J. L. Hechmer
D. P. Jones
G. Kharshafdjian
C. Lawton
S. Majumdar
M. J. Manjoine
J. Muscara
H. H. Ziada

Subgroup on Openings (SC-D)

R. W. Mikitka, *Secretary*
G. G. Graven
V. T. Hwang
R. B. Luney
J. P. Madden
D. R. Palmer
M. D. Rana
E. C. Rodabaugh

Special Working Group on Bolted Flanged Joints (SC-D)

R. W. Mikitka, *Chair*
G. D. Bibel
E. Michalopoulos
S. N. Pagay
P. G. Scheckermann
R. W. Schneider
R. D. Schueler, Jr.
A. Selz

SUBCOMMITTEE ON SAFETY VALVE REQUIREMENTS (SC-SVR)

M. D. Bernstein, *Chair*
U. D'Urso, *Secretary*
J. F. Ball
S. Cammeresi
J. A. Cox
R. D. Danzy
D. B. De Michael
R. J. Doelling
R. G. Friend
H. I. Gregg
S. F. Harrison, Jr.
W. F. Hart
H. D. Michael
C. A. Neumann
D. K. Peetz
J. W. Reynolds
D. J. Scallan
A. J. Spencer
J. C. Standfast
J. A. West
T. J. Ferrigan, *Alternate*

Subgroup on Design (SC-SVR)

R. G. Friend, *Chair*
R. D. Danzy
D. B. De Michael
R. J. Doelling
H. I. Gregg
S. R. Irvin, Sr.
A. J. Spencer
T. R. Tarbay
J. A. West

Subgroup on General Requirements (SC-SVR)

M. D. Bernstein, *Chair*
J. F. Ball
R. E. Cellemme, Jr.
J. P. Glaspie
H. D. Michael
C. A. Neumann
D. K. Peetz
J. W. Reynolds
J. W. Richardson
J. C. Standfast

Subgroup on Testing (SC-SVR)

S. F. Harrison, Jr., *Chair*
S. Cammeresi
J. A. Cox
W. F. Hart
D. J. Scallan
B. S. York

PERSONNEL

Officers of AWS Committee

(Cooperating in the Development of the Specifications Herein)

As of December 31, 2000

A5 COMMITTEE ON FILLER METALS AND ALLIED MATERIALS

R. A. LaFave, *Chair*
D. A. Fink, *1st Vice Chair*
J. S. Lee, *2nd Vice Chair*
R. Gupta, *Secretary*
R. L. Bateman
J. M. Blackburn
B. S. Blum
J. Caprarola, Jr.
A. Chatterjee
R. J. Christoffel
G. Crisi
D. D. Crockett
R. A. Daemen
J. DeVito
D. A. DelSignore
H. W. Ebert
J. G. Feldstein
S. E. Ferree
R. D. Fuchs
C. E. Fuerstenau
J. A. Henning
J. P. Hunt
M. Q. Johnson
R. B. Kadilaya
S. D. Kiser
P. J. Konkol
D. J. Kotecki
D. Y. Ku
A. S. Laurenson
G. H. MacShane
W. A. Marttila
R. Menon
M. T. Merlo
A. R. Mertes
M. D. Morin
C. L. Null
M. P. Parekh
R. L. Peaslee
M. A. Quintana
S. D. Reynolds, Jr.
L. F. Roberts
P. K. Salvesen
A. P. Seidler
W. S. Severance
E. R. Stevens
E. S. Surian
R. A. Swain
R. D. Thomas, Jr.
K. P. Thornberry
S. Tsutsumi
L. T. Vernam
G. J. Vytanovych
T. R. Warren
H. D. Wehr
F. J. Winsor
K. G. Wold
J. B. C. Wu

A5X EXECUTIVE SUBCOMMITTEE

R. A. LaFave, *Chair*
D. A. Fink, *1st Vice Chair*
J. S. Lee, *2nd Vice Chair*
R. Gupta, *Secretary*
D. A. DelSignore
H. W. Ebert
R. D. Fuchs
D. J. Kotecki
R. Menon
R. L. Peaslee
L. T. Vernam

A5A SUBCOMMITTEE ON CARBON AND LOW ALLOY STEEL ELECTRODES AND RODS FOR SHIELDED METAL ARC AND OXYFUEL GAS WELDING

L. F. Roberts, *Chair*
G. L. Franke, *Vice Chair*
R. Gupta, *Secretary*
R. M. Burt
J. J. DeLoach
C. L. Null
M. P. Parekh
L. J. Privoznik
P. K. Salvesen
M. S. Sierdzinski
H. W. Ebert
A. L. Gombach
K. K. Gupta
D. J. Kotecki
R. A. LaFave
A. H. Miller
R. A. Swain
R. D. Thomas, Jr.
S. Tsutsumi
M. D. Tumuluru
G. J. Vytanovych

A5B SUBCOMMITTEE ON CARBON AND LOW ALLOY STEEL ELECTRODES AND FLUXES FOR SUBMERGED ARC WELDING

D. D. Crockett, *Chair*
R. Gupta, *Secretary*
G. C. Barnes
H. P. Beck
W. D. Doty
H. W. Ebert
R. D. Fuchs
D. Y. Ku
R. A. LaFave
M. T. Merlo
D. W. Meyer
J. C. Meyers
M. D. Morin
C. L. Null
D. M. Parker
F. A. Rhoades
L. F. Roberts
R. A. Swain
R. D. Thomas, Jr.
S. Tsutsumi

A5C SUBCOMMITTEE ON ALUMINUM ALLOY FILLER METALS

L. T. Vernam, *Chair*
N. Dietzen, *Vice Chair*
R. Gupta, *Secretary*
B. E. Anderson
S. A. Collins
P. B. Dickerson
S. Gedeon
R. M. Henson
G. M. Hergenrather
R. A. LaFave
J. S. Lee
G. H. Musselman
C. L. Null
E. R. Pickering
R. D. Thomas, Jr.
D. A. Wright, Sr.
V. van der Mee

A5D SUBCOMMITTEE ON STAINLESS STEEL FILLER METALS

D. A. DelSignore, *Chair*
D. J. Kotecki, *Vice Chair*
R. Gupta, *Secretary*
R. S. Brown
R. E. Cantrell
R. J. Christoffel
J. G. Feldstein
R. D. Fuchs
J. A. Henning
J. P. Hunt
S. R. Jana
R. B. Kadilaya
D. E. Kaminski
G. A. Kurisky
R. A. LaFave
F. B. Lake
G. H. MacShane
M. T. Merlo
J. C. Meyers
C. L. Null
R. A. Swain
R. D. Thomas, Jr.
S. Tsutsumi
J. G. Wallin
H. D. Wehr

A5E SUBCOMMITTEE ON NICKEL AND NICKEL ALLOY FILLER METALS

R. D. Fuchs, *Chair*
J. S. Lee, *1st Vice Chair*
R. Gupta, *Secretary*
D. C. Agarwal
F. S. Babish
R. S. Brown
R. E. Cantrell
D. A. DelSignore
P. Ditzel
D. L. Duncan
J. F. Frawley
V. W. Hartmann
J. P. Hunt
R. B. Kadilaya
D. D. Kiilunen
S. D. Kiser
G. A. Kurisky
R. A. LaFave
F. B. Lake
R. Menon
C. L. Null
R. A. Swain
R. D. Thomas, Jr.
S. Tsutsumi
J. F. Turner
V. van der Mee
H. D. Wehr
J. B. C. Wu

A5F SUBCOMMITTEE ON COPPER AND COPPER ALLOY FILLER METALS

K. P. Thornberry, *Chair*
R. Gupta, *Secretary*
C. W. Dralle
D. B. Holliday
J. P. Hunt
R. A. LaFave
A. R. Mertes
C. L. Null
S. D. Reynolds, Jr.
M. N. Rogers
R. D. Thomas, Jr.
J. Turriff

A5G SUBCOMMITTEE ON HARDFACING FILLER METALS

R. Menon, *Chair*
R. Gupta, *Secretary*
F. Broshjeit
D. D. Crockett
G. L. Fillion
S. P. Iyer
S. R. Jana
R. A. LaFave
W. E. Layo
G. H. MacShane
S. J. Merrick
A. R. Mertes
C. L. Null
J. G. Postle
V. B. Rajan
G. C. Schmid
E. R. Stevens
R. D. Thomas, Jr.
J. B. C. Wu

A5H SUBCOMMITTEE ON FILLER METALS AND FLUXES FOR BRAZING

C. E. Fuerstenau, *Chair*
R. Gupta, *Secretary*
G. A. Andreano
Y. Baskin
R. E. Cook
T. P. Hirthe
T. A. Kern
R. A. LaFave
M. J. Lucas, Jr.
J. A. Miller
C. L. Null
R. L. Peaslee
C. W. Philp
C. B. Pollock
W. D. Rupert
J. L. Schuster
A. Severin
J. J. Stephens
R. D. Thomas, Jr.
K. P. Thornberry

A5I SUBCOMMITTEE ON TUNGSTEN ELECTRODES

W. S. Severance, *Chair*
R. Gupta, *Secretary*
S. G. Caldwell
R. J. Christoffel
M. E. Gedgaudas
J. E. Heinzman III
J. K. Kyne
R. A. LaFave
C. L. Null
G. R. Patrick
R. D. Thomas, Jr.
M. D. Tumuluru
W. D. Watson

A5J SUBCOMMITTEE ON ELECTRODES AND RODS FOR WELDING CAST IRON

S. D. Kiser, *Chair*
R. Gupta, *Secretary*
R. G. Bartifay
R. A. Bishel
R. A. Bushey
R. O. Drossman
E. R. Kuch
R. A. LaFave
A. H. Miller
L. W. Myers
C. L. Null
W. F. Ridgway
R. D. Thomas, Jr.

A5K SUBCOMMITTEE ON TITANIUM AND ZIRCONIUM FILLER METALS

A. P. Seidler, *Chair*
R. C. Sutherlin, *Vice Chair*
R. Gupta, *Secretary*
S. G. Caldwell
D. D. Harwig
S. Kleppen
H. Kotaki
R. A. LaFave
S. L. Luckowski
C. L. Null
J. Richardson
J. Scheltens
R. D. Thomas, Jr.
M. E. Wells

A5L SUBCOMMITTEE ON MAGNESIUM ALLOY FILLER METALS

K. P. Thornberry, *Chair*
R. Gupta, *Secretary*
J. F. Brown, Jr.
A. T. D'Annessa
P. B. Dickerson
R. A. LaFave
C. L. Null
R. D. Thomas, Jr.

A5M SUBCOMMITTEE ON CARBON AND LOW ALLOY STEEL ELECTRODES FOR FLUX CORED ARC WELDING

M. T. Merlo, *Chair*
D. D. Crockett, *1st Vice Chair*
R. Gupta, *Secretary*
J. C. Bundy
J. E. Campbell
A. Chatterjee
D. D. Childs
E. F. Craig
L. A. Craig
J. J. DeLoach
S. E. Ferree
G. L. Franke
M. Q. Johnson
R. A. LaFave
G. H. MacShane
C. L. Null
M. P. Parekh
L. F. Roberts
K. Stump
R. A. Swain
R. D. Thomas, Jr.
S. Tsutsumi
T. R. Warren

A5MILSPEC AD-HOC COMMITTEE ON CONVERSION OF MILITARY SPECIFICATIONS TO AWS FILLER METAL SPECIFICATIONS

C. L. Null, *Chair*
J. J. DeLoach, *1st Vice Chair*
R. Gupta, *Secretary*
H. R. Castner
S. E. Ferree
D. A. Fink
J. J. Gullotti
W. Hanzalek
P. J. Konkol
J. A. Manuel
J. M. Sawhill
T. R. Warren

A5N SUBCOMMITTEE ON CONSUMABLE INSERTS

H. D. Wehr, *Chair*
R. Gupta, *Secretary*
R. A. LaFave
A. S. Laurenson
C. L. Null
R. D. Thomas, Jr.

A5O SUBCOMMITTEE ON CARBON AND LOW ALLLOY STEEL ELECTRODES AND RODS FOR GAS SHIELDED ARC WELDING

D. A. Fink, *Chair*
J. C. Bundy, *1st Vice Chair*
M. T. Merlo, *2nd Vice Chair*
R. Gupta, *Secretary*
P. R. Grainger
R. B. Kadilaya
P. J. Konkol
R. A. LaFave
C. L. Null
M. P. Parekh
D. M. Parker
L. J. Privoznik
P. D. Regrut
L. F. Roberts
R. B. Smith
R. D. Thomas, Jr.
S. Tsutsumi
C. R. Webb
D. A. Wright, Sr.

A5P SUBCOMMITTEE ON CARBON AND LOW ALLOY STEEL ELECTRODES FOR ELECTROSLAG AND ELECTROGAS WELDING

D. A. Fink, *Chair*
R. Gupta, *Secretary*
J. H. Devletian
R. H. Juers
W. M. Kavicky
D. Y. Ku
R. A. LaFave
J. S. Lee
C. L. Null
L. F. Roberts
B. L. Shultz
L. D. Smith
R. D. Thomas, Jr.

A5S SUBCOMMITTEE ON GASES FOR GAS SHIELDED ARC WELDING AND CUTTING

J. DeVito, *Chair*
R. Gupta, *Secretary*
E. Colvin
J. F. Donaghy
J. R. Evans
G. Harvey
R. A. LaFave
M. McKeown
C. L. Null
L. R. Pate
E. R. Pierre
J. B. Ridenfeldt
D. M. Sullivan
R. D. Thomas, Jr.
J. Zawodny

A5T SUBCOMMITTEE ON FILLER METAL PROCUREMENT GUIDELINES

R. A. LaFave, *Chair*
R. Gupta, *Secretary*
J. Caprarola, Jr.
D. A. Fink
M. L. Mehta
M. T. Merlo
C. L. Null
C. C. Paquette
L. F. Roberts
P. K. Salvesen
R. A. Swain
R. D. Thomas, Jr.
V. van der Mee

A5U SUBCOMMITTEE ON SURFACING MATERIALS FOR THERMAL SPRAYING

J. B. C. Wu, *Chair*
R. Gupta, *Secretary*
W. J. Arata
G. A. Croopnick
M. R. Dorfman
R. A. Douty
G. L. Fillion
F. J. Hermanek
R. A. LaFave
D. D. Lewisen
C. L. Null
S. Rangaswamy
E. R. Sampson
J. L. Scott
E. R. Stevens
R. A. Sulit
R. D. Thomas, Jr.
L. T. Vernam

A5W SUBCOMMITTEE ON MOISTURE AND HYDROGEN

J. M. Blackburn, *Chair*
R. Gupta, *Secretary*
A. E. Comeau
D. M. Fedor
D. A. Fink
G. L. Franke
D. D. Harwig
R. A. LaFave
J. S. Lee
C. L. Null
M. P. Parekh
M. A. Quintana
M. S. Sierdzinski
K. Smith
R. D. Thomas, Jr.
M. Weare
H. D. Wehr

A5Y SUBCOMMITTEE ON FLUXES FOR GAS TUNGSTEN ARC WELDING AND WELDABLE PRIMER COATINGS

M. Q. Johnson, *Chair*
R. Gupta, *Secretary*

PREFACE

On January 3, 1919, ASME participated with several other organizations in a meeting to discuss the continuation of wartime research in welding. Out of that meeting, the American Welding Society was established and since that time there has been a constant and interwoven record of development by the American Welding Society and The American Society of Mechanical Engineers of the techniques of welding. Through all of these great years of growth, many of the leaders in the field of engineering had the common interest of pressure equipment design and manufacture and the development of welding as a powerful tool in that manufacture. The evolution of this cooperative effort is contained in Professor A. M. Greene's "History of the ASME Boiler Code," which was published as a series of articles in *Mechanical Engineering* from July 1952 through August 1953 and is now available from ASME in a special bound edition. The following quotation from this history based on the minutes of the Committee notes the cooperative nature of the work done in the area of welding.

"During 1919, a number of cases involving welding were referred by the Boiler Code Committee to the Subcommittee on Welding.

"As the National Welding Council was to be discontinued, a new organization was to be formed to be known as the American Welding Society with which the American Bureau of Welding was to be affiliated. This was to be a body representing the entire industry and would eliminate commercial aspects, undertake research and standardization, and act as a judicial body providing a medium for advancing the science and art of welding."

In 1935 the AWS-ASTM Joint Committee on Filler Metal was organized to provide standard specifications for welding rods, electrodes, filler metals, and fluxes for this developing U.S. industry.

In 1969 these two sponsors agreed to dissolve this joint activity and to permit the American Welding Society to assume sole responsibility for the family of welding rods, electrodes, filler metal, and flux specifications then in being.

In 1992, the ASME Board of Pressure Technology Codes and Standards endorsed the use of materials produced to other than AWS specifications. It is the intent of ASME to follow its procedures and practices curently in use to implement the adoption of material specifications of AWS and other recognized national or international organizations.

Section II, Part C, contains material specifications, most of which are identical to corresponding specifications published by AWS and other recognized national or international organizations. All adopted specifications are either reproduced in the Code, where permission to do so has been obtained from the originating organization, or so referenced, and information about how to obtain them from the originating organization is provided. The ASME Committee reviews all material specifications submitted to it and if it is felt that there is any need to adapt them for Code purposes, revisions are made to them. However, there is constant liaison between ASME and AWS and other recognized national or international organizations, and there will be continuing effort to see that the specifications as produced by AWS and other recognized national or international organizations and those printed in the ASME Code are identical.

To assure that there will be a clear understanding on the part of the users of Section II, ASME publishes both the identical specifications and those amended for Code usage in three parts every three years, in the same page size to match the other Sections of the Code, and Addenda are issued annually to provide the latest changes in Section II specifications.

The ASME Boiler and Pressure Vessel Code has been adopted into law by 48 states and many municipalities in the United States and by all of the Canadian Provinces.

APPENDIX I — MANDATORY PREPARATION OF TECHNICAL INQUIRIES TO THE BOILER AND PRESSURE VESSEL COMMITTEE

I-100 INTRODUCTION

The ASME Boiler and Pressure Vessel Committee meets regularly to consider written requests for interpretations and revisions to the Code rules, and to develop new rules as dictated by technological development. The Committee's activities in this regard are limited strictly to interpretations of the rules or to the consideration of revisions to the present rules on the basis of new data or technology. As a matter of published policy, ASME does not approve, certify, rate, or endorse any item, construction, proprietary device, or activity, and, accordingly, inquiries requiring such consideration will be returned. Moreover, ASME does not act as a consultant on specific engineering problems or on the general application or understanding of the Code rules. If, based on the inquiry information submitted, it is the opinion of the Committee that the inquirer should seek assistance, the inquiry will be returned with the recommendation that such assistance be obtained.

All inquiries that do not provide the information needed for the Committee's full understanding will be returned.

I-200 INQUIRY FORMAT

Inquiries shall be limited strictly to interpretations of the rules or to the consideration of revisions to the present rules on the basis of new data or technology. Inquiries shall be submitted in the following format.

(a) Scope. Involve a single rule or closely related rules. An inquiry letter concerning unrelated subjects will be returned.

(b) Background. State the purpose of the inquiry, which would be either to obtain an interpretation of Code rules, or to propose consideration of a revision to the present rules. Provide concisely the information needed for the Committee's understanding of the inquiry, being sure to include reference to the applicable Code Section, Division, Edition, Addenda, paragraphs, figures, and tables. If sketches are provided, they shall be limited to the scope of the inquiry.

(c) Inquiry Structure. Prepare statements in a condensed and precise question format, omitting superfluous background information, and, where appropriate, composed in such a way that "yes" or "no" (perhaps with provisos) would be an acceptable reply. This inquiry statement should be technically and editorially correct.

(d) Proposed Reply. State what it is believed that the Code requires. If in the inquirer's opinion a revision to the Code is needed, recommended wording shall be provided.

I-300 SUBMITTAL

Inquiries shall preferably be submitted in typewritten form; however, legible handwritten inquiries will also be considered. They shall include the name and mailing address of the inquirer, and be mailed to the following address:

Secretary
ASME Boiler and Pressure Vessel Committee
Three Park Avenue
New York, NY 10016-5990

SI UNITS

The 2001 Edition of the Boiler and Pressure Vessel Code is based on U.S. Customary (ft-lb) units of measurement which are to be regarded as the standard. This supplement is provided as a convenience to the Code user and contains SI conversion factors for units contained in the Code.

LIST OF SI UNITS FOR USE WITH ASME BOILER AND PRESSURE VESSEL CODE[1]

Quantity	Unit	Symbol	Other Units or Limitations
Space and Time			
plane angle	radian	rad	degree (decimalized)
length	meter	m	
area	square meter	m^2	
volume	cubic meter	m^3	liter (L) for liquid only (use without prefix other than in milliliter, mL)
time	second	s	minute (min), hour (h), day (d), week, and year
Periodic and Related Phenomena			
frequency	hertz	Hz	revolutions per second (r/s)
rotational frequency	revolutions per second	s^{-1}	revolutions per minute (r/m)
Mechanics			
mass	kilogram	kg	
density	kilogram per cubic meter	kg/m^3	
moment of inertia	kilogram · $meter^2$	$kg \cdot m^2$	
force	newton	N	
moment of force (torque)	newton-meter	$N \cdot m$	
pressure and stress	pascal	Pa	(pascal = newton per square meter)
energy, work	joule	J	kilowatt-hour (kW · h)
power	watt	W	
impact strength	joule	J	
section modulus	$meter^3$	m^3	
moment of section (second moment of area)	$meter^4$	m^4	
fracture toughness	$Pa \cdot \sqrt{m}$		
Heat			
temperature — thermodynamic [Note (2)]	kelvin	K	degree Celsius (°C)
temperature — other than thermodynamic	degree Celsius	°C	kelvin (K)
linear expansion coefficient	meter per meter-kelvin	K^{-1}	$°C^{-1}$
quantity of heat	joule	J	
heat flow rate	watt	W	
thermal conductivity	watt per meter-kelvin	$W/(m \cdot K)$	$W/(m \cdot °C)$
thermal diffusivity	square meter per second	m^2/s	
specific heat capacity	joule per kilogram-kelvin	$J/(kg \cdot K)$	$J/(kg \cdot °C)$
Electricity and Magnetism			
electric current	ampere	A	
electric potential	volt	V	
current density	ampere per $meter^2$	A/m^2	
magnetic field strength	ampere per meter	A/m	

NOTES:

(1) Conversion factors between SI units and U.S. customary are given in SI-1, "ASME Orientation and Guide for Use of SI (Metric) Units," and ASTM E 380.

(2) Preferred use for temperature and temperature interval is degrees Celsius (°C), except for thermodynamic and cryogenic work where kelvins may be more suitable. For temperature interval, 1 K = 1°C exactly.

COMMONLY USED CONVERSION FACTORS
(For Others See ASTM E 380) [See Note (1)]

Quantity	To Convert From	To	Multiply by [Note (2)]	
plane angle	degree	rad	1.745 329	E−02
length	in	m	2.54*	E−02
	ft	m	3.048*	E−01
	yd	m	9.144*	E−01
area	in^2	m^2	6.451 6*	E−04
	ft^2	m^2	9.290 304*	E−02
	yd^2	m^2	8.361 274	E−01
volume	in^3	m^3	1.638 706	E−05
	ft^3	m^3	2.831 685	E−02
	US gallon	m^3	3.785 412	E−03
	Imperial gallon	m^3	4.546 09	E−03
	liter	m^3	1.0*	E−03
mass	lbm	kg	4.535 924	E−01
	ton (metric) (mass)	kg	1.000 00*	E+03
	ton (short 2000 lbm)	kg	9.071 847	E+02
force	kgf	N	9.806 65*	E+00
	lbf	N	4.448 222	E+00
bending, torque	kgf · m	N · m	9.806 65*	E+00
	lbf · in	N · m	1.129 848	E−01
	lbf · ft	N · m	1.355 818	E+00
pressure, stress	kgf/m^2	Pa	9.806 65*	E+00
	lbf/ft^2	Pa	4.788 026	E+01
	lbf/in^2 (psi)	Pa	6.894 757	E+03
	$kips/in^2$	Pa	6.894 757	E+06
	bar	Pa	1.0*	E+05
energy, work	Btu (IT) [Note (3)]	J	1.055 056	E+03
	ft · lbf	J	1.355 818	E+00
power	hp (550 ft · lbf/s)	W	7.456 999	E+02
fracture toughness	ksi $\sqrt{in}$	Pa · $\sqrt{m}$	1.098 843	E+06
temperature	°C	K	$t_K = t_C + 273.15$	
	°F	K	$t_K = (t_F + 459.67)/1.8$	
	°F	°C	$t_C = (t_F - 32)/1.8$	
temperature interval	°C	K	1.0*	E+00
	°F	K or °C	5.555 555	E−01

NOTES:
(1) Care should be taken when converting formulas or equations that contain constant terms or factors. The value of these terms must be understood and may also require conversion.
(2)(a) Relationships that are exact in terms of the base units are followed by a single asterisk.
(b) The factors are written as a number greater than 1 and less than 10 with 6 or less decimal places. The number is followed by the letter E (for exponent), a plus or minus symbol, and two digits which indicate the power of 10 by which the number must be multiplied to obtain the correct value. For example: 3.523 907 E−02 is $3.523\ 907 \times 10^{-2}$ or 0.035 239 07.
(3) International Table

The 2001 Edition of the Code contains both U.S. Customary and SI units. In all cases, the U.S. Customary units are the standard and SI units are provided for the convenience of the user.

SUMMARY OF CHANGES

The 2001 Edition of this Code contains revisions in addition to the 1998 Edition with 1999 and 2000 Addenda. The revisions are identified with the designation **01** in the margin and, as described in the Foreword, become mandatory six months after the publication date of the 2001 Edition. To invoke these revisions before their mandatory date, use the designation "2001 Edition" in documentation required by this Code. If you choose not to invoke these revisions before their mandatory date, use the designation "1998 Edition through the 2000 Addenda" in documentation required by this Code.

Changes given below are identified on the pages by a margin note, **01**, placed next to the affected area.

Page	*Location*	*Change*
v	Contents	Updated to reflect new titles in 01
229–255	SFA-5.10	Revised in its entirety
707–721	SFA-5.32	Added

SPECIFICATION FOR CARBON STEEL ELECTRODES FOR SHIELDED METAL ARC WELDING

SFA-5.1

(Identical with AWS Specification A5.1-91)

1. Scope

This specification prescribes requirements for the classification of carbon steel electrodes for shielded metal arc welding.

PART A — GENERAL REQUIREMENTS

2. Classification

2.1 The welding electrodes covered by this specification are classified according to the following:

(*1*) Type of current (see Table 1)

(*2*) Type of covering (see Table 1)

(*3*) Welding position (see Table 1)

(*4*) Mechanical properties of the weld metal in the as-welded or aged condition (see Tables 2 and 3)

2.2 Materials classified under one classification shall not be classified under any other classification of this specification, except that E7018M may also be classified as E7018 provided the electrode meets all of the requirements of both classifications.

3. Acceptance

Acceptance[1] of the welding electrodes shall be in accordance with the provisions of the ANSI/AWS A5.01, *Filler Metal Procurement Guidelines.*[2]

4. Certification

By affixing the AWS specification and classification designations to the packagings, or the classification to the product, the manufacturer certifies that the product meets the requirements of this specification.[3]

5. Units of Measure and Rounding-Off Procedure

5.1 U.S. Customary Units are the standard units of measure in this specification. The SI Units are given as equivalent values to the U.S. Customary Units. The standard sizes and dimensions in the two systems are not identical, and for this reason, conversion from a standard size or dimension in one system will not always coincide with a standard size or dimension in the other. Suitable conversions, encompassing standard sizes of both, can be made, however, if appropriate tolerances are applied in each case.

5.2 For the purpose of determining conformance with this specification, an observed or calculated value shall be rounded to the "nearest unit" of the last right-hand place of figures used in expressing the limiting value in accordance with the round-off method of ASTM Practice E29 for *Using Significant Digits in Test Data to Determine Conformance with Specifications.*[4]

---

[1] See A3 (in the Appendix) for further information concerning acceptance, testing of the material shipped, and ANSI/AWS A5.01 *Filler Metal Procurement Guidelines.*

[2] AWS standards can be obtained from the American Welding Society, 550 N.W. LeJeune Road, P.O. Box 351040, Miami, Florida 33135.

[3] See A4 (in the Appendix) for further information concerning certification and the testing called for to meet this requirement.

[4] ASTM standards can be obtained from the American Society for Testing and Materials, 100 Barr Harbor Drive, West Conshohocken, PA 19428-2959.

TABLE 1
ELECTRODE CLASSIFICATION

AWS Classification	Type of Covering	Welding Position[a]	Type of Current[b]
E6010	High cellulose sodium	F, V, OH, H	dcep
E6011	High cellulose potassium	F, V, OH, H	ac or dcep
E6012	High titania sodium	F, V, OH, H	ac or dcen
E6013	High titania potassium	F, V, OH, H	ac, dcep or dcen
E6019	Iron oxide titania potassium	F, V, OH, H	ac, dcep or dcen
E6020	High iron oxide	H-fillets	ac or dcen
		F	ac, dcep or dcen
E6022[c]	High iron oxide	F, H	ac or dcen
E6027	High iron oxide, iron powder	H-fillets	ac or dcen
		F	ac, dcep or dcen
E7014	Iron powder, titania	F, V, OH, H	ac, dcep or dcen
E7015[d]	Low hydrogen sodium	F, V, OH, H	dcep
E7016[d]	Low hydrogen potassium	F, V, OH, H	ac or dcep
E7018[d]	Low hydrogen potassium, iron powder	F, V, OH, H	ac or dcep
E7018M	Low hydrogen iron powder	F, V, OH, H	dcep
E7024[d]	Iron powder, titania	H-fillets, F	ac, dcep or dcen
E7027	High iron oxide, iron powder	H-fillets	ac or dcen
		F	ac, dcep or dcen
E7028[d]	Low hydrogen potassium, iron powder	H-fillets, F	ac or dcep
E7048[d]	Low hydrogen potassium, iron powder	F, V, OH, H, V-down	ac or dcep

Notes:
a. The abbreviations indicate the welding positions as follows:
F = Flat
H = Horizontal
H-fillets = Horizontal fillets
V-down = Vertical with downward progression

V = Vertical, OH = Overhead } For electrodes $^{3}/_{16}$ in. (4.8 mm) and under, except $^{5}/_{32}$ in. (4.0 mm) and under for classifications E7014, E7015, E7016, E7018, and E7018M.

b. The term "dcep" refers to direct current electrode positive (dc, reverse polarity). The term "dcen" refers to direct current electrode negative (dc, straight polarity).
c. Electrodes of the E6022 classification are intended for single-pass welds only.
d. Electrodes with supplemental elongation, notch toughness, absorbed moisture, and diffusible hydrogen requirements may be further identified as shown in Tables 2, 3, 10, and 11.

TABLE 2
TENSION TEST REQUIREMENTS[a,b,c]

AWS Classification	Tensile Strength		Yield Strength at 0.2% Offset		Elongation in 2 in. (50.8 mm) Percent
	ksi	MPa	ksi	MPA	
E6010	60	414	48	331	22
E6011	60	414	48	331	22
E6012	60	414	48	331	17
E6013	60	414	48	331	17
E6019	60	414	48	331	22
E6020	60	414	48	331	22
E6022[d]	60	414	not specified		not specified
E6027	60	414	48	331	22
E7014	70	482	58	399	17
E7015	70	482	58	399	22
E7016	70	482	58	399	22
E7018	70	482	58	399	22
E7024	70	482	58	399	17[e]
E7027	70	482	58	399	22
E7028	70	482	58	399	22
E7048	70	482	58	399	22
E7018M	note g	482	53–72[f]	365–496[f]	24

Notes:
a. See Table 4 for sizes to be tested.
b. Requirements are in the as-welded condition with aging as specified in 11.3.
c. Single values are minimum.
d. A transverse tension test, as specified in 11.2 and Figure 9 and a longitudinal guided bend test, as specified in Section 12, Bend Test, and Figure 10, are required.
e. Weld metal from electrodes identified as E7024-1 shall have elongation of 22% minimum.
f. For $^{3}/_{32}$ in. (2.4 mm) electrodes, the maximum for the yield strength shall be 77 ksi (531 MPa).
g. Tensile strength of this weld metal is a nominal 70 ksi (482 MPa).

PART B — TESTS, PROCEDURES, AND REQUIREMENTS

6. Summary of Tests

The tests required for each classification are specified in Table 4. The purpose of these tests is to determine the chemical composition, mechanical properties, and soundness of the weld metal; moisture content of the low hydrogen electrode covering; and the usability of the electrode. The base metal for the weld test assemblies, the welding and testing procedures to be employed, and the results required are given in Sections 8 through 17.

The supplemental tests for absorbed moisture, in Section 16, Absorbed Moisture Test, and diffusible hydrogen, in Section 17, Diffusible Hydrogen Test, are not required for classification of the low hydrogen electrodes except for E7018M, where these are required. See Notes j and n of Table 4.

7. Retest

If the results of any tests fail to meet the requirement, that test shall be repeated twice. The results of both tests shall meet the requirement. Specimens for retest may be taken from the original test assembly or from a new test assembly. For chemical analysis, retest need be only for those specific elements that failed to meet the test requirement.

8. Weld Test Assemblies

8.1 One or more of the following five weld test assemblies are required.

(*1*) The weld pad in Fig. 1 for chemical analysis of the undiluted weld metal

(*2*) The groove weld in Fig. 2 for mechanical properties and soundness of the weld metal

(*3*) The fillet weld in Fig. 3 for the usability of the electrode

TABLE 3
CHARPY V-NOTCH IMPACT REQUIREMENTS

AWS Classification	Limits for 3 out of 5 Specimens[a]	
	Average, Min.	Single Value, Min.
E6010, E6011, E6027, E7015, E7016[b], E7018[b], E7027, E70488	20 ft-lb at −20°F (27 J at − 29°C)	15 ft-lb at −20°F (20 J at −29°C)
E6019, E7028	20 ft-lb at 0°F (27 J at −18°C)	15 ft-lb at 0°F (20 J at −18°C)
E6012, E6013, E6020, E6022, E7014, E7024[b]	Not Specified	Not Specified
	Limits for 5 out of 5 Specimens[c]	
	Average, Min.	Single Value, Min.
E7018M	50 ft-lb at −20°F (67 J at −29°C)	40 ft-lb at − 20°F (54 J at −29°C)

NOTES:
a. Both the highest and lowest test values obtained shall be disregarded in computing the average. Two of these remaining three values shall equal or exceed 20 ft-lb (27 J).
b. Electrodes with the following optional supplemental designations shall meet the lower temperature impact requirements specified below.

AWS Classification	Electrode Designation	Charpy V-Notch Impact Requirements, Limits for 3 out of 5 specimens (Refer to Note a above)	
		Average, Min.	Single Value, Min.
E7016, E7018	E7016-1, E7018-1	20 ft-lb at −50°F (27 J at −46°C)	15 ft-lb at −50°F (20 J at −46°C)
E7024	E7024-1	20 ft-lb at 0°F (27 J at −18°C)	15 ft-lb at 0°F (20 J at −18°C)

c. All five values obtained shall be used in computing the average. Four of the five values shall equal, or exceed, 50 ft-lb (67 J).

(*4*) The groove weld in Fig. 4 for transverse tensile and longitudinal bend tests for welds made with the E6022 single pass electrode

(*5*) The groove weld in Fig. 5 for mechanical properties and soundness of weld metal made with the E7018M electrode

The sample for chemical analysis may be taken from a low dilution area either in the groove weld in Fig. 2 or 5 or in the fractured all-weld-metal tension test specimen, thereby avoiding the need to make a weld pad. In case of dispute, the weld pad shall be the referee method.

8.2 Preparation of each weld test assembly shall be as prescribed in 8.3 through 8.5. The base metal for each assembly shall be as required in Table 5 and shall meet the requirements of the ASTM specification shown there or an equivalent specification. Testing of

TABLE 4
REQUIRED TESTS[a,b]

AWS Classification	Current and Polarity[a]	Electrode Size[c] in.	Electrode Size[c] mm	Chemical[d] Analysis	Radiographic Test[e] All-Weld-Metal Tension Test[f]	Impact Test[g]	Fillet Weld Test[h]	Moisture Test[f]
E6010	dcep	3/32, 1/8	2.4, 3.2	NR	NR[b]	NR[b]	NR[b]	NR
		5/32, 3/16	4.0, 4.8	NR	F	F	V & OH	NR
		7/32	5.6	NR	NR[b]	NR[b]	NR[b]	NR
		1/4	6.4	NR	F	F	H	NR
		5/16	8.0	NR	F	NR[b]	NR[b]	NR
E6011	ac and dcep	3/32, 1/8	2.4, 3.2	NR	NR[b]	NR[b]	NR[b]	NR
		5/32, 3/16	4.0, 4.8	NR	F	F	V & OH	NR
		7/32	5.6	NR	NR[b]	NR[b]	NR[b]	NR
		1/4	6.4	NR	F	F	H	NR
E6012	ac and dcen	5/16	8.0	NR	F	NR[b]	NR[b]	NR
		1/16 to 1/8 inc.	1.6 to 3.2 inc.	NR	NR[b]	NR	NR[b]	NR
		5/32, 3/16	4.0, 4.8	NR	F[i]	NR	V & OH	NR
		7/32	5.6	NR	NR[b]	NR	NR[b]	NR
		1/4, 5/16	6.4, 8.0	NR	F[i]	NR	H	NR
E6013	ac, dcep, and dcen	1/16 to 1/8 inc.	1.6 to 3.2 inc.	NR	NR[b]	NR	NR[b]	NR
		5/32, 3/16	4.0, 4.8	NR	F[i]	NR	V & OH	NR
		7/32	5.6	NR	NR[b]	NR	NR[b]	NR
		1/4, 5/16	6.4, 8.0	NR	F[i]	NR	H	NR
E6019	ac, dcep, and dcen	5/64 to 1/8 inc.	2.0 to 3.2 inc.	NR	NR[b]	NR[b]	NR[b]	NR
		5/32, 3/16	4.0, 4.8	NR	F[i]	F[i]	V & OH	NR
		7/32	5.6	NR	NR[b]	NR[b]	NR[b]	NR
		1/4, 5/16	6.4, 8.0	NR	F[i]	F[i]	H	NR
E6020	For H-fillets, ac and dcen; For flat position ac, dcep, and dcen	1/8	3.2	NR	NR[b]	NR	NR[b]	NR
		5/32, 3/16	4.0, 4.8	NR	F[i]	NR	H	NR
		7/32	5.6	NR	NR[b]	NR	NR[b]	NR
		1/4	6.4	NR	F[i]	NR	H	NR
		5/16	8.0	NR	F[i]	NR	NR[b]	NR
E6022	ac and dcen	1/8	3.2	NR	NR	NR	NR	NR
		5/32 to 7/32 inc.	4.0 to 5.6 inc.	NR	NR[i,k]	NR	NR	NR
E6027	For H-fillets, ac and dcen; For flat position ac, dcep, and dcen	1/8	3.2	NR	NR[b]	NR[b]	NR[b]	NR
		5/32, 3/16	4.0, 4.8	NR	F[l,m]	F[l]	H	NR
		7/32	5.6	NR	NR[b]	NR[b]	NR[b]	NR
		1/4	6.4	NR	F[l,m]	F[l]	H	NR
		5/16	8.0	NR	F[l,m]	NR[b]	NR[b]	NR

(Continued)

TABLE 4 (CONT'D)
REQUIRED TESTS[a,b]

AWS Classification	Current and Polarity[a]	Electrode Size[c] in.	Electrode Size[c] mm	Chemical[d] Analysis	Radiographic Test[e] All-Weld-Metal Tension Test[f]	Impact Test[g]	Fillet Weld Test[h]	Moisture Test[f]
E7014	ac, dcep, and dcen	3/32, 1/8	2.4, 3.2	NR[b]	NR[b]	NR	NR[b]	NR
		5/32	4.0	F[l]	F[l]	NR	V & OH	NR
		3/16	4.8	NR[b]	F[l]	NR	H	NR
		7/32	5.6	NR[b]	NR[b]	NR	NR[b]	NR
		1/4	6.4	F[l]	F[l]	NR	H	NR
		5/16	8.0	NR[b]	F[l]	NR	H	NR
E7015	dcep	3/32, 1/8	2.4, 3.2	NR[b]	NR[b]	NR[b]	NR[b]	NR[b]
		5/32	4.0	F	F	F	V & OH	Req'd.
		3/16	4.8	NR[b]	F	F	H	NR[b]
		7/32	5.6	NR[b]	NR[b]	NR[b]	NR[b]	NR[b]
		1/4	6.4	F	F	F	H	Req'd.
		5/16	8.0	NR[b]	F	NR[b]	NR[b]	NR[b]
E7016	ac and dcep	3/32, 1/8	2.4, 3.2	NR[b]	NR[b]	NR[b]	NR[b]	NR[b]
		5/32	4.0	F	F	F	V & OH	Req'd.
		3/16	4.8	NR[b]	F	F	H	NR[b]
		7/32	5.6	NR[b]	NR[b]	NR[b]	NR[b]	NR[b]
		1/4	6.4	F	F	F	H	Req'd.
		5/16	8.0	NR[b]	F	NR[b]	NR[b]	NR[b]
E7018	ac and dcep	3/32, 1/8	2.4, 3.2	NR[b]	NR[b]	NR[b]	NR[b]	NR[b]
		5/32	4.0	F	F	F	V & OH	Req'd.
		3/16	4.8	NR[b]	F	F	H	NR[b]
		7/32	5.6	NR[b]	NR[b]	NR[b]	NR[b]	NR[b]
		1/4	6.4	F	F	F	H	Req'd.
		5/16	8.0	NR[b]	F	NR[b]	NR[b]	NR[b]
E7018M[n]	dcep	3/32 to 5/32 inc.	2.4 to 4.0 inc.	F	V	V	NR	Req'd.
		3/16 to 5/16 inc.	4.8 to 8.0 inc.	F	F	F	NR	Req'd.
E7024	ac, dcep, and dcen	3/32, 1/8	2,4, 3.2	NR[b]	NR[b]	NR[b,o]	NR[b]	NR
		5/32	4.0	F[l]	F[l,m]	F[o]	H	NR
		3/16	4.8	NR[b]	F[l,m]	F[o]	H	NR
		7/32	5.6	NR[b]	NR[b]	NR[b,o]	NR[b]	NR
		1/4	6.4	F[l]	F[l,m]	F[o]	H	NR
		5/16	8.0	NR[b]	FC[l,m]	NR[b,o]	NR[b]	NR
E7027	For H-fillets, ac and dcen; For flat position ac, dcep, and dcen	1/8	3.2	NR[b]	NR[b]	NR[b]	NR[b]	NR
		5/32	4.0	F[l]	F[l,m]	F[l]	H	NR
		3/16	4.8	NR[b]	F[l,m]	F[l]	H	NR
		7/32	5.6	NR[b]	NR[b]	NR[b]	NR[b]	NR
		1/4	6.4	F[l]	F[l,m]	F[l]	H	NR
		5/16	8.0	NR[b]	F[l,m]	NR[b]	NR[b]	NR

(Continued)

TABLE 4 (CONT'D)
REQUIRED TESTS[a,b]

AWS Classification	Current and Polarity[a]	Electrode Size[c] in.	Electrode Size[c] mm	Chemical[d] Analysis	Radiographic Test[e] All-Weld-Metal Tension Test[f]	Impact Test[g]	Fillet Weld Test[h]	Moisture Test[f]
E7028	ac and dcep	1/8	3.2	NR[b]	NR[b]	NR[b]	NR[b]	NR[b]
		5/32	4.0	F	F[m]	F		Req'd.
		3/16	4.8	NR[b]	F[m]	F	H	NR[b]
		7/32	5.6	NR[b]	NR[b]	NR[b]	NR[b]	NR[b]
		1/4	6.4	F	F[m]	F	H	Req'd.
		5/16	8.0	NR[b]	F[m]	NR[b]	NR[b]	NR[b]
E7048	ac and dcep	1/8	3.2	NR[b]	NR[b]	NR[b]	NR[b] V-down & OH	NR[b]
		5/32	4.0	F	F	F		Req'd.
		3/16	4.8	NR[b]	F	F	V-down & H	NR[b]

NOTES:
a. NR means "not required". The abbreviations, F, H, H-fillets, V-down, V, and OH, are defined in Note a of Table 1. The terms "dcep" and "dcen", are defined in Note b of Table 1.
b. Standard electrode sizes not requiring this specific test can be classified provided at least two other sizes of that classification have passed the tests required for them, or the size to be classified meets specification requirements by having been tested in accordance with Figures 1, 2, and 3 and Table 6.
c. Electrodes manufactured in sizes not shown shall be tested to the requirements of the nearest standard size. 6.0 mm electrode shall be tested to the requirements of 1/4 in. (6.4 mm) electrode.
d. See Section 9, Chemical Analysis.
e. See Section 10, Radiographic Test.
f. See Section 11, Tension Test.
g. See Section 13, Impact Test.
h. See Section 14, Fillet Weld Test.
i. A radiographic test is not required for this classification.
j. The moisture test given in Sections 15 through 15.9 is the required test for measurement of moisture content of the covering. In Section 16, Absorbed Moisture Test, and Section 17, Diffusible Hydrogen Test, are supplemental tests required only when their corresponding optional supplemental designators are to be used with the classification designators.
k. A transverse tension test (see 11.2 and Figure 9) and a longitudinal guided bend test (see Section 12, Bend Test, and Figure 10) are required for classification of 5/32, 3/16, and 7/32 in. (4.0, 4.8, and 5.6 mm) E6022 electrodes. Welding shall be in the flat position. See Note d of Table 2.
l. When dcep and dcen are shown, only dcen need be tested.
m. Electrodes longer than 18 in. (450 mm) will require a double length test assembly in accordance with Note 2 of Figure 2, to ensure uniformity of the entire electrode.
n. Tests in Section 16 Absorbed Moisture Test, and in Section 17, Diffusible Hydrogen Test, are required tests for all sizes of E7018M.
o. Electrodes identified as E7024-1 shall be impact tested. See Note b of Table 3.

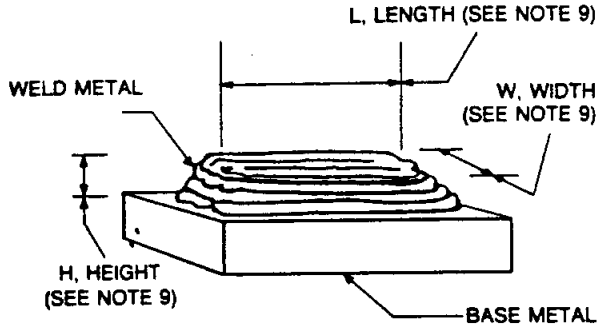

Notes:
1. Base metal of any convenient size, of any type specified in Table 5, shall be used as the base for the weld pad.
2. The surface of the base metal on which the filler metal is to be deposited shall be clean.
3. The pad shall be welded in the flat position with successive layers to obtain undiluted weld metal.
4. One pad shall be welded for each type of current shown in Table 4 except for those classifications identified by note L in Table 4.
5. The number and size of the beads will vary according to the size of the electrode and the width of the weave, as well as the amperage employed.
6. The preheat temperature shall not be less than 60°F (16°C) and the interpass temperature shall not exceed 300°F (150°C).
7. The slag shall be removed after each pass.
8. The test assembly may be quenched in water between passes to control interpass temperature.
9. The minimum completed pad size shall be at least four layers in height (H) with length (L) and width (W) sufficient to perform analysis. The sample for analysis shall be taken at least 1/4 in. (6.4 mm) above the original base metal surface.

FIG. 1 PAD FOR CHEMICAL ANALYSIS OF UNDILUTED WELD METAL

the assemblies shall be as prescribed in Sections 9 through 14.

Electrodes other than low hydrogen electrodes shall be tested without "conditioning." Low hydrogen electrodes, if they have not been adequately protected against moisture pickup in storage, shall be held at a temperature of 500 to 800°F (260 to 427°C) for a minimum of one hour prior to testing.

8.3 Weld Pad. A weld pad, when required, shall be prepared as specified in Fig. 1. Base metal of any convenient size of the type specified in Table 5 shall be used as the base for the weld pad. The surface of the base metal on which the filler metal is deposited shall be clean. The pad shall be welded in the flat position with multiple layers to obtain undiluted weld metal. The preheat temperature shall not be less than 60°F (16°C) and the interpass temperature shall not exceed 300°F (150°C). The slag shall be removed after each pass. The pad may be quenched in water between passes. The dimensions of the completed pad shall be as shown in Fig. 1. Testing of this assembly shall be as specified in Section 9, Chemical Analysis.

8.4 Groove Weld

8.4.1 Mechanical Properties and Soundness. A test assembly shall be prepared and welded as specified in Figs. 2 or 5 using base metal of the appropriate type specified in Table 5. Testing of this assembly shall be as specified in Section 11, Tension Test, and Section 13, Impact Test. The assembly shall be tested in the as-welded or aged condition.

8.4.2 Transverse Tension and Bend Tests. A test assembly shall be prepared and welded as specified in Fig. 4 using base metal of the appropriate type specified in Table 5. Testing of this assembly shall be as specified in 11.2 through 11.4 and Section 12, Bend Test. The assembly shall be tested in the aged condition.

8.5 Fillet Weld. A test assembly shall be prepared and welded as specified in Table 4 and Fig. 3 using base metal of the appropriate type specified in Table 5. The welding positions shall be as specified in Table 6 and Figs. 3 and 6 according to the size and classification of electrode. Testing of the assembly shall be as specified in Section 14, Fillet Weld Test.

9. Chemical Analysis

9.1 The sample for analysis shall be taken from weld metal obtained with the electrode. The sample shall come from a weld pad or from a low dilution area in the fractured all-weld-metal tension specimen or the groove weld in Figs. 2 or 5. Areas where arc starts or craters exist shall be avoided.

The top surface of the pad described in 8.3 and shown in Fig. 1 shall be removed and discarded, and a sample for analysis shall be obtained from the underlying metal by any appropriate mechanical means. The sample shall be free of slag and shall be taken at least $\frac{1}{4}$ in. (6.4 mm) from the nearest surface of the base metal.

The low dilution area in the fractured tension test specimen or in the groove weld in Figs. 2 or 5 shall be prepared for analysis by any suitable mechanical means.

9.2 The sample shall be analyzed by accepted analytical methods. The referee method shall be ASTM Standard Method E350, *Chemical Analysis of Carbon Steel,*

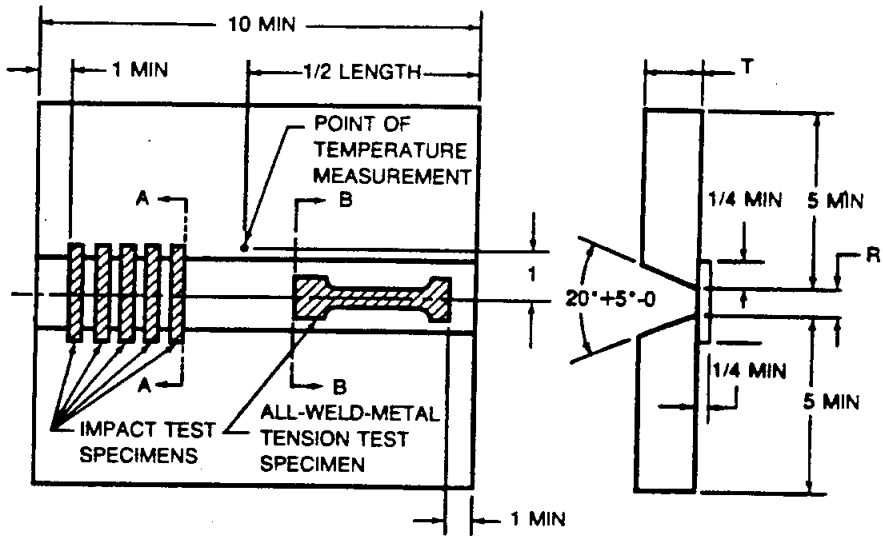

(A) TEST ASSEMBLY SHOWING LOCATION OF TEST SPECIMEN

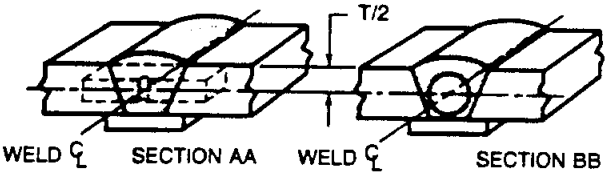

(B) ORIENTATION AND LOCATION OF IMPACT TEST SPECIMEN

(C) LOCATION OF ALL-WELD-METAL TENSION TEST SPECIMEN

SI Equivalents

in.	mm
1/4	6.4
1	25
5	127
10	254

Electrode Size in.	Electrode Size mm	(T) Plate Thickness in.	(T) Plate Thickness mm	(R) Root Opening in.	(R) Root Opening mm	Passes Per Layer	Total Layers
3/32	2.4	1/2	13	3/8	10	2	not specified
1/8	3.2	1/2	13	1/2	13	2	5 to 7
5/32	4.0	3/4	20	5/8	16	2	7 to 9
3/16	4.8	3/4	20	3/4	20	2	6 to 8
7/32	5.6	3/4	20	7/8	23	2	6 to 8
1/4	6.4	1	25	1	25	2	9 to 11
5/16	8.0	1-1/4	32	1-1/8	28	2	10 to 12

Notes:

1. All dimensions except angles are in inches.
2. For electrodes longer than 18 in. (450 mm), a 20 in. (500 mm) minimum length test assembly shall be welded.
3. Base metal shall be as specified in Table 5.
4. The surfaces to be welded shall be clean.
5. Prior to welding, the assembly may be preset to yield a welded joint sufficiently flat to facilitate removal of the test specimens. As an alternative, restraint or a combination of restraint and presetting may be used to keep the welded joint within 5 deg of plane. A welded test assembly that is more than 5 deg out of plane shall be discarded. Straightening of the test assembly is prohibited.
6. Welding shall be in the flat position, using each type of current specified in Table 4 except for classifications identified by Note L in Table 4.
7. The preheat temperature shall be 225°F (105°C) minimum. The interpass temperature shall not be less than 225°F (105°C) nor more than 350°F (175°C).
8. The joint root may be seal welded with 3/32 or 1/8 in. (2.4 or 3.2 mm) electrodes using stringer beads.
9. In addition to the stops and starts at the ends, each pass shall contain a stop and start in between the ends.
10. The completed weld shall be at least flush with the surface of the test plate.

FIG. 2 GROOVE WELD TEST ASSEMBLY FOR MECHANICAL PROPERTIES AND SOUNDNESS EXCEPT FOR E6022 AND E7018M ELECTRODES

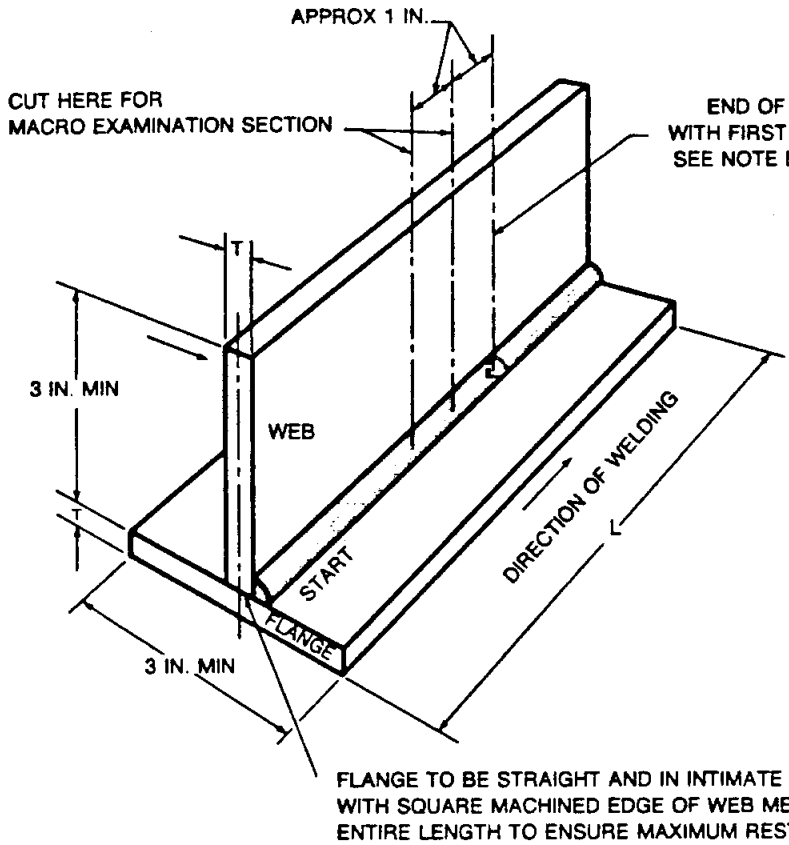

SI Equivalents	
in.	mm
1	25
3	76

Notes:
1. See Table 6 for values of T and L.
2. Base metal shall be as specified in Table 5.
3. The surfaces to be welded shall be clean.
4. An assembly shall be welded in each position specified in Table 6 and shown in Figure 6 using each type of current specified in Table 4.
5. The preheat shall be 60°F (16°C) minimum.
6. A single pass fillet weld shall be made on one side of the joint. The first electrode shall be consumed to a stub length no greater than 2 in. (50 mm).
7. Welding in the vertical position shall be with upward progression, except for the E7048 classification where progression shall be downward.
8. Weld cleaning shall be limited to slag chipping, brushing, and needle scaling. Grinding or filing of the weld face in prohibited.

FIG. 3 FILLET WELD TEST ASSEMBLY

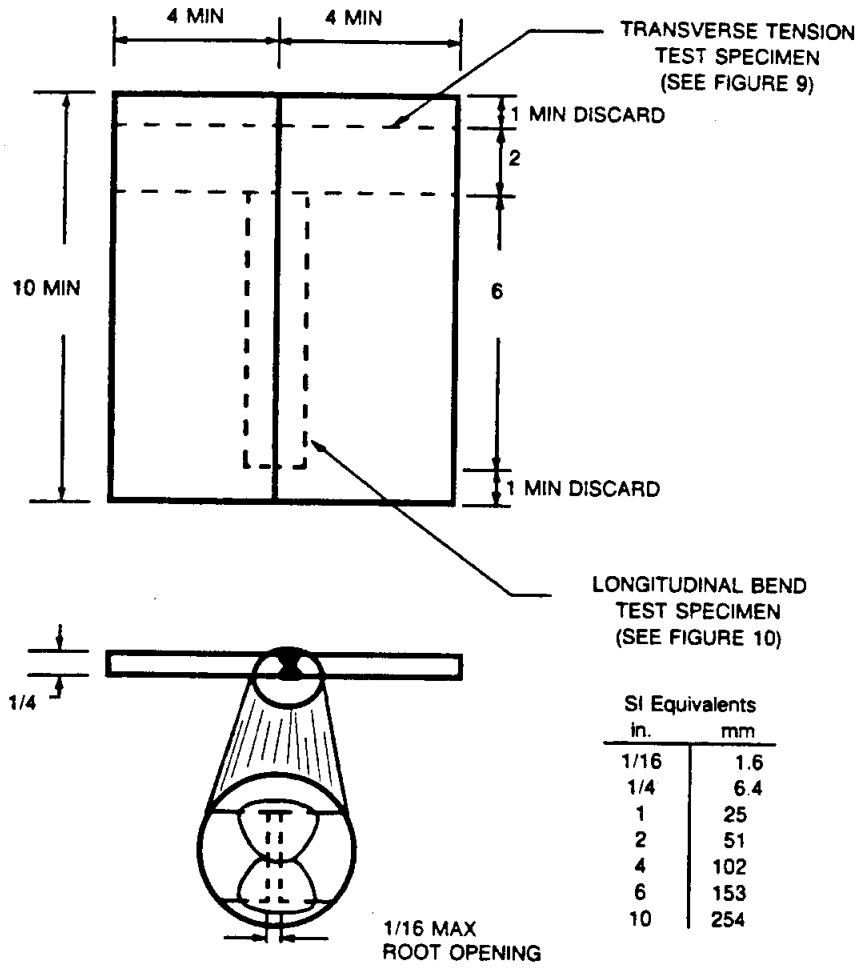

SI Equivalents

in.	mm
1/16	1.6
1/4	6.4
1	25
2	51
4	102
6	153
10	254

Notes:
1. All dimensions are in inches.
2. Base metal shall be as specified in Table 5.
3. The surfaces to be welded shall be clean.
4. Prior to welding, the assembly may be preset to yield a welded joint sufficiently flat to facilitate removal of the test specimens. As an alternative, restraint or a combination of restraint and presetting may be used to keep the welded joint within 5 deg of plane. A welded test assembly that is more than 5 deg out of plane shall be discarded. Straightening of the test assembly is prohibited.
5. The assembly shall be welded in the flat position, using the type of current specified in Table 4.
6. The preheat temperature shall be 60°F (16°C) min. The interpass temperature shall not exceed 350°F (180°C).
7. In addition to the stops and starts at the ends, each pass shall contain a stop and start in between the ends.
8. Back gouging may be done to ensure sound weld metal through the entire thickness of test assembly.
9. The completed weld shall be at least flush with the surface of the test plate.

FIG. 4 TEST ASSEMBLY FOR TRANSVERSE TENSION AND LONGITUDINAL GUIDED BEND TESTS FOR WELDS MADE WITH E6022 ELECTRODES

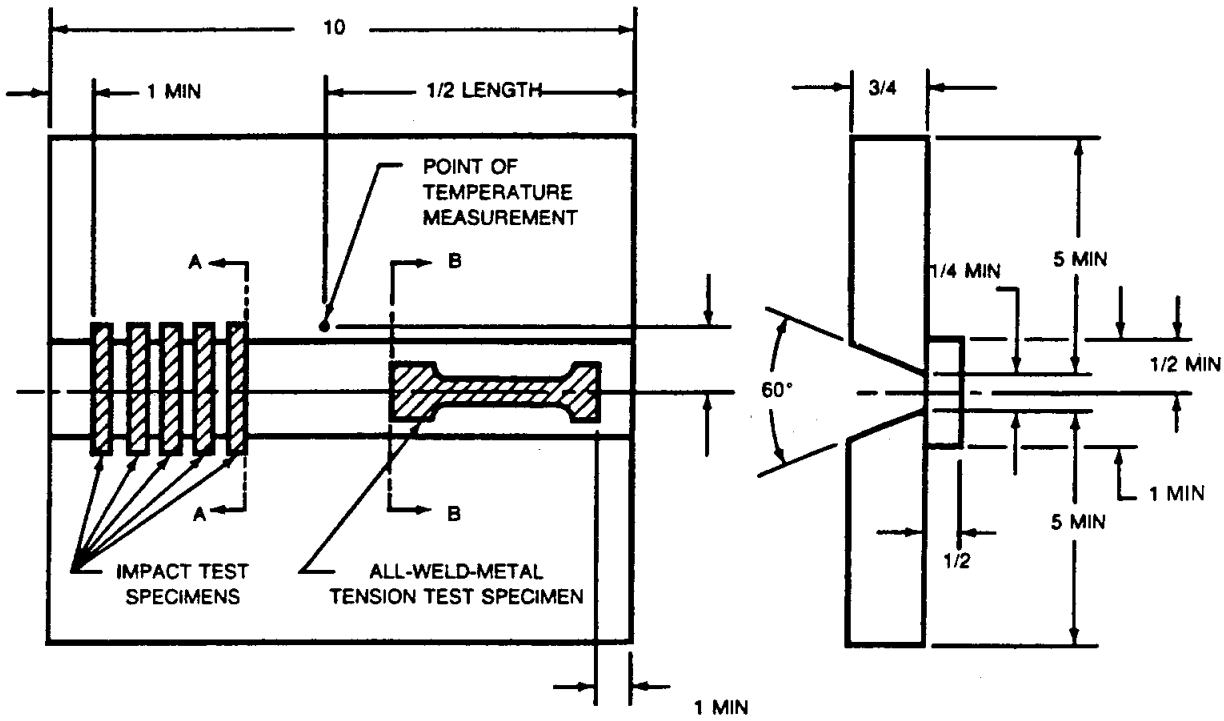

(A) TEST ASSEMBLY LOCATIONS OF TEST SPECIMENS

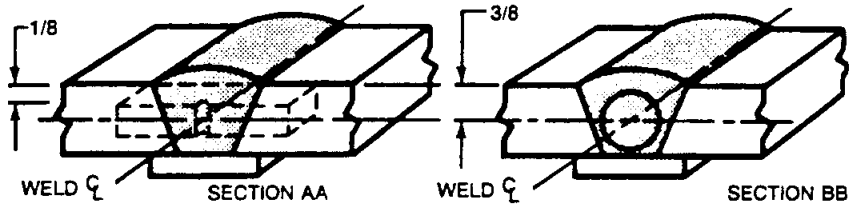

(B) ORIENTATION AND LOCATION OF IMPACT TEST SPECIMEN

(C) LOCATION OF ALL-WELD-METAL TENSION TEST SPECIMEN

SI Equivalents	
in.	mm
1/8	3.2
1/4	6.4
3/8	9.5
1/2	12.7
3/4	19.1
1	25.4
5	127
10	254

Notes:

1. All dimensions except angles are in inches.
2. Base metal shall be as specified in Table 5.
3. The surfaces to be welded shall be clean.
4. Prior to welding, the assembly may be preset to yield a welded joint sufficiently flat to facilitate removal of the test specimens. As an alternative, restraint or a combination of restraint and presetting may be used to keep the welded joint within 5 deg of plane. A welded test assembly that is more than 5 deg out of plane shall be discarded. Straightening of the test assembly is prohibited.
5. The assembly shall be welded in the vertical position with progression upward for electrodes 5/32 in. (4.0 mm) and less in size, and in the flat position for electrodes 3/16 in. (4.8 mm) and greater in size, using the type of current specified in Table 4 for the electrode and welding technique recommended by the electrode manufacturer.
6. The preheat temperature and the interpass temperature shall be 200-250°F (93-121°C).
7. The welding heat input shall be 30 to 40 kJ/in. (12 to 16 kJ/cm) for the 3/32 in. (2.4 mm) size electrodes and 50 to 60 kJ/in. (20 to 24 kJ/cm) for the 1/8 in. (3.2 mm) size and larger electrodes.
8. In addition to the stops and starts at the ends, each pass shall contain a stop and start in between the ends.
9. The completed weld shall be at least flush with the surface of the test plate. Maximum weld reinforcement shall be 3/16 in. (4.8 mm). Peening of weld beads is not permitted.

FIG. 5 GROOVE WELD TEST ASSEMBLY FOR MECHANICAL PROPERTIES AND SOUNDNESS OF WELD METAL MADE WITH E7018M ELECTRODES

TABLE 5
BASE METAL FOR TEST ASSEMBLIES

AWS Classification	Base Metal		UNS Number[b]
	Type	ASTM Specification[a]	
All	Carbon steel	A131 Grade B	K02102
		A285 Grade A	K01700
		A285 Grade B	K02200
All except E7018M	Carbon steel	A285 Grade C	K02801
		A283 Grade D	—
		A36	K02600
		A29 Grade 1015	G10150
		A29 Grade 1020	G10200

NOTES:
a. Equivalent steel may be used.
b. SAE/ASTM Unified Numbering System for Metals and Alloys.

Low Alloy Steel, Silicon Electrical Steel, Ingot Iron and Wrought Iron.

9.3 The results of the analysis shall meet the requirements of Table 7 for the classification of electrode under test.

10. Radiographic Test

10.1 When required in Table 4, the groove weld described in 8.4.1 and shown in Fig. 2 or 5 shall be radiographed to evaluate the soundness of the weld metal. In preparation for radiography, the backing shall be removed, and both surfaces of the weld shall be machined or ground smooth. The finished surface of the weld may be flush with the plate or have a reasonably uniform reinforcement not exceeding $^{3}/_{32}$ in. (2.4 mm). Both surfaces of the test assembly in the area of the weld shall be smooth enough to avoid difficulty in interpreting the radiograph.

10.2 The weld shall be radiographed in accordance with ASTM Method E142, *Controlling Quality of Radiographic Testing*. The quality level of inspection shall be 2-2T.

10.3 The soundness of the weld metal meets the requirements of this specification if the radiograph shows the following:

(*1*) No cracks, no incomplete fusion or incomplete joint penetration

(*2*) No slag inclusions longer than $^{1}/_{4}$ in. (6.4 mm) or $^{1}/_{3}$ of the thickness of the weld, whichever is greater, or no groups of slag inclusions in line that have an aggregate length greater than the thickness of the weld in a length 12 times the thickness of the weld, except when the distance between the successive inclusions exceeds 6 times the length of the longest inclusions in the group.

(*3*) No rounded indications in excess of those permitted by the radiographic standards in Fig. 7 according to the grade specified in Table 8.

One in. (25 mm) of the weld measured from each end of the assembly shall be excluded from radiographic evaluation.

10.4 A rounded indication is an indication (on the radiograph) whose length is no more than three times its width. Rounded indications may be circular, elliptical, conical, or irregular in shape, and they may have "tails." The size of a rounded indication is the largest dimension of the indication, including any tail that may be present.

The indication may be porosity or slag. Indications whose largest dimension does not exceed $^{1}/_{64}$ in. (0.4 mm) shall be disregarded. Test assemblies with porosity indications larger than the largest rounded indications permitted in the radiographic standards do not meet the requirements of this specification.

11. Tension Test

11.1 One all-weld-metal tension test specimen shall be machined from the groove weld described in 8.4.1 as shown in Fig. 2 or 5. The dimensions of the specimen shall be as shown in Fig. 8.

11.2 For E6022 electrodes, one traverse tension test specimen shall be machined from the groove weld

TABLE 6
REQUIREMENTS FOR PREPARATION OF FILLET WELD TEST ASSEMBLIES

AWS Classification	Electrode Size		Assembly Size[a] Thickness (T)		Assembly Size[a] Length[b] (L), Min.		Welding Position	Fillet Weld Size	
	in.	mm	in.	mm	in.	mm		in.	mm
E6010 and E6011	3/32	2.4	1/8	3.2	10	250	V & OH	5/32 max.	4.0
	1/8	3.2	3/16	4.8	12	300	V & OH	3/16 max.	4.8
	5/32	4.0	3/8	9.5	12	300	V & OH	1/4 max.	6.4
	3/16	4.8	3/8	9.5	12	300	V & OH	5/16 max.	8.0
	7/32	5.6	1/2	12.7	12 or 16[c]	300 or 400[c]	H	1/4 min.	6.4
	1/4	6.4	1/2	12.7	16	400	H	1/4 min.	6.4
	5/16	8.0	1/2	12.7	16	400	H	1/4 min.	6.4
E6012, E6013 and E6019	1/16–5/64	1.6–2.0	1/8	3.2	6	150	V & OH	1/8 max.	3.2
	3/32	2.4	1/8	3.2	10	250	V & OH	1/8 max.	3.2
	1/8	3.2	3/16	4.8	12	300	V & OH	3/16 max.	4.8
	5/32	4.0	3/8	9.5	12	300	V & OH	1/4 max.	6.4
	3/16	4.8	1/2	12.7	12	300	V & OH	3/8 max.	9.5
	7/32	5.6	1/2	12.7	12 or 16[c]	300 or 400[c]	H	1/4 min.	6.4
	1/4	6.4	1/2	12.7	16	400	H	5/16 min.	8.0
	5/16	8.0	1/2	12.7	16	400	H	5/16 min.	8.0
E7014	3/32	2.4	1/8	3.2	12	300	V & OH	5/32 max.	4.0
	1/8	3.2	3/16	4.8	12	300	V & OH	3/16 max.	4.8
	5/32	4.0	3/8	9.5	12	300	V & OH	5/16 max.	8.0
	3/16	4.8	3/8	9.5	12	300	H	1/4 min.	6.4
	7/32	5.6	3/8	9.5	12 or 16[c]	300 or 400[c]	H	1/4 min.	6.4
	1/4	6.4	1/2	12.7	16	400	H	5/16 min.	8.0
	5/16	8.0	1/2	12.7	16	400	H	5/16 min.	8.0
E7015 and E7016	3/32	2.4	1/8	3.2	10	250	V & OH	5/32 max.	4.0
	1/8	3.2	1/4	6.4	12	300	V & OH	3/16 max.	4.8
	5/32	4.0	3/8	9.5	12	300	V & OH	5/16 max.	8.0
	3/16	4.8	3/8	9.5	12	300	H	3/16 min.	4.8
	7/32	5.6	1/2	12.7	12 or 16[c]	300 or 400[c]	H	1/4 min.	6.4
	1/4	6.4	1/2	12.7	16	400	H	5/16 min.	8.0
	5/16	8.0	1/2	12.7	16	400	H	5/16 min.	8.0

(Continued)

TABLE 6 (CONT'D)
REQUIREMENTS FOR PREPARATION OF FILLET WELD TEST ASSEMBLIES

AWS Classification	Electrode Size		Assembly Size[a] Thickness (T)		Assembly Size[a] Length[b] (L), Min.		Welding Position	Fillet Weld Size	
	in.	mm	in.	mm	in.	mm		in.	mm
E7018	3/32	2.4	1/8	3.2	10 or 12[d]	250 or 300[d]	V & OH	3/16 max.	4.8
	1/8	3.2	1/4	6.4	12	300	V & OH	1/4 max.	6.4
	5/32	4.0	3/8	9.5	12	300	V & OH	5/16 max.	8.0
	3/16	4.8	3/8	9.5	12	300	H	1/4 min.	6.4
	7/32	5.6	1/2	12.7	12 or 16[c]	300 or 400[c]	H	1/4 min.	6.4
	1/4	6.4	1/2	12.7	16	400	H	5/16 min.	8.0
	5/16	8.0	1/2	12.7	16	400	H	5/16 min.	8.0
E6020	1/8	3.2	1/4	6.4	12	300	H	1/8 min.	3.2
	5/32	4.0	3/8	9.5	12	300	H	5/32 min.	4.0
	3/16	4.8	3/8	9.5	12 or 16[c]	300 or 400[c]	H	3/16 min.	4.8
	7/32	5.6	1/2	12.7	16	400	H	1/4 min.	6.4
	1/4	6.4	1/2	12.7	16	400	H	5/16 min.	8.0
	5/16	8.0	1/2	12.7	16	400	H	5/16 min.	8.0
E6027, E7024, E7027 and E7028	3/32[c]	2.4[e]	1/4	6.4	10	250	H	5/32 min.	4.0
	1/8	3.2	1/4	6.4	12	300	H	5/32 min.	4.0
	5/32	4.0	3/8	9.5	12	300	H	3/16 min.	4.8
	3/16	4.8	3/8	9.5	12 or 16[c]	300 or 400[c]	H	1/4 min.	6.4
	7/32	5.6	1/2	12.7	16 or 26[f]	400 or 650[f]	H	1/4 min.	6.4
	1/4	6.4	1/2	12.7	16 or 26[f]	400 or 650[f]	H	5/16 min.	8.0
	5/16	8.0	1/2	12.7	16 or 26[f]	400 or 650[f]	H	5/16 min.	8.0
E7048	1/8	3.2	1/4	6.4	12	300	V-down & OH	1/4 max.	6.4
	5/32	4.0	3/8	9.5	12	300	V-down & OH	5/16 max.	8.0
	3/16	4.8	3/8	9.5	12 or 16[c]	300 or 400[c]	H & V-down	1/4 min.	6.4

NOTES:
a. See Figure 3.
b. When the end of the bead with the first electrode will be less than 4 in. (100 mm) from the end of the test assembly, a starting tab or a longer test assembly shall be used.
c. For 14 in. (350 mm) electrodes, the minimum length of the test assembly shall be 12 in. (300 mm); for 18 in. (460 mm) electrodes, the minimum length of the test assembly shall be 16 in. (400 mm).
d. For 12 in. (300 mm) electrodes, the minimum length of the test assembly shall be 10 in. (250 mm); for 14 in. (350 mm) electrodes, the minimum length of the test assembly shall be 12 in. (300 mm).
e. E7024 only.
f. For 18 in. (460 mm) electrodes, the minimum length of the test assembly shall be 16 in. (400 mm); for 28 in. (700 mm) electrodes, the minimum length of the test assembly shall be 26 in. (650 mm).

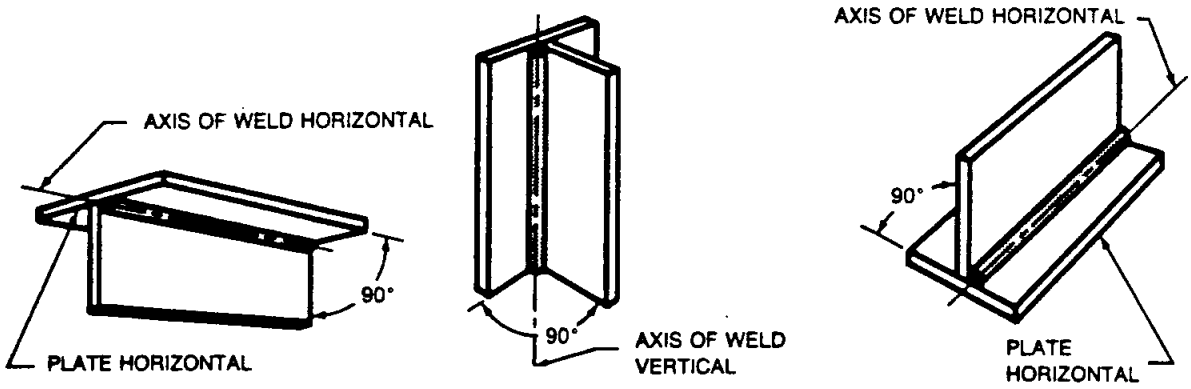

FIG. 6 WELDING POSITIONS FOR FILLET WELD TEST ASSEMBLIES

described in 8.4.2 and Fig. 4. The dimensions of the specimen shall be as shown in Fig. 9.

11.3 The tension specimens for all electrodes except the low hydrogen classifications shall be aged at 200 to 220°F (95 to 105°C) for 48 ±2 hours, and cooled in air to room temperature. All specimens shall be tested in the manner described in the tension testing section of AWS B4.0, *Standard Methods for Mechanical Testing of Welds.*

11.4 The results of the tension test shall meet the requirements specified in Table 2.

12. Bend Test (For E6022 Electrodes Only)

12.1 One longitudinal face bend specimen, as required in Table 4, shall be machined from the groove weld test assembly described in 8.4.2 and shown in Fig. 4. Dimensions of the specimen shall be as shown in Fig. 10.

12.2 The bend specimen shall be aged at 200 to 220°F (95 to 105°C) for 48 ±2 hours then air cooled to room temperature and tested as required in 12.3.

12.3 The specimen shall be tested in the manner described in the bend testing section of AWS B4.0, *Standard Methods for Mechanical Testing of Welds.* The specimen shall be bent uniformly through 180 degrees over a $\frac{3}{4}$ in. (19 mm) radius in any suitable jig. Three standard jigs are shown in Fig. 11. Positioning of the face bend specimen shall be such that the weld face of the last side welded is in tension.

12.4 Each specimen, after bending, shall conform to the $\frac{3}{4}$ in. (19 mm) radius, with an appropriate allowance for springback and the weld metal shall not contain openings in excess of $\frac{1}{8}$ in. (3.2 mm) on the convex surface.

13. Impact Test

13.1 Five Charpy V-notch impact test specimens, Fig. 12, shall be machined from the test assembly shown in Fig. 2 or 5, for those classifications for which impact testing is required in Table 4.

13.2 The five specimens shall be tested in accordance with the fracture toughness testing section of AWS B4.0, *Standard Methods for Mechanical Testing of Welds.* The test temperature shall be that specified in Table 3 for the classification under test.

13.3 In evaluating the test results for all the classifications that require impact testing, except E7018M, the lowest and highest values obtained shall be disregarded. Two of the three remaining values shall equal, or exceed, the specified 20 ft-lb (27J) energy level. One of the three may be lower, but not lower than 15 ft-lb (20J). The average of the three shall not be less than the required 20 ft-lb (27J) energy level.

13.4 In evaluating the results for E7018M, all five values shall be used. Four of the five values shall equal, or exceed, the specified 50 ft-lb (67J) energy level. One of the five may be lower, but not lower than 40 ft-lb (54J). The average of the five shall not be less than the required 50 ft-lb (67J) energy level.

TABLE 7
CHEMICAL COMPOSITION REQUIREMENTS FOR WELD METAL

AWS Classification	UNS[a] Number	Weight, Percent[b]									Combined Limit for
		C	Mn	Si	P	S	Ni	Cr	Mo	V	Mn + Ni + Cr + Mo + V
E6010	W06010	----------Not Specified----------									
E6011	W06011										
E6012	W06012										
E6013	W06013										
E6019	W06019										
E6020	W06020										
E6022	W06022										
E6027	W06027										
E7016	W07016	Not Specified	1.60	0.75	Not Specified		0.30	0.20	0.30	0.08	1.75
E7018	W07018										
E7027	W07027										
E7014	W07014	Not Specified	1.25	0.90	Not Specified		0.30	0.20	0.30	0.08	1.50
E7015	W07015										
E7024	W07024										
E7028	W07028	Not Specified	1.60	0.90	Not Specified		0.30	0.20	0.30	0.08	1.75
E7048	W07048										
E7018M	W07018	0.12	0.40 to 1.60	0.80	0.030	0.020	0.25	0.15	0.35	0.05	Not Specified

NOTES:
a. SAE/ASTM Unified Numbering System for Metals and Alloys.
b. Single values are maximum.

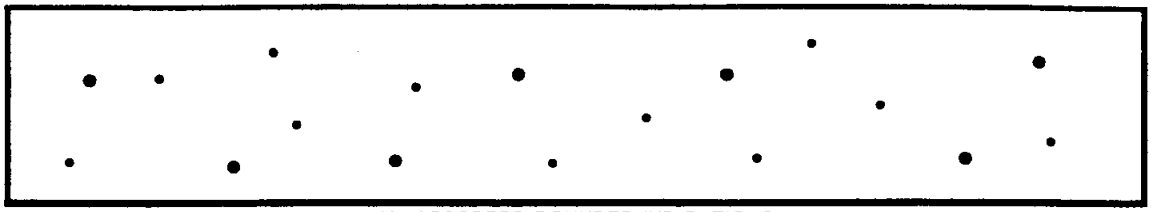

(A) ASSORTED ROUNDED INDICATIONS

SIZE 1/64 in. (0.4 mm) TO 1/16 in. (1.6 mm) IN DIAMETER OR IN LENGTH. MAXIMUM NUMBER OF INDICATIONS IN ANY 6 in (150 mm) OF WELD = 18, WITH THE FOLLOWING RESTRICTIONS:
MAXIMUM NUMBER OF LARGE 3/64 in. (1.2 mm) TO 1/16 in. (1.6 mm) IN DIAMETER OR IN LENGTH INDICATIONS = 3.
MAXIMUM NUMBER OF MEDIUM 1/32 in. (0.8 mm) TO 3/64 in. (1.2 mm) IN DIAMETER OR IN LENGTH INDICATIONS = 5.
MAXIMUM NUMBER OF SMALL 1/64 in. (0.4 mm) TO 1/32 in. (0.8 mm) IN DIAMETER OR IN LENGTH INDICATIONS = 10.

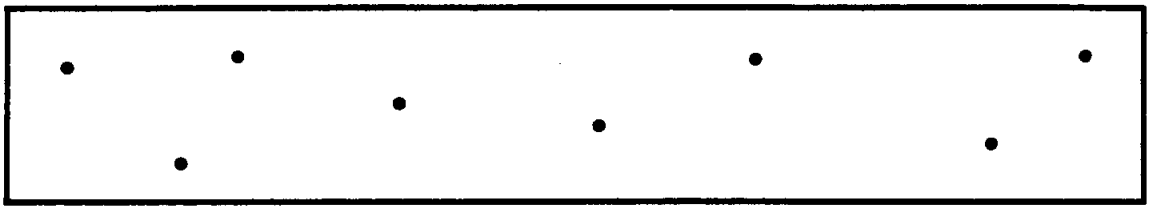

(B) LARGE ROUNDED INDICATIONS

SIZE 3/64 in. (1.2 mm) TO 1/16 in. (1.6 mm) IN DIAMETER OR IN LENGTH.
MAXIMUM NUMBER OF INDICATIONS IN ANY 6 in. (150 mm) OF WELD = 8.

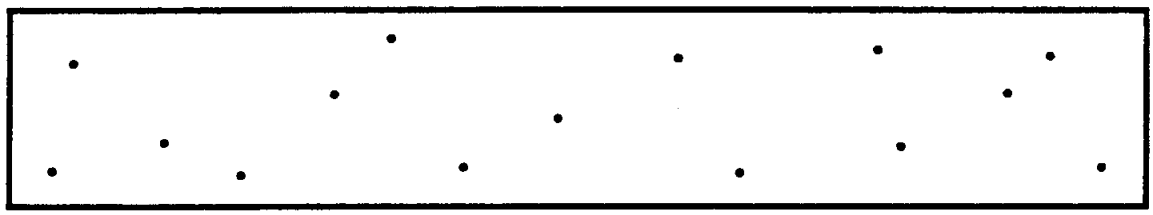

(C) MEDIUM ROUNDED INDICATIONS

SIZE 1/32 in. (0.8 mm) TO 3/64 in. (1.2 mm) IN DIAMETER OR IN LENGTH.
MAXIMUM NUMBER OF INDICATIONS IN ANY 6 in. (150 mm) OF WELD = 15.

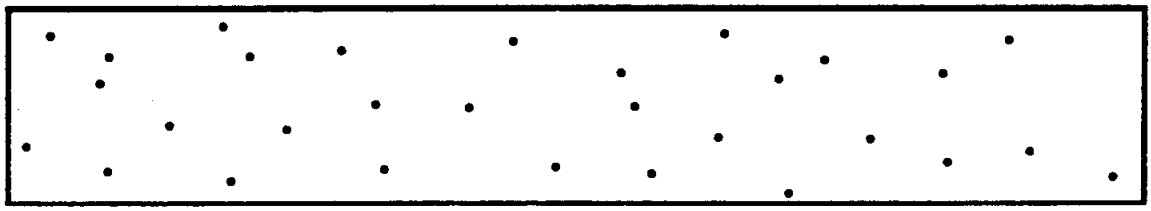

(D) SMALL ROUNDED INDICATIONS

SIZE 1/64 in. (0.4 mm) TO 1/32 in. (0.8 mm) IN DIAMETER OR IN LENGTH.
MAXIMUM NUMBER OF INDICATIONS IN ANY 6 in. (150 mm) OF WELD = 30.

Notes:

1. In using these standards, the chart which is most representative of the size of the rounded indications present in the test specimen radiograph shall be used for determining conformance to these radiographic standards.
2. Since these are test welds specifically made in the laboratory for classification purposes, the radiographic requirements for these test welds are more rigid than those which may be required for general fabrication.
3. Indications whose largest dimension does not exceed 1/64 in. (0.4 mm) shall be disregarded.

FIG. 7 RADIOGRAPHIC ACCEPTANCE STANDARDS FOR ROUNDED INDICATIONS (Grade 1)

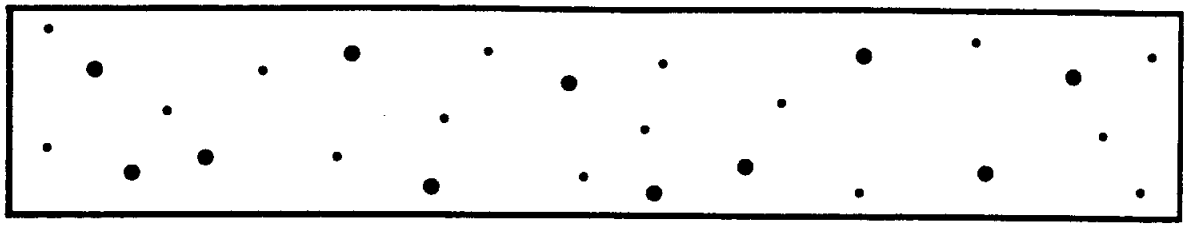

(E) ASSORTED ROUNDED INDICATIONS

SIZE 1/64 In. (0.4 mm) TO 5/64 in. (2.0 mm) IN DIAMETER OR IN LENGTH.
MAXIMUM NUMBER OF INDICATIONS IN ANY 6 in. (150 mm) OF WELD = 27, WITH THE FOLLOWING RESTRICTIONS:
MAXIMUM NUMBER OF LARGE 1/16 in. (1.6 mm) TO 5/64 in. (2.0 mm) IN DIAMETER OR IN LENGTH INDICATIONS = 3.
MAXIMUM NUMBER OF MEDIUM 3/64 in. (1.2 mm) TO 1/16 in. (1.6 mm) IN DIAMETER OR IN LENGTH INDICATIONS = 8.
MAXIMUM NUMBER OF SMALL 1/64 in. (0.4 mm) TO 3/64 in. (1.2 mm) IN DIAMETER OR IN LENGTH INDICATIONS = 16.

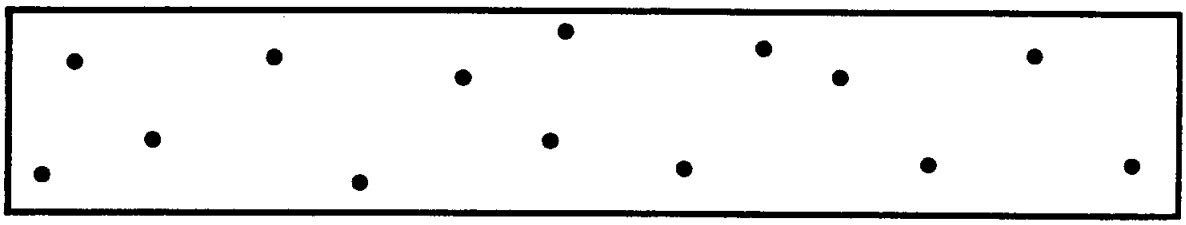

(F) LARGE ROUNDED INDICATIONS

SIZE 1/16 in. (1.6 mm) TO 5/64 in. (2.0 mm) IN DIAMETER OR IN LENGTH.
MAXIMUM NUMBER OF INDICATIONS IN ANY 6 in. (150 mm) OF WELD = 14.

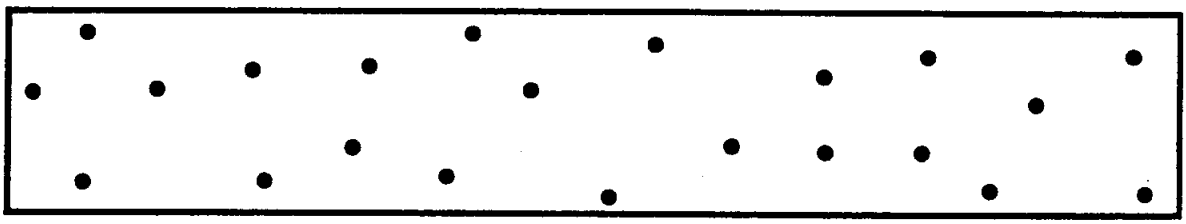

(G) MEDIUM ROUNDED INDICATIONS

SIZE 3/64 in. (1.2 mm) TO 1/16 in. (1.6 mm) IN DIAMETER OR IN LENGTH.
MAXIMUM NUMBER OF INDICATIONS IN ANY 6 in. (150 mm) OF WELD = 22.

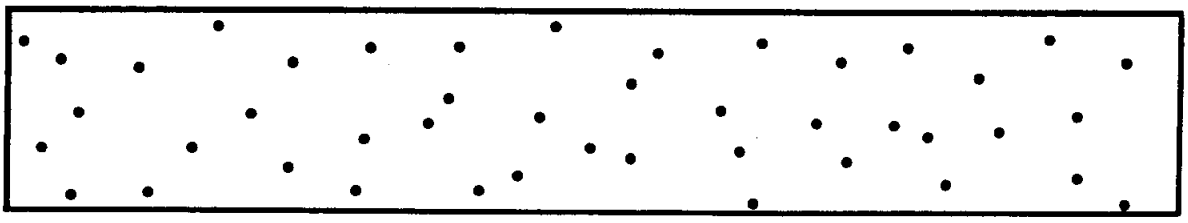

(H) SMALL ROUNDED INDICATIONS

SIZE 1/64 in. (0.4 mm) TO 3/64 in. (1.2 mm) IN DIAMETER OR IN LENGTH.
MAXIMUM NUMBER OF INDICATIONS IN ANY 6 in. (150 mm) OF WELD = 44.

Notes:

1. In using these standards, the chart which is most representative of the size of the rounded indications present in the test specimen radiograph shall be used for determining conformance to these radiographic standards.
2. Since these are test welds specifically made in the laboratory for classification purposes, the radiographic requirements for these test welds are more rigid than those which may be required for general fabrication.
3. Indications whose largest dimension does not exceed 1/64 in. (0.4 mm) shall be disregarded.

FIG. 7 RADIOGRAPHIC ACCEPTANCE STANDARDS FOR ROUNDED INDICATIONS (Grade 2) (CONT'D)

TABLE 8
RADIOGRAPHIC SOUNDNESS REQUIREMENTS

AWS Classification	Radiographic Standard[a,b]
E6019, E6020, E7015, E7016, E7018, E7018M, E7048	Grade 1
E6010, E6011, E6013, E7014, E7024, E6027, E7027, E7028	Grade 2
E6012, E6022	Not specified

NOTES:
a. See Figure 7.
b. The radiographic soundness obtainable under actual industrial conditions employed for the various electrode classifications is discussed in A6.10.1 in the Appendix.

14. Fillet Weld Test

14.1 The fillet weld test, when required in Table 4, shall be made in accordance with 8.5 and Fig. 3. The entire face of the completed fillet weld shall be examined visually. It shall be free of cracks, overlap, slag, and porosity, and shall be substantially free of undercut. An infrequent short undercut up to $\frac{1}{32}$ in. (0.8 mm) depth shall be allowed. After the visual examination, a specimen, approximately 1 in. (25 mm) in length, shall be removed as shown in Fig. 3. One cross-sectional surface of the specimen shall be polished, etched, and then examined as required in 14.2.

14.2 Scribe lines shall be placed on the prepared surface, as shown in Fig. 13, and the fillet weld size, fillet weld leg, and convexity shall be determined to the nearest $\frac{1}{64}$ in. (0.4 mm) by actual measurement (see Fig. 13). These measurements shall meet the requirements of Table 6 with respect to minimum or maximum fillet weld size and the requirements of Table 9 with respect to maximum convexity and maximum difference between fillet weld legs according to the fillet weld size measured.

14.3 The remaining two sections of the test assembly shall be broken through the fillet weld by a force exerted as shown in Fig. 14. When necessary to facilitate fracture through the fillet, one or more of the following procedures may be used:

(*1*) A reinforcing bead, as shown in Fig. 14, may be added to each leg of the weld.

(*2*) The position of the web on the flange may be changed, as shown in Fig. 14.

(*3*) The face of the fillet may be notched, as shown in Fig. 14.

Tests in which the weld metal pulls out of the base metal during bending are invalid tests. Specimens in which this occurs shall be replaced, specimen for specimen, and the test completed. In this case, the doubling of specimens as required for retest in Section 7, Retest, does not apply.

14.4 The fractured surfaces shall be visually examined without magnification. The fracture surface shall be free of cracks. Incomplete fusion at the weld root shall not be greater than 20% of the total length of the weld. There shall be no continuous length of incomplete fusion greater than 1 in. (25 mm) as measured along the weld axis except for electrodes of the E6012, E6013, and E7014 classifications. Fillet welds made with electrodes of these classifications may exhibit incomplete fusion through the entire length of the fillet weld, provided that at no point this incomplete fusion exceeds 25 percent of the smaller leg of the fillet weld.

15. Moisture Test

15.1 The moisture content of the covering on the low hydrogen electrodes, when required in Table 4, shall be determined by any suitable method. In case of dispute, the method described in 15.3 through 15.9 shall be the referee method.

15.2 The electrodes shall be tested without conditioning, unless the manufacturer recommends otherwise. If the electrodes are conditioned, that fact, along with the method used for conditioning, and the time and temperature involved in the conditioning, shall be noted on the test record. The moisture content shall not exceed the limit specified in Table 10.

15.3 This method (the referee method) consists of heating a sample of the covering in a nickel or clay boat placed inside a combustion tube in order to remove the moisture from the covering. A stream of oxygen is used to carry the moisture to an absorption tube where the moisture is collected. The moisture content of the covering is determined by the increase in weight

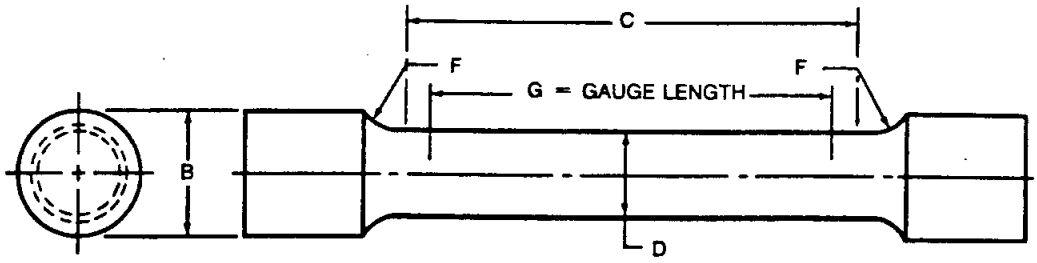

Dimensions of Specimen, in.					
Test Plate Thickness	D	G	C	B	F, Min.
1/2	0.250 ± 0.005	1.000 ± 0.005	1-1/4	3/8	3/16
3/4 and larger	0.500 ± 0.010	2.000 ± 0.005	2-1/4	3/4	3/8
Dimensions of Specimen, mm					
Test Plate Thickness	D	G	C	B	F, Min.
12.7	6.40 ± 0.13	25.40 ± 0.13	32	9.5	4.8
19 and larger	12.70 ± 0.25	50.80 ± 0.13	57	19	9.5

Notes:
1. Dimensions G and C shall be as shown, but ends may be of any shape to fit the testing machine holders as long as the load is axial.
2. The diameter of the specimen within the gauge length shall be slightly smaller at the center than at the ends. The difference shall not exceed one percent of the diameter.
3. When the extensometer is required to determine yield strength, dimension C may be modified. However, the percent of the elongation shall be based on dimension G.
4. The surface finish within the C dimension shall be no rougher than 63 μ in. (1.6 μ m).

FIG. 8 ALL-WELD-METAL TENSION TEST SPECIMEN DIMENSIONS

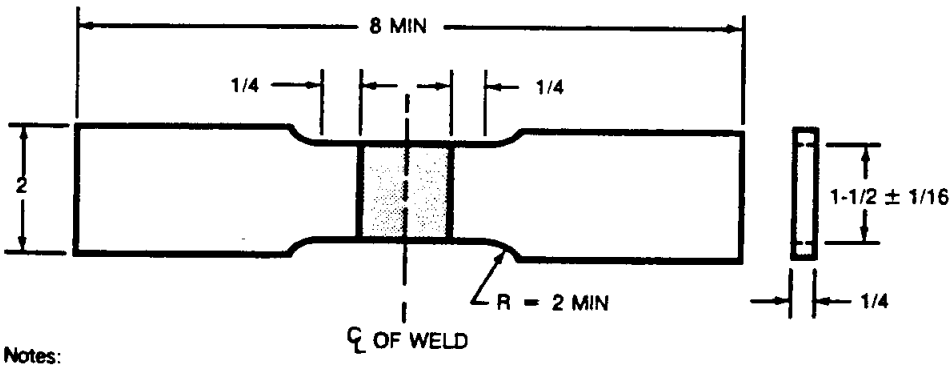

SI Equivalents	
in.	mm
1/4	6.4
1-1/2 ± 1/16	38.1 ± 1.6
2	51
8	203

Notes:
1. All dimensions are in inches.
2. Weld reinforcement shall be ground or machined smooth and flush with the surfaces of the specimen. Grinding or machining marks shall be parallel of the longest dimension of the specimen.

FIG. 9 TRANSVERSE TENSION TEST SPECIMEN (E6022)

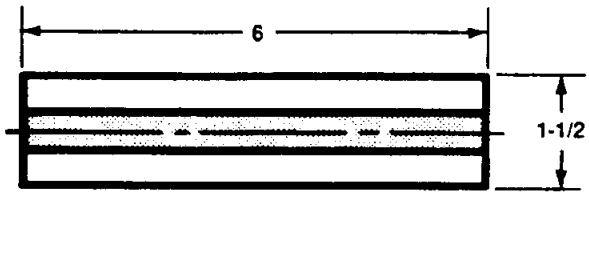

SI Equivalents	
in.	mm
1/16	1.6
1/4	6.4
1-1/2	38
6	152

Notes:
1. All dimensions are in inches.
2. Weld reinforcement shall be ground or machined smooth and flush with the surfaces of the specimen. Grinding or machining marks shall be parallel to the length of the weld.

FIG. 10 LONGITUDINAL GUIDED–BEND TEST SPECIMEN (E6022)

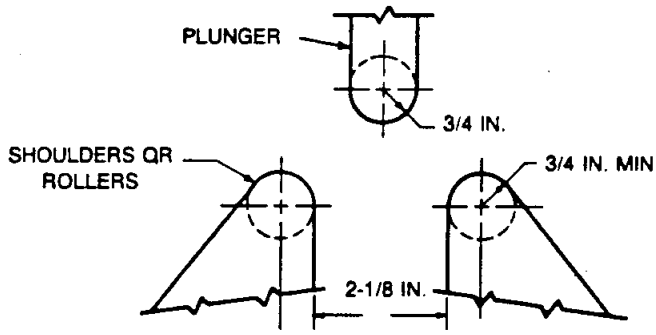

in.	mm
1/16	1.6
3/4	19
2-1/8	54

(A) BOTTOM EJECTING GUIDED-BEND TEST JIG

Notes:
1. Either hardened and greased shoulders or hardened rollers free to rotate shall be used.
2. The shoulders or rollers shall have a minimum bearing length of 2 in. (51 mm) for placement of the specimen.
3. The shoulders or rollers shall be high enough above the bottom of the testing jig so that the specimen will clear the shoulders or rollers when the plunger is in the low position.
4. The plunger shall be fitted with an appropriate base and provision for attachment to the testing machine and shall be designed to minimize deflection or misalignment.
5. The shoulder or roller supports may be made adjustable in the horizontal direction so that specimens of various thickness may be tested in the same jig.
6. The shoulder or roller supports shall be fitted to a base designed to maintain the shoulders or rollers centered and aligned with respect to the plunger, and to minimize deflection or misalignment.

FIG. 11 BEND TEST JIGS

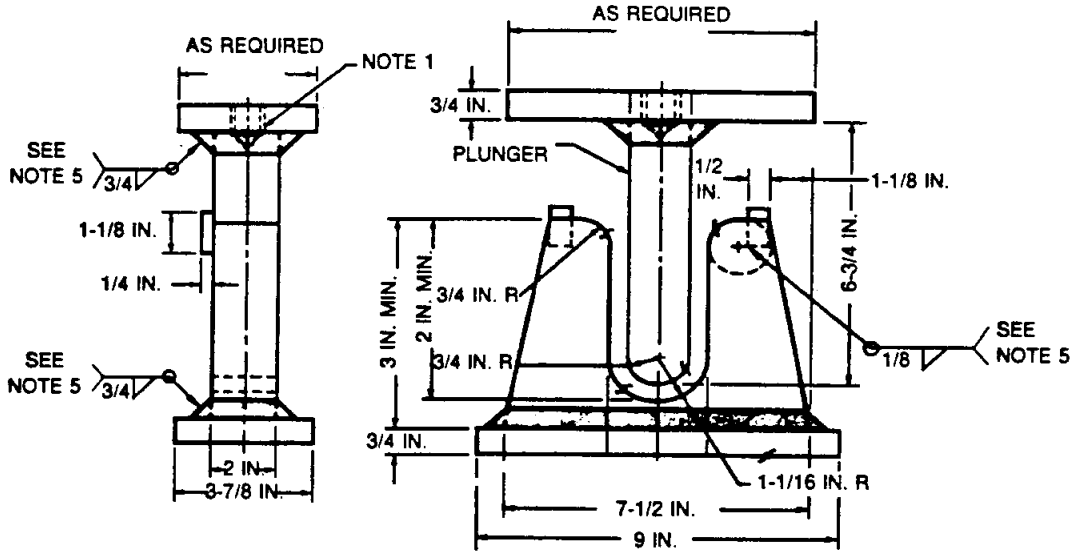

SI Equivalents	
in.	mm
1/16	1.6
1/8	3.2
1/4	6.4
1/2	12.7
3/4	19
1-1/16	27
1-1/8	29
2	51
3	76
3-7/8	98
6-3/4	171
7-1/2	191
9	229

(B) BOTTOM GUIDED-BEND TEST JIG

Notes:

1. A tapped hole of appropriate size, or other suitable means for attaching plunger to testing machine shall be made.
2. Either hardened and greased shoulders or hardened rollers free to rotate shall be used in the die.
3. The plunger and base shall be designed to minimize deflection and misalignment.
4. The specimen shall be forced into the die by applying the load on the plunger until the curvature of the specimen is such that a 1/8 in. (3.0 mm) diameter wire cannot be placed between the specimen and all points in the curvature of the die member of the jig.
5. Weld size indicated is a recommendation. The actual size is the responsibility of the user to ensure rigidity and design adequacy.

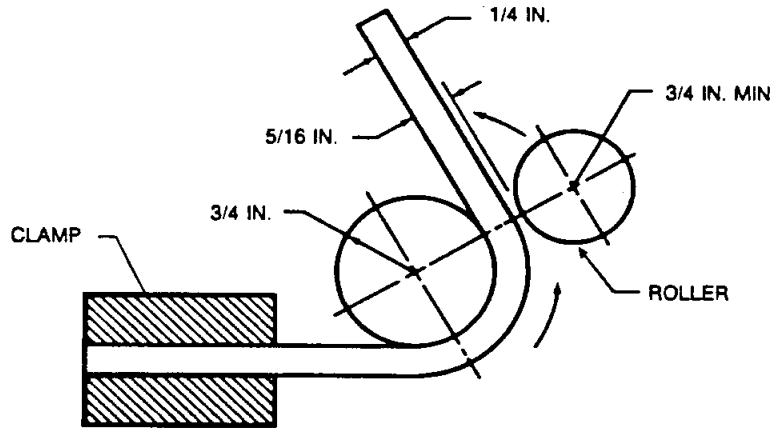

SI Equivalents	
in.	mm
1/4	6.4
5/16	7.9
3/4	19

(C) WRAP-AROUND GUIDED BEND TEST JIG

Notes:

1. Dimensions not shown are the option of the designer, except that the minimum width of the components shall be 2 in. (51 mm).
2. It is essential to have adequate rigidity so that the jig will not deflect during testing. The specimen shall be firmly clamped on one end so that is does not slide during the bending operation.
3. Test specimens shall be removed from the jig when the outer roll has traversed 180° from the starting point.

FIG. 11 BEND TEST JIGS (CONTINUED)

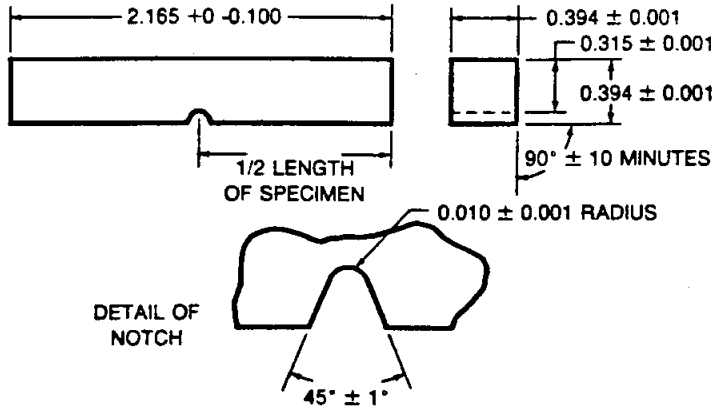

SI Equivalents	
in.	mm
0.001	0.025
0.010	0.255
0.040	1.0
0.10	2.5
0.315	8.0
0.394	10.0
1.082	27.5
2.165	55.0

Notes:
1. All dimensions except angles are in inches.
2. The notched surface and the surface to be struck shall be parallel within 0.002 in. (0.05 mm) and have at least 63 μ in. (1.6 μm) finish. The other two surfaces shall be square with the notched or struck surface within ± 10 minutes of the degree and have at least 125μin. (3.2 μm) finish.
3. The notch shall be smoothly cut by mechanical means and shall be square with the longitudinal edge of the specimen within one degree.
4. The geometry of the notch shall be measured on at least one specimen in a set of five specimens. Measurement shall be done at minimum 50 times magnification on either a shadowgraph or a metallograph.
5. The correct location of the notch shall be verified by etching before or after machining.
6. If a specimen does not break upon being struck, the value for energy absorbed shall be reported as the capacity of the impact testing machine followed by a plus sign (+).

FIG. 12 CHARPY V-NOTCH IMPACT TEST SPECIMEN

of the absorption tube and is expressed as a percentage of the original weight of the sample of the covering.

15.4 The apparatus shall be as shown in Fig. 15[5] and shall consist of the following:

(*1*) A tube furnace with a heating element long enough to heat at least 6 in. (150 mm) of the middle portion of the combustion tube to 2000°F (1093°C).

(*2*) An oxygen purifying train consisting of a needle valve, a flow meter, a 96% sulfuric acid wash bottle, a spray trap, and an anhydrous magnesium perchlorate drying tower.

(*3*) A fused silica combustion tube of at least $^{7}/_{8}$ in. (22 mm) inside diameter with plain ends and a devitrification point above 2000°F (1093°C). (A high-temperature ceramic tube can be used, but a higher value will be obtained for the blanks.) A plug of glass wool fine enough to filter the gases shall be inserted far enough into the exit end of the combustion tube to be heated to a temperature of 400 to 500°F (204 to 260°C).

(*4*) A water absorption train consisting of a U-tube (Schwartz-type) filled with anhydrous magnesium perchlorate and a concentrated sulfuric acid gas-sealing bottle.

15.5 In conducting this test, a sample of approximately 4 grams of covering shall be prepared as a composite of the covering from the middle of three electrodes taken from the same package. The covering shall be removed by bending the electrode or by pinching the covering with clean, dry pliers or forceps. Immediately upon removal, the sample of covering shall be transferred to a dried, stoppered vial or sample bottle.

15.6 The furnace shall be operated at 1800°F ± 25°F (982°C ± 14°C) with an oxygen flow of 200 to 250 ml per minute. The empty boat (see 15.3) shall be placed in the hot zone of the combustion tube, for drying, and the absorption U-tube assembly shall be attached to the system for "conditioning." After 30 minutes, the absorption U-tube shall be removed and placed in the balance case. The boat shall be removed and placed in a desiccator in which anhydrous magne-

[5] Modifications of the type described in Appendix A8, which give equivalent results, also meet the requirements of this specification.

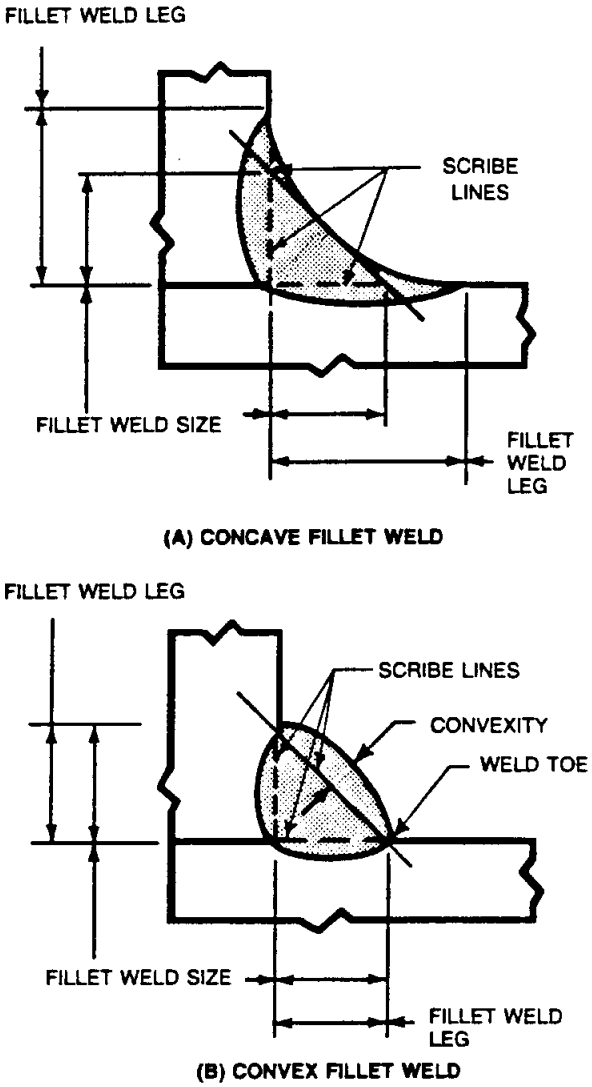

Note:
1. Fillet weld size is the leg lengths of the largest isosceles right triangle which can be inscribed within the fillet weld cross section.
2. Convexity is the maximum distance from the face of a convex fillet weld perpendicular to a line joining the weld toes.
3. Fillet weld leg is the distance from the joint root to the toe of the fillet weld.

FIG. 13 DIMENSIONS OF FILLET WELDS

sium perchlorate is used as a desiccant. After a cooling period of 20 minutes, the absorption U-tube shall be weighed.

15.7 In the blank determination, the procedure for an actual moisture determination shall be followed step-by-step with a single exception of omitting the sample. The boat shall be removed from the desiccator and exposed to the atmosphere for a period approximating the time required to transfer a sample from the balance pan to the boat. The combustion tube shall be opened, the weighed absorption U-tube attached, the boat placed in the hot zone of the combustion tube, and the tube closed. After a heating period of 30 minutes, the absorption U-tube shall be removed and placed in the balance case. The boat shall be transferred to the desiccator. After the 20 minute cooling period, the absorption U-tube shall be weighed and the gain in weight shall be taken as the blank value.

15.8 Immediately after weighing the absorption U-tube above, the sample of the covering shall be weighed and quickly transferred to the boat. The combustion tube shall be opened, the weighed absorption U-tube attached, the boat with sample transferred to the hot zone of the combustion tube, and the tube closed. After heating for 30 minutes, the absorption U-tube shall be removed and placed in the balance case. If another sample is to be run, the boat shall be taken from the combustion tube, the sample removed, and the boat transferred to the desiccator. The absorption U-tube shall be weighed after the 20 minute cooling period. Another determination may be started immediately, since it is not necessary to repeat the blank determination, provided the same combustion boat can be used.

15.9 The calculation shall be made according to the following formula:

$$\text{Percent Moisture} = \frac{A - B}{\text{Weight of Sample}} \times 100$$

where

A = gain in weight of absorption tube in moisture determination

B = gain in weight of absorption tube in blank determination

16. Absorbed Moisture Test

16.1 In order for a low hydrogen electrode to be designated as low-moisture-absorbing with the "R" suffix designator or classified as E7018M, sufficient electrodes shall be exposed to an environment of 80°F (26.7°C)/80% relative humidity for a period of not less than 9 hours by any suitable method. In case of dispute, the exposure method described in 16.2 through 16.6 shall be the referee method. The moisture content of the electrode covering on the low-moisture-absorbing, low hydrogen electrodes (E7015R, E7016R, E7016-1R,

TABLE 9
DIMENSIONAL REQUIREMENTS FOR FILLET WELD USABILITY TEST SPECIMENS

Measured Fillet Weld Size		Maximum Convexity		Maximum Difference Between Fillet Weld Legs	
in.	mm	in.	mm	in.	mm
1/8	3.2	3/64	1.2	1/32	0.8
5/32	4.0	3/64	1.2	3/64	1.2
3/16	4.8	1/16	1.6	1/16	1.6
7/32	5.6	1/16	1.6	5/64	2.0
1/4	6.4	1/16	1.6	3/32	2.4
9/32	7.1	1/16	1.6	7/64	2.8
5/16	8.0	5/64	2.0	1/8	3.2
11/32	8.7	5/64	2.0	9/64	3.6
3/8	9.5	5/64	2.0	5/32	4.0

E7018R, E7018-1R, E7018M, E7028R, E7048R) shall be determined by any suitable method. In case of dispute, the method described in 15.3 through 15.9 shall be the referee method for determination of moisture content. The moisture content of the exposed covering shall not exceed the maximum specified moisture content for the designated electrode and classification in Table 10.

16.2 An electrode sample of each size of E7018M or the smallest and the largest sizes of "R" designated electrode shall be exposed. If the electrodes are conditioned prior to exposure, that fact, along with the method used for conditioning, and the time and temperature involved in conditioning, shall be noted on the test record. Conditioning of electrodes after exposure is not permitted.

16.3 The electrode sample shall be exposed in a suitably calibrated and controlled environmental chamber for nine hours minimum at 80°F, minus 0, plus 5°F (26.7°C, minus 0, plus 2.8°C) and 80% RH, minus 0, plus 5%.

16.4 The environmental chamber shall meet the following design requirements:

(*1*) The apparatus shall be an insulated humidifier which produces the temperature of adiabatic saturation through regenerative evaporation or vaporization of water.

(*2*) The apparatus shall have an average air speed within the envelope of air surrounding the covered electrode of 100 to 325 fpm (0.5 to 1.7 m/sec.).

(*3*) The apparatus shall have a drip-free area where the covered electrode up to 18 in. (450 mm) in length can be positioned with length as perpendicular as practical to the general air flow.

(*4*) The apparatus shall have a calibrated means of continuously measuring and recording the dry bulb temperature and either the wet bulb temperature or the differential between the dry bulb and wet bulb temperature over the period of time required.

(*5*) The apparatus shall have an air speed of at least 900 fpm (4.5 m/s) over the wet bulb sensor unless the wet bulb sensor can be shown to be insensitive to air speed or has a known correction factor that will provide for an adjusted wet bulb reading equal to the temperature of adiabatic saturation.

(*6*) The apparatus shall have the wet bulb sensor located on the suction side of the fan so that there is an absence of heat radiation on the sensor.

16.5 The exposure procedure shall be as follows:

(*1*) The electrode sample in unopened packages, or from reconditioned lots, shall be heated to a temperature, minus 0, plus 10°F (6°C) above the dew point of the chamber at the time of loading.

(*2*) The electrode sample shall be loaded into the chamber without delay after the packages are opened.

(*3*) The electrodes shall be placed in the chamber in a vertical or horizontal position on 1 in. (25 mm) centers, with the length of the electrode perpendicular as practical to the general air flow.

(*4*) Time, temperature, and humidity shall be continuously recorded for the period that the electrodes are in the chamber.

(*5*) Counting of the exposure time shall start when the required temperature and humidity in the chamber are established.

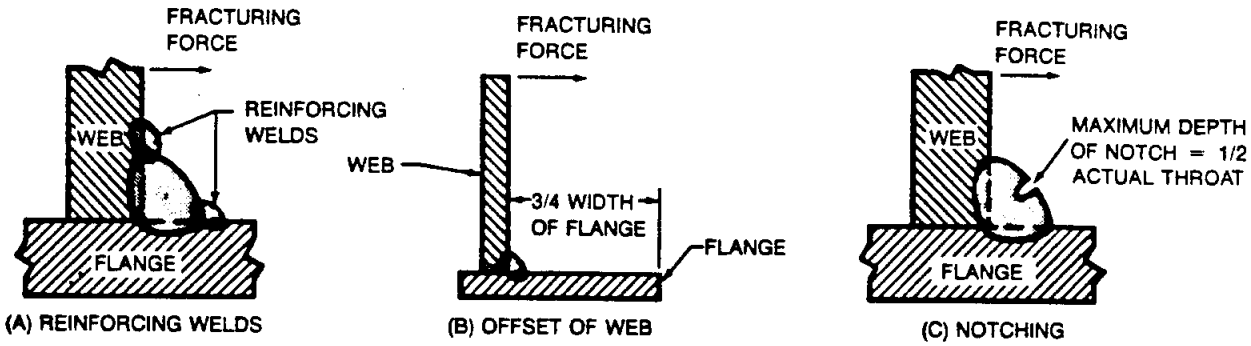

FIG. 14 ALTERNATIVE METHODS FOR FACILITATING FRACTURE OF THE FILLET WELD

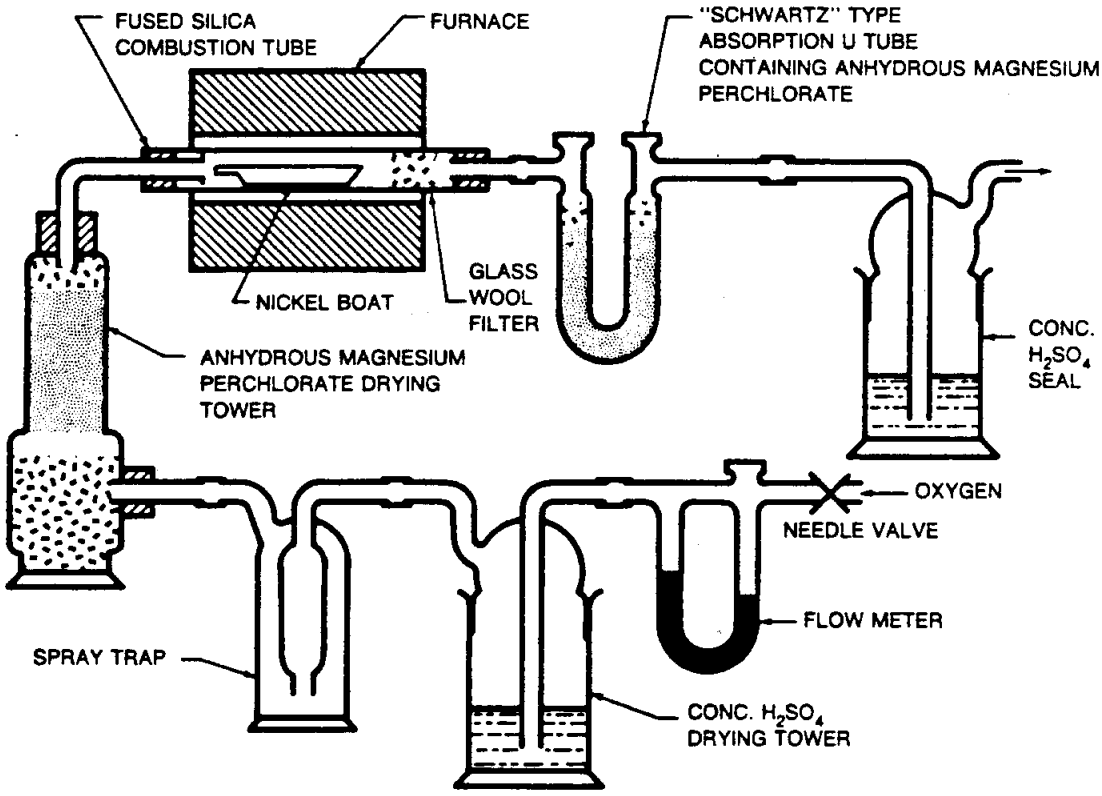

FIG. 15 SCHEMATIC OF TRAIN FOR MOISTURE DETERMINATIONS

TABLE 10
MOISTURE CONTENT LIMITS IN ELECTRODE COVERINGS

AWS Classification	Electrode Designation	Limit of Moisture Content, % by Wt., Max.	
		As-Received or Conditioned[a]	As-Exposed[b]
E7015	E7015	0.6	Not specified
E7016	E7016		
	E7016-1		
E7018	E7018		
	E7018-1		
E7028	E7028		
E7048	E7048		
E7015	E7015R	0.3	0.4
E7016	E7016R		
	E7016-1R		
E7018	E7018R		
	E7018-1R		
E7028	E7028R		
E7048	E7048R		
E7018M	E7018M	0.1	0.4

NOTES:
a. As-received or conditioned electrode coverings shall be tested as specified in Section 15, Moisture Test.
b. As-exposed electrode coverings shall have been exposed to a moist environment as specified in 16.2 through 16.6 before being tested as specified in 16.1.

TABLE 11
DIFFUSIBLE HYDROGEN LIMITS FOR WELD METAL

AWS Classification	Diffusible Hydrogen Designator	Diffusible Hydrogen Content, Average $mL(H_2)/100g$ Deposited Metal, Max.[a,b]
E7018M	None	4.0
E7015	H16	16.0
E7016		
E7018	H8	8.0
E7028		
E7048	H4	4.0

NOTES:
a. Diffusible hydrogen testing in Section 17, Diffusible Hydrogen Test, is required for E7018M. Diffusible hydrogen testing of other low hydrogen electrodes is only required when diffusible hydrogen designator is added as specified in Figure 16.
b. Some low hydrogen classifications may not meet the H4 and H8 requirements.

TABLE 12
STANDARD SIZES AND LENGTHS

Standard Sizes,[a] (Core, Wire Diameter)			Standard Lengths[a,b]					
			E6010, E6011, E6012, E6013, E6022, E7014, E7015, E7016, E7018, E7018M		E6020, E6027, E7024, E7027, E7028, E7048		E6019	
in.		mm	in.	mm	in.	mm	in.	mm
1/16[c]	(0.063)	1.6[c]	9	230	—	—	—	—
5/64[c]	(0.072)	2.0[c]	9 or 12	230 or 300	—	—	9 or 12	230 or 300
3/32[c]	(0.094)	2.4[c]	12 or 14	300 or 350	12 or 14	300 or 350	12 or 14	300 or 350
1/8	(0.125)	3.2	14	350	14	350	14	350
5/32	(0.156)	4.0	14	350	14	350	14 or 18	350 or 450
3/16	(0.188)	4.8	14	350	14 or 18	350 or 460	14 or 18	350 or 450
7/32[c]	(0.219)	5.6[c]	14 or 18	350 or 460	18 or 28	460 or 700	18	450
1/4[c]	(0.250)	6.4[c]	18	450	18 or 28	460 or 700	18	450
5/16[c]	(0.313)	8.0[c]	18	460	18 or 28	460 or 700	18	450

NOTES:
a. Lengths and sizes other than these shall be as agreed to by purchaser and supplier.
b. In all cases, end-gripped electrodes are standard.
c. These diameters are not standard sizes for all classifications (see Table 4).

(6) At the end of the exposure time, the electrodes shall be removed from the chamber and a sample of the electrode covering taken for moisture determination, as specified in Section 15, Moisture Test.

16.6 The manufacturer shall control other test variables which are not defined, but which must be controlled to ensure a greater consistency of results.

17. Diffusible Hydrogen Test

The smallest and largest sizes of the electrode of each classification to be designated by an optional supplemental diffusible hydrogen designator and all sizes of E7018M, shall be tested according to one of the methods given in ANSI/AWS A4.3 *Standard Methods for Determination of the Diffusible Hydrogen Content of Martensitic, Bainitic, and Ferritic Steel Weld Metal Produced by Arc Welding.* Testing shall be done without "conditioning" of the electrode, unless the manufacturer recommends otherwise. If the electrodes are conditioned, that fact, along with the method used for conditioning, and the time and temperature involved in conditioning, shall be noted on the test record. The diffusible hydrogen designator may be added to the classification according to the average test value as compared to the requirements of Table 11.

For purposes of certifying compliance with diffusible hydrogen requirements, the reference atmospheric condition shall be an absolute humidity of 10 grains of water vapor per pound (1.43 g/kg) of dry air at the time of welding. The actual atmospheric conditions shall be reported along with the average value for the test according to ANSI/AWS A4.3 (See Appendix, A9.2).

When the absolute humidity equals or exceeds the reference condition at the time of preparation of the test assembly, the test shall be acceptable as demonstrating compliance with the requirements of this specification, provided the actual test results satisfy the diffusible hydrogen requirements for the applicable designator. Likewise, if the acutal test results for an electrode meet the requirements for the lower or lowest hydrogen designator, as specified in Table 11, the electrode also meets the requirements for all higher hydrogen designators in Table 11 without the need to retest.

PART C — MANUFACTURE, IDENTIFICATION, AND PACKAGING

18. Method of Manufacture

The electrodes classified according to this specification may be manufactured by any method that will produce electrodes that meet the requirements of this specification.

19. Standard Sizes and Lengths

19.1 Standard sizes (diameter of the core wire) and lengths of electrodes are shown in Table 12.

19.2 The diameter of the core wire shall not vary more than ± 0.002 in. (± 0.05 mm) from the diameter specified. The length shall not vary more than ± 1/4 in. (± 10 mm) from that specified.

20. Core Wire and Covering

20.1 The core wire and covering shall be free of defects that would interfere with uniform deposition of the electrode.

20.2 The core wire and the covering shall be concentric to the extent that the maximum core-plus-one-covering dimension shall not exceed the minimum core-plus-one-covering dimension by more than:

(*1*) 7% of the mean dimension in sizes 3/32 in. (2.4 mm) and smaller;

(*2*) 5% of the mean dimension in sizes 1/8 in. (3.2 mm) and 5/32 in. (4.0 mm);

(*3*) 4% of the mean dimension in sizes 3/16 in. (4.8 mm) and larger.

Concentricity may be measured by any suitable means.

21. Exposed Core

21.1 The grip end of each electrode shall be bare (free of covering) for a distance of not less than 1/2 in. (12 mm), nor more than 1 1/4 in. (30 mm) for 5/32 in. (4.0 mm) and smaller sizes, and not less than 3/4 in. (19 mm) nor more than 1 1/2 in. (40 mm) for 3/16 in. (4.8 mm) and larger sizes, to provide for electrical contact with the electrode holder.

21.2 The arc end of each electrode shall be sufficiently bare and the covering sufficiently tapered to permit easy striking of the arc. The length of the bare portion (measured from the end of the core wire to the location where the full cross-section of the covering is obtained) shall not exceed 1/8 in. (3 mm) or the diameter of the core wire, whichever is less. Electrodes with chipped coverings near the arc end, baring the core wire no more than the lesser of 1/4 in. (6 mm) or twice the diameter of the core wire, meet the requirements of this specification, provided no chip uncovers more than 50% of the circumference of the core.

22. Electrode Identification

All electrodes shall be identified as follows:

22.1 At least one imprint of the electrode designation (classification plus any optional designators) shall be applied to the electrode covering in the order specified in Fig. 16 within 2-1/2 in. (65 mm) of the grip end of the electrode.

22.2 The numbers and letters of the imprint shall be of bold block type of a size large enough to be legible.

22.3 The ink used for imprinting shall provide sufficient contrast with the electrode covering so that, in normal use, the numbers and letters are legible both before and after welding.

22.4 The prefix letter "E" in the electrode classification designation may be omitted from the imprint.

23. Packaging

23.1 Electrodes shall be suitably packaged to protect them from damage during shipment and storage under normal conditions. In addition, E7018M electrodes shall be packaged in hermetically sealed containers. Hermetically sealed containers shall be capable of passing the test specified in 23.2.

23.2 For the test, a representative container shall be immersed in water that is at a temperature of at least 50°F (27°C) above that of the packaged material (room temperature). The container shall be immersed so that the surface under observation is approximately 1 in. (25 mm) below the water level and the greatest dimension is parallel to the water surface. A container with a stream of bubbles that lasts for 30 seconds or more does not meet the requirements of this specification.

23.3 Standard package weights shall be as agreed upon between purchaser and supplier.

24. Marking of Packages

24.1 The following product information (as a minimum) shall be legibly marked on the outside of each unit package.

(*1*) AWS specification and classification designations (year of issue may be excluded)

(*2*) Supplier's name and trade designation

(*3*) Size and net weight

(*4*) Lot, control, or heat number

24.2 The following precautionary information (as a minimum) shall be prominently displayed in legible

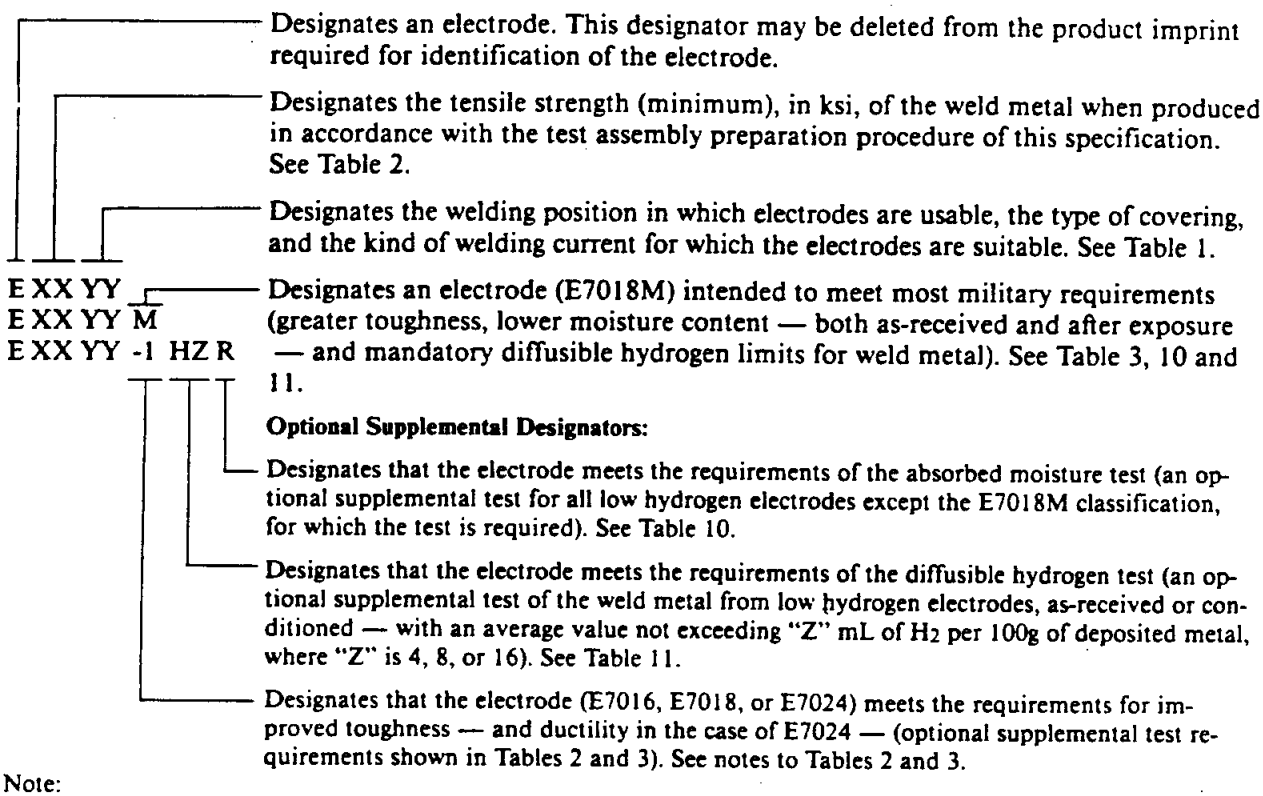

Note:
* The combination of these designators constitutes the electrode classification.

FIG. 16 ORDER OF ELECTRODE MANDATORY AND OPTIONAL SUPPLEMENTAL DESIGNATORS

print on all packages of electrodes, including individual unit packages enclosed within a larger package.

WARNING:

• Protect yourself and others. Read and understand this information. FUMES AND GASES can be dangerous to your health. ARC RAYS can injure eyes and burn skin. ELECTRIC SHOCK can kill.

- Before use, read and understand the manufacturer's instructions, Material Safety Data Sheets (MSDSs), and your employer's safety practices.
- Keep your head out of the fumes.
- Use enough ventilation, exhaust at the arc, or both, to keep fumes and gases away from your breathing zone, and the general area.
- Wear correct eye, ear, and body protection.
- Do not touch electrical parts.
- See American National Standard Z49.1, *Safety in Welding and Cutting,* published by the American Welding Society, 550 North LeJeune Road, P.O. Box 351040, Miami, Florida, 33135; *OSHA Safety and Health Standards,* 29 CFR 1910, available from the U.S. Government Printing Office, Washington, D.C. 20402.

DO NOT REMOVE THIS INFORMATION

Appendix
Guide to AWS Specification for Carbon Steel Electrodes for Shielded Metal Arc Welding

(This Appendix is not a part of ANSI/AWS A5.1-91, *Specification for Carbon Steel Electrodes for Shielded Metal Arc Welding,* but is included for information purpose only.)

A1. Introduction

This guide was designed to correlate the covered electrode classification with the intended applications so the specification can be used effectively. Such correlations are intended as examples rather than complete listings of the base metals for which each filler metal is suitable.

A2. Classification System

A2.1 The system for electrode classification in the specification follows the established pattern used in other AWS filler metal specifications. The letter "E" at the beginning of each classification designation stands for an electrode. The first two digits, 60, for example, designate tensile strength of at least 60 ksi of the weld metal, produced in accordance with the test assembly preparation section of the specification. The third digit designates position usability that will allow satisfactory welds to be produced with the electrode. Thus, the "1," as in E6010, means that the electrode is usable in all positions (flat, horizontal, vertical, and overhead). The "2," as in E6020, designates that the electrode is suitable for use in flat position and for making fillet welds in the horizontal position. The "4," in E7048, designates that the electrode is suitable for use in vertical welding with downward progression and for other positions (see Table 1). The last two digits taken together designate the type of current with which the electrode can be used and the type of covering on the electrode, as listed in Table 1.

A2.2 Optional designators are also used in this specification in order to identify electrodes that have met the mandatory classification requirements and certain supplementary requirements as agreed to between the supplier and the purchaser. A "-1" designator following classification identifies an electrode which meets optional supplemental impact requirements at a lower temperature than required for the classification (see Note b to Table 3). An example of this is the E7024-1 electrode which meets the classification requirements of E7024 and also meets the optional supplemental requirements for fracture toughness and improved elongation of the weld metal (see Note e to Table 2). Certain low hydrogen electrodes also may have optional designators.

A letter "R" is a designator used with the low hydrogen electrode classifications. The letter "R" is used to identify electrodes that have been exposed to a humid environment for a given length of time and tested for moisture absorption in addition to the standard moisture test required for classification of low hydrogen electrodes. See Section 16, Absorbed Moisture Test, and Table 10.

An optional supplemental designator "HZ" following the four digit classification designators or following the "-1" optional supplemental designator, if used, indicates an average diffusible hydrogen content of not more than "Z" ml/100g of deposited metal when tested in the "as-received" or conditioned state in accordance with ANSI/AWS A4.3, *Standard Methods for Determination of Diffusible Hydrogen Content of Martensitic, Bainitic, and Ferritic Steel Weld Metal Produced by Arc Welding.* Electrodes that are designated as meeting the lower or lowest hydrogen limits, as specificed in Table 11, are also understood to be able to meet any higher hydrogen limits even though these are not necessarily designated along with the electrode classification. Therefore, as an example, an electrode

TABLE A1
CANADIAN ELECTRODE CLASSIFICATIONS SIMILAR TO AWS CLASSIFICATIONS (For Information Only)

Canadian Electrode Classification[a]	AWS Classification
E41000	—
E41010	E6010
E41011	E6011
E41012	E6012
E41013	E6013
E41022	E6022
E41027	E6027
E48000	—
E48010	—
E48011	—
E48012	—
E48013	—
E48014	E7014
E48015	E7015
E48016	E7016
E48018[b]	E7018
E48022	—
E48024	E7024
E48027	E7027
E48028	E7028
E48048	E7048

NOTES:
a. From CSA Standard W48.1-M1980, *Mild Steel Covered Arc Welding Electrodes,* published by Canadian Standards Association, 178 Rexdale Boulevard, Rexdale, Ontario, Canada M9W 1R3.
b. Also includes E48018-1 designated electrode.

designated as "H4" also meets "H8" and "H16" requirements without being designated as such. See Section 17, Diffusible Hydrogen Test, and Table 11.

A2.3 Table A1 shows the classification for similar electrodes from Canadian Standards Association Specification W48.1-M1980, *Mild Steel Covered Arc Welding Electrodes.*

A3. Acceptance

Acceptance of all welding materials classified under this specification is in accordance with ANSI/AWS A5.01, *Filler Metal Procurement Guidelines,* as the specification states. Any testing a purchaser requires of the supplier, for material shipped in accordance with this Specification, shall be clearly stated in the purchase order, according to the provisions of ANSI/AWS A5.01. In the absence of any such statement in the purchase order, the supplier may ship the material with whatever testing normally is performed on material of that classification, as specified in Schedule F, Table 1, of ANSI/AWS A5.01. Testing in accordance with any other Schedule in that Table must be specifically required by the purchase order. In such cases, acceptance of the material shipped shall be in accordance with those requirements.

A4. Certification

The act of placing the AWS specification and classification designations on the packaging enclosing the product, or the classification on the product itself, constitutes the supplier's (manufacturer's) certification that the product meets all of the requirements of the specification.

The only testing requirement implicit in this certification is that the manufacturer has actually conducted the tests required by the specification on material that is representative of that being shipped and that material met the requirements of the specification. Representative material, in this case, is any production run of that classification using the same formulation. "Certification" is not to be construed to mean that tests of any kind were necessarily conducted on samples of the specific material shipped. Tests on such material may or may not have been conducted. The basis for the certification required by the specification is the classification test of "representative material" cited above, and the "Manufacturer's Quality Assurance Program" in ANSI/AWS A5.01.

A5. Ventilation During Welding

A5.1 The following five major factors govern the quantity of fumes in the atmosphere to which welders and welding operators are exposed during welding:

(*1*) Dimensions of the space in which welding is done (with special regard to the height of the ceiling)

(*2*) Number of welders and welding operators working in that space

(*3*) Rate of evolution of fumes, gases, or dust, according to the materials and processes used

(*4*) The proximity of the welders or welding operators to the fumes as they issue from the welding zone, and to the gases and dusts in the space in which they are working

(*5*) The ventilation provided to the space in which the welding is done

A5.2 American National Standard Z49.1, *Safety in Welding and Cutting* (published by the American Welding Society), discusses the ventilation that is required during welding and should be referred to for details.

Attention is drawn particularly to the Section of that document entitled "Health Protection and Ventilation."

A6. Welding Consideration

A6.1 Weld metal properties may vary widely, according to the size of the electrode and amperage used, size of the weld beads, base metal thickness, joint geometry, preheat and interpass temperatures, surface condition, base metal composition, dilution, etc. Because of the profound effect of these variables, a test procedure was chosen for this specification which would represent good welding practice and minimize variation of the most potent of these variables.

A6.2 It should be recognized, however that production practices may be different. The differences encountered may alter the properties of the weld metal. For instance, interpass temperatures may range from subfreezing to several hundred degrees. No single temperature or reasonable range of temperatures can be chosen for classification tests which will be representative of all of the conditions encountered in production work.

Properties of production welds may vary accordingly, depending on the particular welding conditions. Weld metal properties may not duplicate, or even closely approach, the values listed and prescribed for test welds. For example, ductility in single pass welds in thick base metal made outdoors in cold weather without adequate preheating may drop to little more than half that required herein and normally obtained. This does not indicate that either the electrodes or the welds are below standard. It indicates only that the particular production conditions are more severe than the test conditions prescribed by this specification.

A6.3 Hydrogen is another factor to be considered. Weld metals, other than those from low hydrogen electrodes (E7015, E7016, E7018, E7018M, E7028, and E7048), contain significant quantities of hydrogen for some period of time after they have been made. This hydrogen gradually escapes. After two to four weeks at room temperature or in 24 to 48 hours at 200 to 220°F (95 to 105°C), most of it has escaped. As a result of this change in hydrogen content, the ductility of the weld metal increases towards its inherent value, while the yield, tensile, and impact strengths remain relatively unchanged. This specification requires aging of the test specimens at 200 to 220°F (95 to 105°C) for 48 hours before subjecting them to the tension or bend test. This is done to minimize discrepancies in testing.

A6.4 When weldments are given a postweld heat treatment, the temperature and time at temperature are very important. The tensile and yield strengths generally are decreased as postweld heat treatment temperature and time at temperature are increased.

A6.5 Welds made with electrodes of the same classification and the same welding procedure will have significantly different tensile and yield strengths in the as-welded and postweld heat-treated conditions. Comparison of the values for as-welded and postweld heat-treated [1150°F (620°C) for one hour] weld metal will show the following:

A6.5.1 The tensile strength of the postweld heat-treated weld metal will be approximately 5 ksi (34.5 MPa) lower than that of the weld metal in the as-welded condition.

A6.5.2 The yield strength of the postweld heat-treated weld metal will be approximately 10 ksi (69 MPa) lower than that of the weld metal in the as-welded condition.

A6.6 Conversely, postweld heat-treated welds made with the same electrodes and using the same welding procedure except for variation in interpass temperature and postweld heat treatment time can have almost identical tensile and yield strengths. As an example, almost identical tensile and yield strengths may be obtained in two welds, one using an interpass temperature of 300°F (150°C) and postweld heat-treated for 1 hour at 1150°F (620°C), and the other using an interpass temperature of 200°F (93°C) and postweld heat-treated for 10 hours at 1150°F (620°C).

A6.7 Electrodes which meet all the requirements of any given classification may be expected to have similar characteristics. Certain minor differences continue to exist from one brand to another due to differences in preferences that exist regarding specific operating characteristics. Furthermore, the only differences between the present E60XX and E70XX classifications are the differences in chemical composition and mechanical properties of the weld metal, as shown in Tables 2, 3, and 7. In many applications, electrodes of either E60XX or E70XX classifications may be used.

A6.8 Since the electrodes within a given classification have similar operating characteristics and mechanical properties, the user can limit the study of available electrodes to those within a single classification after determining which classification best suits the particular requirements.

A6.9 This specification does not establish values for all characteristics of the electrodes falling within a given classification, but it does establish values to measure those of major importance. In some instances, a particular characteristic is common to a number of classifications and testing for it is not necessary. In other instances, the characteristics are so intangible that no adequate tests are available. This specification does not necessarily provide all the information needed to determine which classification will best fulfill a particular need. Therefore, a discussion of each classification is included in Appendix A7 to supplement information given elsewhere in the specification.

A6.10 Some important tests for measuring major electrode characteristics are as follows:

A6.10.1 Radiographic Test. Nearly all of the carbon steel electrodes covered by this specification are capable of producing welds that meet most radiographic soundness requirements. However, if incorrectly applied, unsound welds may be produced by any of the electrodes. For electrodes of some classifications, the radiographic requirements in Table 8 are not necessarily indicative of the average radiographic soundness to be expected in production use. Electrodes of the E6010, E6011, E6019, and E6020 classifications can be expected to produce acceptable radiographic results.

Under certain conditions, notably in welding long, continuous joints in relatively thick base metal, low hydrogen electrodes of the E7015, E7016, E7018, and E7018M classifications will often produce even better results. On the other hand, in joints open to the atmosphere on the root side, at the ends of joints, in joints with many stops and starts, and in welds on small diameter pipe or in small, thin, irregularly shaped joints, the low hydrogen electrodes tend to produce welds of poor radiographic soundness. E6013 electrodes usually produce the best radiographic soundness in welding small, thin parts.

E6027, E7024 and E7028 electrodes produce welds which may be either quite good or rather inferior in radiographic soundness. The tendency seems to be in the latter direction. Of all types, the E6022 and E6012 electrodes generally produce welds with the least favorable radiographic soundness.

A6.10.2 Fillet Weld Test. This test is included as a means of demonstrating the usability of an electrode. This test is concerned with the appearance of the weld (i.e., weld face contour and smoothness, undercut, overlap, size, and resistance to cracking). It also provides an excellent and inexpensive method of determining the adequacy of fusion at the weld root (one of the important considerations for an electrode).

A6.10.3 Toughness. Charpy V-notch impact requirements are included in the specification. All classes or electrodes in this specification can produce weld metal of sufficient toughness for many applications. The inclusion of impact requirements for certain electrode classifications allows the specification to be used as a guide in selecting electrodes where low-temperature toughness is required. There can be considerable variation in the weld metal toughness unless particular attention is given to the welding procedure and the preparation and testing of the specimens. The impact energy values are for Charpy V-notch specimens and should not be confused with values obtained with other toughness tests.

A6.11 Electrode Covering Moisture Content and Conditioning

A6.11.1 Hydrogen can have adverse effects on welds in some steels under certain conditions. One source of this hydrogen is moisture in the electrode coverings. For this reason, the proper storage, treatment, and handling of electrodes are necessary.

A6.11.2 Electrodes are manufactured to be within acceptable moisture limits, consistent with the type of covering and strength of the weld metal. They are then normally packaged in a container which has been designed to provide the degree of moisture protection considered necessary for the type of covering involved.

A6.11.3 If there is a possibility that the noncellulosic electrodes may have absorbed excessive moisture, they may be restored by rebaking. Some electrodes require rebaking at a temperature as high as 800°F (425°C) for approximately 1 to 2 hours. The manner in which the electrodes have been produced and the relative humidity and temperature conditions under which the electrodes are stored determine the proper length of time and temperature used for conditioning. Some typical storage and drying conditions are included in Table A2.

A6.11.4 Cellulose coverings for E6010 and E6011 electrodes need moisture levels of 3% to 7% for proper operation; therefore, storage or conditioning above ambient temperature may dry them too much and adversely affect their operation (see Table A2).

A6.12 Core Wire. The core wire for all the electrodes classified in this specification is usually a mild steel having a typical composition which may differ signifi-

TABLE A2
TYPICAL STORAGE AND DRYING CONDITIONS FOR COVERED ARC WELDING ELECTRODES

AWS Classifications	Storage Conditions[a]		Drying Conditions[b]
	Ambient Air	Holding Ovens	
E6010, E6011	Ambient temperature	Not recommended	Not recommended
E6012, E6013, E6019, E6020, E6022, E6027, E7014, E7024, E7027	80 ± 20°F (30 ± 10°C) 50 percent max relative humidity	20°F (12°C) to 40°F (24°C) above ambient temperature	1 hour at temperature 275 ± 25°F (135 ± 15°C)
E7015, E7016, E7018, E7028, E7018M, E7048	Not Recommended[c]	50°F (30°C) to 250°F (140°C) above ambient temperature	500 to 800°F (260 to 427°C) 1 to 2 hours at temperature

NOTES:
a. After removal from manufacturer's packaging.
b. Because of inherent differences in covering composition, the manufacturers should be consulted for the exact drying conditions.
c. Some of these electrode classifications may be designated as meeting low moisture absorbing requirements. This designation does not imply that storage in ambient air is recommended.

cantly from that of the weld metal produced by the covered electrodes.

A6.13 Coverings

A6.13.1 Electrodes of some classifications have substantial quantities of iron powder added to their coverings. The iron powder fuses with the core wire and the other metal in the covering, as the electrode melts, and is deposited as part of the weld metal, just as is the core wire. Relatively high currents can be used since a considerable portion of the electrical energy passing through the electrode is used to melt the thicker covering containing iron powder. The result is that more weld metal may be obtained from a single electrode with iron powder in its covering than from a single electrode of the same diameter without iron powder.

A6.13.2 Due to the thick covering and deep cup produced at the arcing end of the electrode, iron powder electrodes can be used very effectively with a "drag" technique. This technique consists of keeping the electrode covering in contact with the workpiece at all times, which makes for easy handling. However, a technique using a short arc length is preferable if the $^3/_{32}$ in. (2.4 mm) or $^1/_8$ in. (3.2 mm) electrodes are to be used in other than flat or horizontal fillet welding positions or for making groove welds.

A6.13.3 The E70XX electrodes were included in this specification to acknowledge the higher strength levels obtained with many of the iron powder and low hydrogen electrodes, as well as to recognize the industry demand for electrodes with 70 ksi (482 MPa) minimum tensile strength. Unlike the E70XX-X classification in AWS A5.5, *Specification for Low Alloy Steel Covered Arc Welding Electrodes,* these electrodes do not contain deliberate alloy additions, nor are they required to meet minimum tensile properties after postweld heat treatment.

A6.13.4 E70XX low hydrogen electrodes have mineral coverings which are high in limestone and other ingredients that are low in moisture and hence "low in hydrogen content." Low hydrogen electrodes were developed for welding low alloy high-strength steels, some of which were high in carbon content. Electrodes with other than low hydrogen coverings produce "hydrogen-induced cracking" in those steels. These underbead cracks occur in the base metal, usually just below the weld bead.

Weld metal cracks also may occur. These usually are caused by the hydrogen absorbed from the arc atmosphere. Although these cracks do not generally occur in carbon steels which have a low carbon content, they may occur whenever other electrodes are used on higher carbon or alloy steels. Low hydrogen electrodes are also used to weld high-sulphur and enameling steels. Electrodes with other than low hydrogen coverings give porous welds on high-sulphur steels. With enameling steels, the hydrogen that escapes after welding with other than low hydrogen electrodes produces holes in the enamel.

A6.14 Amperage Ranges. Table A3 gives amperage ranges which are satisfactory for most classifications. When welding vertically upward, currents near the lower limit of the range are generally used.

A7. Description and Intended Use of Electrodes

A7.1 E6010 Classification

A7.1.1 E6010 electrodes are characterized by a deeply penetrating, forceful, spray type arc and readily removable, thin, friable slag which may not seem to completely cover the weld bead. Fillet welds usually have a relatively flat weld face and have a rather coarse, unevenly spaced ripple. The coverings are high in cellulose, usually exceeding 30% by weight. The other materials generally used in the covering include titanium dioxide, metallic deoxidizers such as ferromanganese, various types of magnesium or aluminum silicates, and liquid sodium silicate as a binder. Because of their covering composition, these electrodes are generally described as the high-cellulose sodium type.

A7.1.2 These electrodes are recommended for all welding positions, particularly on multiple pass applications in the vertical and overhead welding positions and where welds of good soundness are required. They frequently are selected for joining pipe and generally are capable of welding in the vertical position with either uphill or downhill progression.

A7.1.3 The majority of applications for these electrodes is in joining carbon steel. However, they have been used to advantage on galvanized steel and on some low alloy steels. Typical applications include shipbuilding, buildings, bridges, storage tanks, piping, and pressure vessel fittings. Since the applications are so widespread, a discussion of each is impractical. Sizes larger than $^{3}/_{16}$ in. (4.8 mm) generally have limited use in other than flat or horizontal-fillet welding positions.

A7.1.4 These electrodes have been designed for use with dcep (electrode positive). The maximum amperage that can generally be used with the larger sizes of these electrodes is limited in comparison to that for other classifications due to the high spatter loss that occurs with high amperage.

A7.2 E6011 Classification

A7.2.1 E6011 electrodes are designed to be used with ac current and to duplicate the usability characteristics and mechanical properties of the E6010 classification. Although also usable with dcep (electrode positive), a decrease in joint penetration will be noted when compared to the E6010 electrodes. Arc action, slag, and fillet weld appearance are similar to those of the E6010 electrodes.

A7.2.2 The coverings are also high in cellulose and are described as the high-cellulose potassium type. In addition to the other ingredients normally found in E6010 coverings, small quantities of calcium and potassium compounds usually are present.

A7.2.3 Sizes larger than $^{3}/_{16}$ in. (4.8 mm) generally have limited use in other than flat or horizontal-fillet welding positions.

A7.3 E6012 Classification

A7.3.1 E6012 electrodes are characterized by low penetrating arc and dense slag, which completely covers the bead. This may result in incomplete root penetration in fillet welded joints. The coverings are high in titania, usually exceeding 35% by weight, and usually are referred to as the "titania" or "rutile" type. The coverings generally also contain small amounts of cellulose and ferromanganese, and various siliceous materials such as feldspar and clay with sodium silicate as a binder. Also, small amounts of certain calcium compounds may be used to produce satisfactory arc characteristics on dcen (electrode negative).

A7.3.2 Fillet welds tend to have a convex weld face with smooth even ripples in the horizontal welding position, and widely spaced rougher ripples in the vertical welding position which become smoother and more uniform as the size of the weld is increased. Ordinarily, a larger size fillet must be made in the vertical and overhead positions using E6012 electrodes compared to welds with E6010 and E6011 electrodes of the same diameter.

A7.3.3 The E6012 electrodes are all-position electrodes and usually are suitable for welding in the vertical position with either the upward or downward progression. However, more often the larger sizes are used in the flat and horizontal positions than in the vertical and overhead positions. The larger sizes are often used for single pass, high-speed, high current fillet welds in the horizontal welding position. Their ease of handling, good fillet weld face, and ability to bridge wide root openings under conditions of poor fit, and to withstand high amperages make them very well suited to this type of work. The electrode size used for vertical and overhead position welding is frequently one size smaller than would be used with an E6010 or E6011 electrode.

TABLE A3
TYPICAL AMPERAGE RANGES

Electrode Diameter		E6010 and E6011	E6012	E6013	E6019	E6020	E6022	E6027 and E7027	E7014	E7015 and E7016	E7018M and E7018	E7024 and E7028	E7048
in.	mm												
1/16	1.6	—	20 to 40	20 to 40	—	—	—	—	—	—	—	—	—
5/64	2.0	—	25 to 60	25 to 60	35 to 55	—	—	—	—	—	—	—	—
3/32*	2.4*	40 to 80	35 to 85	45 to 90	50 to 90	—	—	—	80 to 125	65 to 110	70 to 100	100 to 145	— —
1/8	3.2	75 to 125	80 to 140	80 to 130	80 to 140	100 to 150	110 to 160	125 to 185	110 to 160	100 to 150	115 to 165	140 to 190	80 to 140
5/32	4.0	110 to 170	110 to 190	105 to 180	130 to 190	130 to 190	140 to 190	160 to 240	150 to 210	140 to 220	150 to 220	180 to 250	150 to 220
3/16	4.8	140 to 215	140 to 240	150 to 230	190 to 250	175 to 250	170 to 400	210 to 300	200 to 275	180 to 255	200 to 275	230 to 305	210 to 270
7/32	5.6	170 to 250	200 to 320	210 to 300	240 to 310	225 to 310	370 to 520	250 to 350	260 to 340	240 to 320	260 to 340	275 to 365	—
1/4	6.4	210 to 320	250 to 400	250 to 350	310 to 360	275 to 375	— —	300 to 420	330 to 415	300 to 390	315 to 400	335 to 430	— —
5/16	8.0	275 to 425	300 to 500	320 to 430	350 to 410	340 to 450	— —	375 to 475	390 to 500	375 to 475	375 to 470	400 to 525	— —

* This diameter is not manufactured in the E7028 classification.

A7.3.4 Weld metal from these electrodes is generally lower in ductility and may be higher in yield strength [1 to 2 ksi (690 to 1380 kPa)] than weld metal from the same size of either the E6010 or E6011 electrodes.

A7.4 E6013 Classification

A7.4.1 E6013 electrodes, although very similar to the E6012 electrodes, have distinct differences. Their flux covering makes slag removal easier and gives a smoother arc transfer than E6012 electrodes. This is particularly the case for the small diameters [$^1/_{16}$, $^5/_{64}$, and $^3/_{32}$ in. (1.6, 2.0, and 2.4 mm)]. This permits satisfactory operation with lower open-circuit ac voltage. E6013 electrodes were designed specifically for light sheet metal work. However, the larger diameters are used on many of the same applications as E6012 electrodes and provide low penetrating arc. The smaller diameters provide a less penetrating arc than is obtained with E6012 electrodes. This may result in incomplete penetration in fillet welded joints.

A7.4.2 Coverings of E6013 electrodes contain rutile, cellulose, ferromanganese, potassium silicate as a binder, and other siliceous materials. The potassium compounds permit the electrodes to operate with ac at low amperages and low open-circuit voltages.

A7.4.3 E6013 electrodes are similar to the E6012 electrodes in usability characteristics and bead appearance. The arc action tends to be quieter and the bead surface smoother with a finer ripple. The characteristics of E6013 electrodes vary slightly from brand to brand. Some are recommended for sheet metal applications where their ability to weld satisfactorily in the vertical welding position with downward progression is an advantage.

Others, with a more fluid slag, are used for horizontal fillet welds and other general purpose welding. These electrodes produce a flat fillet weld face rather than the convex weld face characteristic of E6012 electrodes. They are also suitable for making groove welds because of their concave weld face and easily removed slag. In addition, the weld metal is definitely freer of slag and oxide inclusions than E6012 weld metal and exhibits better soundness. Welds with the smaller diameter E6013 electrodes often meet the Grade 1 radiographic requirements of this specification.

A7.4.4 E6013 electrodes usually cannot withstand the high amperages that can be used with E6012 electrodes in the flat and horizontal welding positions. Amperages in the vertical and overhead positions, however, are similar to those used with E6012 electrodes.

A7.5 E7014 Classification

A7.5.1 E7014 electrode coverings are similar to those of E6012 and E6013 electrodes, but with the addition of iron powder for obtaining higher deposition efficiency. The covering thickness and the amount of iron powder in E7014 are less than in E7024 electrodes (see A7.10).

A7.5.2 The iron powder also permits the use of higher amperages than are used for E6012 and E6013 electrodes. The amount and character of the slag permit E7014 electrodes to be used in all positions.

A7.5.3 The E7014 electrodes are suitable for welding carbon and low alloy steels. Typical weld beads are smooth with fine ripples. Joint penetration is approximately the same as that obtained with E6012 electrodes (see 7.3.1), which is advantageous when welding over a wide root opening due to poor fit. The face of fillet welds tends to be flat to slightly convex. The slag is easy to remove. In many cases, it removes itself.

A7.6 Low Hydrogen Electrodes

A7.6.1 Electrodes of the low hydrogen classifications (E7015, E7016, E7018, E7018M, E7028, and E7048) are made with inorganic coverings that contain minimal moisture. The covering moisture test, as specified in Section 15, Moisture Test, converts hydrogen-bearing compounds in any form in the covering into water vapor that is collected and weighed. The test thus assesses the potential hydrogen available from an electrode covering. All low hydrogen electrodes, in the as-manufactured condition or after conditioning, are expected to meet a maximum covering moisture limit of 0.6% or less, as required in Table 10.

A7.6.2 The potential for diffusible hydrogen in the weld metal can be assessed more directly, but less conveniently, by the diffusible hydrogen test, as specified in Section 17, Diffusible Hydrogen Test. The results of this test, using electrodes in the as-manufactured condition or after conditioning, permit the addition of an optional supplemental diffusible hydrogen designator to the classification designation according to Table 11. See also A9.2 in this Appendix.

A7.6.3 In order to maintain low hydrogen electrodes with minimal moisture in their coverings, these electrodes should be stored and handled with considerable care. Electrodes which have been exposed to humidity may absorb considerable moisture and their low hydrogen character may be lost. Then conditioning can restore their low hydrogen character. See Table A2.

A7.6.4 Low hydrogen electrode coverings can be designed to resist moisture absorption for a considerable time in a humid environment. The absorbed moisture test (see Section 16, Absorbed Moisture Test), assesses this characteristic by determining the covering moisture after nine hours exposure to 80°F (27°C), 80% relative humidity air. If, after this exposure, the covering moisture does not exceed 0.4%, then the optional supplemental designator, "R", may be added to the electrode classification designation, as specified in Table 10. See also A9.3 in this Appendix.

A7.6.5 E7015 Classification

A7.6.5.1 E7015 electrodes are low hydrogen electrodes to be used with dcep (electrode positive). The slag is chemically basic.

A7.6.5.2 E7015 electrodes are commonly used for making small welds on thick base metal, since they are less susceptible to cracking (see A6.13.4). They are also used for welding high sulphur and enameling steels. Welds made with E7015 electrodes on high sulphur steels may produce a very tight slag and a very rough or irregular bead appearance in comparison to welds with the same electrodes in steels of normal sulphur content.

A7.6.5.3 The arc of E7015 electrodes is moderately penetrating. The slag is heavy, friable, and easy to remove. The weld face is convex, although a fillet weld face may be flat.

A7.6.5.4 E7015 electrodes up to and including the $^{5}/_{32}$ in. (4.0 mm) size are used in all welding positions. Larger electrodes are used for groove welds in the flat welding position and fillet welds in the horizontal and flat welding positions.

A7.6.5.5 Amperages for E7015 electrodes are higher than those used with E6010 electrodes of the same diameter. The shortest possible arc length should be maintained for best results with E7015 electrodes. This reduces the risk of porosity. The necessity for preheat is reduced; therefore, better welding conditions are provided.

A.7.6.6 E7016 Classification

A7.6.6.1 E7016 electrodes have all the characteristics of E7015 electrodes, plus the ability to operate on ac. The core wire and coverings are very similar to those of E7015, except for the use of a potassium silicate binder or other potassium salts in the coverings to facilitate their use with ac. Most of the preceding discussion on E7015 electrodes applies equally well to the E7016 electrodes. The discussion in A6.13.4 also applies.

A7.6.6.2 Electrodes designated as E7016-1 have the same usability and weld metal composition as E7016 electrodes except that the manganese content is set at the high end of the range. They are intended for welds requiring a lower transition temperature than is normally available from E7016 electrodes.

A7.6.7 E7018 Classification

A7.6.7.1 E7018 electrode coverings are similar to E7015 coverings, except for the addition of a relatively high percentage of iron powder. The coverings on these electrodes are slightly thicker than those of the E7016 electrodes.

A7.6.7.2 E7018 low hydrogen electrodes can be used with either ac or dcep. They are designed for the same applications as the E7016 electrodes. As is common with all low hydrogen electrodes, a short arc length should be maintained at all times.

A7.6.7.3 In addition to their use on carbon steel, the E7018 electrodes are also used for joints involving high-strength, high carbon, or low alloy steels (see also A6.13). The fillet welds made in the horizontal and flat welding positions have a slightly convex weld face, with a smooth and finely rippled surface. The electrodes are characterized by a smooth, quiet arc, very low spatter, and medium arc penetration. E7018 electrodes can be used at high travel speeds.

A7.6.7.4 Electrodes designated as E7018-1 have the same usability and weld metal composition as E7018 electrodes, except that the manganese content is set at the high end of the range. They are intended for welds requiring a lower transition temperature than is normally available from E7018 electrodes.

A7.6.8 E7018M Electrodes

A7.6.8.1 E7018M electrodes are similar to E7018-1H4R electrodes, except that the testing for mechanical properties and for classification is done on a groove weld that has a 60 degree included angle and, for electrodes up to $^{5}/_{32}$ in. (4.0 mm), welded in the vertical position with upward progression. The impact test results are evaluated using all five test values and higher values are required at −20°F (−29°C). The maximum allowable moisture-in-coating values in the "as-received" or reconditioned state are more restrictive than that required for E7018R. This classification closely corresponds to MIL-7018-M in MIL-E-22200/10 specification, with the exception that the absorbed

moisture limits on the electrode covering and the diffusible hydrogen limits on the weld metal are not as restrictive as those in MIL-E-22200/10.

A7.6.8.2 E7018M is intended to be used with dcep type current in order to produce the optimum mechanical properties. However, if the manufacturer desires, the electrode may also be classified as E7018 provided all the requirements of E7018 are met.

A7.6.8.3 In addition to their use on carbon steel, the E7018M electrodes are used for joining carbon steels to high strength low alloy steels and higher carbon steels. Fillet welds made in the horizontal and flat welding positions have a slightly convex weld face, with a smooth and finely rippled surface. The electrodes are characterized by a smooth, quiet arc, very low spatter, and medium arc penetration.

A7.6.9 E7028 Classification

A7.6.9.1 E7028 electrodes are very much like E7018 electrodes. However, E7028 electrodes are suitable for fillet welds in the horizontal welding position and groove welds in the flat welding position only, whereas E7018 electrodes are suitable for all positions.

A7.6.9.2 The E7028 electrode coverings are much thicker. They make up approximately 50% of the weight of the electrodes. The iron content of E7028 electrodes is higher (approximately 50% of the weight of the coverings). Consequently, on fillet welds in the horizontal position and groove welds in the flat welding position, E7028 electrodes give a higher deposition rate than the E7018 electrodes for a given size of electrode.

A7.6.10 E7048 Classification. Electrodes of the E7048 classification have the same usability, composition, and design characteristics as E7018 electrodes, except that E7048 electrodes are specifically designed for exceptionally good vertical welding with downward progression (see Table 1).

A7.7 E6019 Classification

A7.7.1 E6019 electrodes, although very similar to E6013 and E6020 electrodes in their coverings, have distinct differences. E6019 electrodes, with a rather fluid slag system, provide deeper arc penetration and produce weld metal that meets a 22% minimum elongation requirement, meets the Grade 1 radiographic standards, and has an average impact strength of 20 ft-lb (27J) when tested at 0°F (−18°C).

A7.7.2 E6019 electrodes are suitable for multipass of up to 1 in. (25 mm) thick steel. They are designed for use with ac, dcen, or dcep. While $^{3}/_{16}$ in. (4.8 mm) and smaller diameter electrodes can be used for all welding positions (except vertical welding position with downward progression), the use of larger diameter electrodes should be limited to the flat or horizontal fillet welding position. When welding in the vertical welding position with upward progression, weaving should be limited to minimize undercut.

A7.8 E6020 Classification

A7.8.1 E6020 electrodes have a high iron oxide covering. They are characterized by a spray type arc, produce a smooth and flat, or slightly concave weld face and have an easily removable slag.

A7.8.2 A low viscosity slag limits their usability to horizontal fillets and flat welding positions. With arc penetration ranging from medium to deep (depending upon welding current), E6020 electrodes are best suited for thicker base metal.

A7.9 E6022 Classification. Electrodes of the E6022 classification are recommended for single pass, high-speed, high current welding of groove welds in the flat welding position, lap joints in the horizontal welding position, and fillet welds on sheet metal. The weld face tends to be more convex and less uniform, especially since the welding speeds are higher.

A7.10 E7024 Classification

A7.10.1 E7024 electrode coverings contain large amounts of iron powder in combination with ingredients similar to those used in E6012 and E6013 electrodes. The coverings on E7024 electrodes are very thick and usually amount to about 50% of the weight of the electrode, resulting in higher deposition efficiency.

A7.10.2 The E7024 electrodes are well suited for making fillet welds in the flat or horizontal position. The weld face is slightly convex to flat, with a very smooth surface and an extremely fine ripple. These electrodes are characterized by a smooth, quiet arc, very low spatter, and low arc penetration. They can be used with high travel speeds. Electrodes of these classifications can be operated on ac, dcep, or dcen.

A7.10.3 Electrodes designated as E7024-1 have the same general usability characteristics as E7024 electrodes. They are intended for use in situations requiring greater ductility and a lower transition temperature than normally is available from E7024 electrodes.

A7.11 E6027 Classification

A7.11.1 E6027 electrode coverings contain large amounts of iron powder in combination with ingredients

similar to those found in E6020 electrodes. The coverings on E6027 electrodes are also very thick and usually amount to about 50% of the weight of the electrode.

A7.11.2 The E6027 electrodes are designed for fillet or groove welds in the flat position with ac, dcep, or dcen, and will produce flat or slightly concave weld face on fillet welds in the horizontal position with either ac or dcen.

A7.11.3 E6027 electrodes have a spray-type arc. They will operate at high travel speeds. Arc penetration is medium. Spatter loss is very low. E6027 electrodes produce a heavy slag which is honeycombed on the underside. The slag is friable and easily removed.

A7.11.4 Welds produced with E6027 electrodes have a flat to slightly concave weld face with a smooth, fine, even ripple, and good wetting along the sides of the joint. The weld metal may be slightly inferior in radiographic soundness to that from E6020 electrodes. High amperages can be used, since a considerable portion of the electrical energy passing through the electrode is used to melt the covering and the iron powder it contains. These electrodes are well suited for thicker base metal.

A7.12 E7027 Classification. E7027 electrodes have the same usability and design characteristics as E6027 electrodes, except they are intended for use in situations requiring slightly higher tensile and yield strengths than are obtained with E6027 electrodes. They must also meet chemical composition requirements (see Table 7). In other respects, all previous discussions for E6027 electrodes also apply to E7027 electrodes.

A8. Modification of Moisture Test Apparatus

A8.1 Some laboratories have modified test apparatus for determining the moisture content of electrode coverings. The following are some of the modifications which have been successfully used:

A8.1.1 This specification recommends that only nickel boats be used rather than clay boats because lower blank values can be obtained. Some laboratories use zirconium silicate combustion tubes in preference to fused silica or mullite because zirconium silicate will not devitrify or allow the escape of combustible gases at temperatures up to 2500°F (1370°C). Some combustion tubes are reduced at the exit end and a separate dust trap is used. This dust trap consists of a 200 mm drying tube filled with glass wool which is inserted between the Schwartz absorption U-tube and the combustion tube. A suitable 300°F (149°C) heater is mounted around the dust trap to keep the evolved water from condensing in the trap. The dust trap is filled with glass wool which can be easily inspected to determine when the glass wool should be replaced. An extra spray trap may be installed downstream of the absorption U-tube to ensure that the concentrated sulfuric acid in the gas sealing bottle is not accidently drawn into the absorption U-tube.

A8.1.2 On the entrance end of the combustion tube, a pusher rod can be used consisting of a $\frac{1}{8}$ in. (3.2 mm) stainless steel rod mounted in a $\frac{1}{4}$ in. (6.4 mm) copper tee fitting. This is used at the entrance of the combustion tube and permits gradual introduction of the sample into the tube while oxygen is passing over the sample. In this way, any free moisture will not be lost, which can happen if the sample is introduced directly into the hot zone before closing the end of the tube.

A9. Special Tests

A9.1 It is recognized that supplementary tests may be necessary to determine the suitability of these welding electrodes for applications involving properties not considered in this specification. In such cases, additional tests to determine specific properties, such as hardness, corrosion resistance, mechanical properties at higher or lower service temperatures, wear resistance, and suitability for welding combinations of different carbon and low alloy steels, may need to be conducted.

A9.2 Diffusible Hydrogen Test. Hydrogen induced cracking of weld metal and the heat-affected zone generally are not problems with carbon steels containing 0.30%, or less, carbon. Nevertheless, the welding electrodes of the specification are sometimes used to join higher carbon steels or low alloy steels, where hydrogen induced cracking may be a serious problem.

The coating moisture test has proven to be a satisfactory test over many years as a means of assessing the degree of care needed to avoid hydrogen induced cracking. This is, however, an indirect test. Moisture itself does not cause cracking, but the diffusible hydrogen that forms from the moisture in the arc can cause cracking.

Since entry of diffusible hydrogen into the weld pool can be affected by the form of the moisture in the coating (for example, chemically bonded versus surface absorbed), there is a fundamental utility for considering diffusible hydrogen for low hydrogen electrodes. Accordingly, the use of optional designators for diffusible

TABLE A4
DISCONTINUED ELECTRODE CLASSIFICATIONS[a]

AWS Classification	Last A5.1 (ASTM A-233) Publication Date	AWS Classification	Last A5.1 (ASTM A-233) Publication Date
E4511	1943	E9020	1945
E4521	1943	E9030	1945
E7010[b]	1945	E10010[b]	1945
E7011[b]	1945	E10011[b]	1945
E7012	1945	E10012	1945
E7020[b]	1945	E10020	1945
E7030	1945	E10030	1945
E8010[b]	1945	E4510	1958
E8011[b]	1945	E4520	1958
E8012	1945	E6014	1958
E8020[b]	1945	E6015	1958
E8030	1945	E6016	1958
E9010[b]	1945	E6018	1958
E9011[b]	1945	E6024	1958
E9012	1945	E6028	1958
		E6030	1958

NOTES:
a. See A10 (in the Appendix) for information on discontinued classifications.
b. These electrode classifications were transferred from the ASTM A233–45T to the new AWS A5.5–48T. They were later discontinued from that specification and replaced with the new "G" classifications in order to permit a single classification system with weld metal chemistry requirements in AWS A5.5–58T.

hydrogen is introduced to indicate the maximum average value obtained under a clearly defined test condition in ANSI/AWS A4.3, *Standard Methods for Determination of the Diffusible Hydrogen Content of Martensitic, Bainitic, and Ferritic Weld Metal Produced by Arc Welding.*

The user of this information is cautioned that actual welding conditions may result in different diffusible hydrogen values than those indicated by the designator.

The use of a reference atmospheric condition during welding is necessitated because the arc always is imperfectly shielded. Moisture from the air, distinct from that in the covering, can enter the arc and subsequently the weld pool, contributing to the resulting observed diffusible hydrogen. This effect can be minimized by maintaining as short an arc length as possible consistent with a steady arc. Experience has shown that the effect of arc length is minor at the H16 level, but it is very significant at the H4 level. An electrode meeting the H4 requirement under the reference atmospheric conditions may not do so under conditions of higher humidity at the time of welding. This is especially true if a long arc is maintained.

The reference atmospheric condition during welding of the test assembly is 10 grains of water vapor per pound (1.43g/kg) of dry air. This corresponds to 70°F (21°C) and 10% RH on a standard psychrometric chart at 29.92 in. Hg (760 mm) barometric pressure. Actual conditions, measured using a sling psychrometer, that equal or exceed this reference condition provide assurance that the conditions during welding will not diminish the final results of the test.

A9.3 Absorbed Moisture Test. The development of low hydrogen electrode coverings that resist moisture absorption during exposure to humid air is a recent improvement in covered electrode technology. Not all commercial low hydrogen electrodes possess this characteristic. To assess this characteristic, the absorbed moisture test described in Section 16, Absorbed Moisture Test, was devised. The exposure conditions selected for the test are arbitrary. Other conditions may yield quite different results.

A task group of the AWS A5A Subcommittee evaluated this test and concluded that it can successfully differentiate moisture resistant electrodes from those which are not. The task group also observed considerable variability of covering moisture results after exposure of electrodes in cooperative testing among several laboratories. The precision of the test is such that, with moisture resistant electrodes from a single lot, the participating laboratories could observe exposed covering moisture values ranging, for example, from 0.15% or less to 0.35% or more. The cause of this variability is uncertain at present, but is considered by the task group to be related to variations in the exposure condi-

tions. Because of this variability, the task group concluded that it is not realistic to set a limit for covering moisture of exposed moisture resistant electrodes lower than 0.4% at this time.

A10. Discounted Classifications

A number of electrode classifications have been discontinued during the numerous revisions of this specification, reflecting either changes in commercial practice, or changes in the scope of filler metals classified in the specification. These discontinued electrode classifications are listed in Table A4, along with the year they were last published in this specification.

SPECIFICATION FOR CARBON AND LOW ALLOY STEEL RODS FOR OXYFUEL GAS WELDING

SFA-5.2

(Identical with AWS Specification A5.2-92)

1. Scope

This specification prescribes requirements for the classification of carbon and low alloy steel rods for oxyfuel gas welding.

PART A — GENERAL REQUIREMENTS

2. Classification

2.1 The welding rods covered by this specification are classified according to the mechanical properties of the weld metal in the "as-welded" condition, as shown in Table 1.

2.2 Welding rods classified under one classification shall not be classified under any other classification in this specification.

2.3 The welding rods classified under this specification are intended for oxyfuel gas welding, but that is not to prohibit their use for any other process for which they are found suitable.

TABLE 1
TENSION TEST REQUIREMENTS

AWS Classification	Minimum Tensile Strength[a] ksi	MPa	Elongation in 1-in. (25 mm) Percent, Min.
R45	Not Specified		Not Specified
R60	60	410	20
R65	65	450	16
R100	100	690	14
RXXX-G[b]	XXX[b]		Not Specified

NOTES:
a. Specimens shall be tested in the as-welded condition.
b. Classification designators (XXX) shall be based on minimum tensile strength of all-weld-metal tension test of the test assembly. These designators shall be limited to 45, 60, 65, 70, 80, 90, and 100.

3. Acceptance

Acceptance[1] of the welding rods shall be in accordance with the provisions of ANSI/AWS A5.01, *Filler Metal Procurement Guidelines.*[2]

4. Certification

By affixing the AWS specification and classification designations to the packaging or the classification to the product, the manufacturer certifies that the product meets the requirements of this specification.[3]

5. Units of Measure and Rounding-Off Procedure

5.1 U.S. Customary Units are the standard units of measure in this specification. The SI units are given as equivalent values to the U.S. Customary Units. The standard sizes and dimensions in the two systems are not identical, and for this reason conversion from a standard size or dimension in one system will not always coincide with a standard size or dimension in the other. Suitable conversions, encompassing standard sizes of both, can be made, however, if appropriate tolerances are applied in each case.

[1] See section A3 (in the Appendix) for further information concerning acceptance, testing of the material shipped, and A5.01, *Filler Metal Procurement Guidelines.*

[2] AWS standards may be obtained from the American Welding Society, 550 N.W. LeJeune Road, P.O. Box 351040, Miami, Florida 33135.

[3] See section A4 (in the Appendix) for further information concerning certification and the testing called for to meet this requirement.

TABLE 2
REQUIRED TESTS

AWS Classification	Chemical Analysis	Tension Test
R45	Required	Not required
R60	Required	Required
R65	Required	Required
R100	Required	Required
RXXX-G	Not required	Required

5.2 For the purpose of determining conformance with this specification, an observed or calculated value shall be rounded to the "nearest unit" in the last right-hand place of figures used in expressing the limiting value for quantities in accordance with the round-off rules given in ASTM E29, *Standard Practice for Using Significant Digits in Test Data to Determine Conformance with Specifications*.[4]

PART B — TESTS, PROCEDURES, AND REQUIREMENTS

6. Summary of Tests

The tests required for each classification are specified in Table 2. The purpose of these tests is to determine the chemical composition of the welding rod and the mechanical properties of the weld metal. The base metal for the weld test assembly, the welding and testing procedures to be employed, and the results required are given in Section 8, Weld Test Assembly, Section 9, Chemical Analysis, and Section 10, Tension Test.

7. Retest

If any test fails to meet the requirement, that test shall be repeated twice. The results of both retests shall meet the requirement. Specimens or samples for retest may be taken from the original test assembly or sample, or from a new test assembly or sample. For chemical analysis, the retest need only be for those specific elements that failed to meet the test requirement.

[4] ASTM standards may be obtained from the American Society for Testing and Materials, 1916 Race Street, Philadelphia, Pennsylvania 19103.

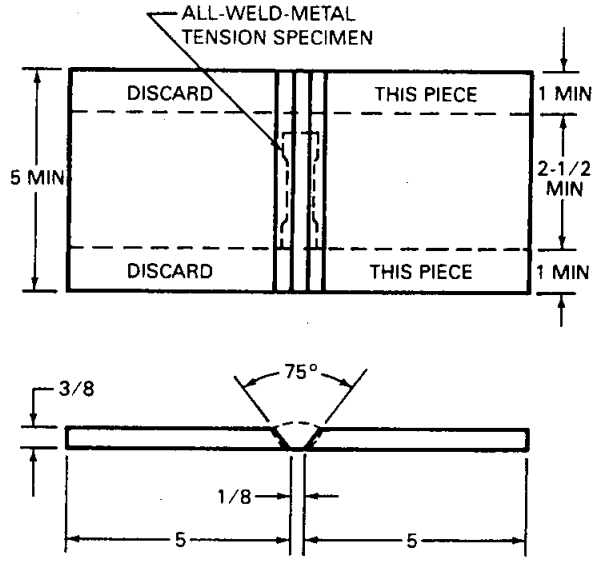

NOTE: ALL DIMENSIONS EXCEPT ANGLES ARE IN INCHES.

SI EQUIVALENTS

in.	mm	in.	mm
1/8	3.2	2-1/2	64
3/8	9.5	5	127
1	25		

FIG. 1 GROOVE WELD TEST ASSEMBLY FOR MECHANICAL PROPERTIES

8. Weld Test Assembly

8.1 Except for the R45 classification, one weld test assembly is required. It is the groove weld in Figure 1 for mechanical properties. The assembly shall be tested in the as-welded condition. No test assembly is required for the R45 classification.

8.2 Preparation of the weld test assembly shall be as prescribed in Figure 1. Base metal for the assembly shall be as required in Table 3 and shall meet the requirements of the appropriate ASTM specification shown there or an equivalent specification. Testing of the assembly shall be as prescribed in Section 10, Tension Test.

8.2.1 Welding shall be done using a $^{3}/_{32}$ in. or $^{1}/_{8}$ in. (2.4 mm or 3.2 mm) diameter welding rod.

8.2.2 The welding shall be done in the flat position.

TABLE 3
BASE METAL REQUIRED FOR TEST ASSEMBLIES

AWS Classification	Base Metal		UNS Number*
	Type	ASTM Specification	
R60	Carbon steel	A36, A285, grade C, or equivalent	K02600
R65	Carbon steel	A36, A285, grade C, or equivalent	K02600
R100	Low alloy steel	Any grade of A514, or equivalent	—
RXXX-G	Material shall have a tensile and chemical composition similar to that of the rod being classified.		

* SAE/ASTM Unified Numbering System for Metal and Alloys.

8.2.3 The weld test assembly shall be preheated to between 60°F (16°C) and 200°F (93°C) and the assembly shall be welded, using a maximum of five layers and having no layer exceeding $\frac{1}{8}$ in. (3.2 mm) in thickness. The filler metal shall be deposited using backhand welding with a neutral or slightly reducing flame. After welding each layer, the plate shall be allowed to cool in still air until the interpass temperature drops below 350°F (180°C) before proceeding with the next layer. The joint shall be completely welded without treatment of the reverse side (root surface). Maximum weld reinforcement shall be $\frac{1}{8}$ in. (3.2 mm).

8.2.4 After the last pass has been completed, the assembly shall be allowed to cool in still air to ambient temperature.

9. Chemical Analysis

9.1 A sample of the welding rod or the rod stock from which it is made shall be prepared for chemical analysis. Welding rod, when analyzed for elements that are present in the coating (copper flashing, for example), shall be analyzed without removing the coating. When the welding rod is analyzed for elements other than those in the coating, the coating may be removed, provided that this does not affect the results of the analysis.

9.2 The sample shall be analyzed by accepted analytical methods. The referee method shall be ASTM E350, *Standard Methods for Chemical Analysis of Carbon Steel, Low Alloy Steel, Silicon Electrical Iron, Ingot Iron, and Wrought Iron.*

9.3 The results of the analysis shall meet the requirements of Table 4 for the classification of the rod under test.

10. Tension Test

10.1 One all-weld-metal tension test specimen shall be removed from the groove weld described in Section 8, Weld Test Assembly, and shown in Figure 1. The dimensions of the test specimen shall be as specified in Figure 2.

10.2 The specimen shall be tested in the manner described in the tension test section of the latest edition of ANSI/AWS B4.0, *Standard Methods for Mechanical Testing of Welds.*

10.3 The results of the tension test shall meet the requirements specified in Table 1.

PART C — MANUFACTURE, IDENTIFICATION, AND PACKAGING

11. Method of Manufacture

The material classified according to this specification may be manufactured by any method that will produce welding rods that meet the requirements of this specification.

12. Standard Sizes and Lengths

Standard sizes for filler metals shall be as shown in Table 5.

TABLE 4
CHEMICAL COMPOSITION REQUIREMENTS FOR WELDING RODS AND ROD STOCK

AWS Classification	UNS Number[a]	Amount, Percent by Weight[b]									
		C	Mn	Si	P	S	Cu	Cr	Ni	Mo	Al
R45	K00045	0.08	0.50 to 0.90	0.10 to 0.35	0.035	0.040	0.30	0.20	0.30	0.20	0.02
R60	K00060	0.15	0.90 to 1.40	0.10 to 0.35	0.035	0.035	0.30	0.20	0.30	0.20	0.02
R65	K00065	0.15	0.90 to 1.60	0.10 to 0.70	0.035	0.035	0.30	0.40	0.30	0.20	0.02
R100	K12147	0.18 to 0.23	0.70 to 0.90	0.20 to 0.35	0.025	0.025	0.15	0.40 to 0.60	0.40 to 0.70	0.15 to 0.25	0.02
RXXX-G[c]	----------	----------	Not Specified	----------	----------	----------	----------	----------	----------	----------	----------

NOTES:
a. SAE/ASTM Unified Numbering System for Metals and Alloys.
b. Single values are maximums.
c. Designators, "XXX" correspond to minimum strength of weld metal in the nearest ksi. See Note "b" of Table 1.

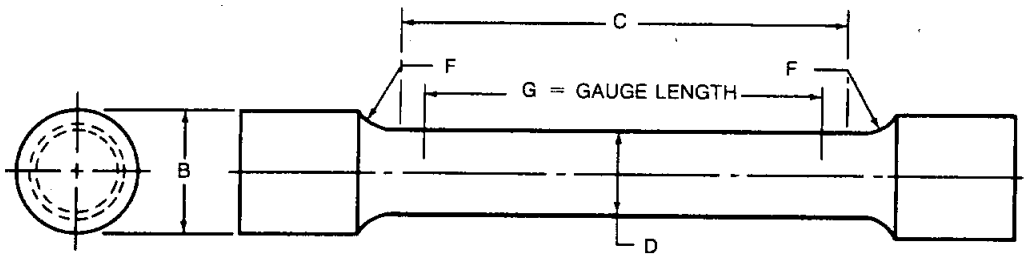

Dimensions of Specimen, in.

Test plate thickness	D	G	C	B	F, min	Approximate area, in.^{2}
3/8	0.250 ± 0.005	1.000 ± 0.005	1-11/4	3/8	0.18	0.05

Dimensions of specimen, mm

Test plate thickness	D	G	C	B	F, min	Approximate area, in.^{2}
9.5	6.40 ± 0.13	25.40 ± 0.13	32	9.5	4.6	32

Notes:
1. Dimensions G and C shall be as shown, but ends may be of any shape to fit the testing machine holders provided the load is axial.
2. The diameter of the specimen within the gauge length shall be slightly smaller at the center than at the ends. The difference shall not exceed one percent of the diameter.
3. The surface finish within the C dimension shall be no rougher than 63 μin. (1.6 μm).

FIG. 2 TENSION TEST SPECIMEN

TABLE 5
STANDARD FILLER METAL SIZES[a]

Standard Package Form	Diameter		Tolerance	
	in.	mm	in.	mm
Straight lengths[b]	1/16 (0.062)	1.6	±0.002	±0.05
	3/32 (0.094)	2.4		
	1/8 (0.125)	3.2		
	5/32 (0.156)	4.0		
	3/16 (0.188)	4.8		
	1/4 (0.250)	6.4		

NOTES:
a. Other sizes and lengths may be supplied as agreed upon between the supplier and purchaser.
b. The standard length of the welding rod shall be 36 in., +0, −½ in. (900 mm, +15 mm, −0 mm).

13. Finish and Uniformity

13.1 All welding rods shall have a smooth finish which is free from harmful segregation, oxides, piping, seams, slivers, depressions, scratches, scale, lime, or foreign matter except as permitted in 13.2 and 13.3.

13.2 A suitable protective coating may be applied to any welding rod in this specification.

13.3 The welding rods may be coated with the minimum amount of oil necessary to prevent rusting, but not sufficient to adversely affect weld properties, except that oil is not permitted when copper or other suitable coatings are used to prevent rusting.

14. Filler Metal Identification

Identification of individual welding rods is not a requirement of this specification but may be done as agreed upon between the purchaser and supplier.

15. Packaging

Welding rods shall be suitably packaged to ensure against damage during shipment and storage under normal conditions.

16. Marking of Packages

16.1 The following product information (as a minimum) shall be legibly marked so as to be visible from the outside of each unit package:

(1) AWS Specification and classification designations (year of issue may be excluded)

(2) Supplier's name and trade designation

(3) Size and net weight

(4) Lot, control, or heat number

16.2 The following precautionary information (as a minimum) shall be prominently displayed in legible print on all packages of welding rods, including individual unit packages enclosed within a larger package.

WARNING:

PROTECT yourself and others. Read and understand this information.

FUMES AND GASES can be dangerous to your health.

HEAT RAYS (INFRARED RADIATION from flame or hot metal) can injure eyes.

- Before use, read and understand the manufacturer's instructions, Material Safety Data Sheets (MSDSs), and your employer's safety practices.
- Keep your head out of the fumes.
- Use enough ventilation or exhaust at the flame, or both, to keep fumes and gases from your breathing zone and the general area.
- Wear correct eye, ear, and body protection.
- See American National Standard Z49.1, *Safety in Welding and Cutting*, published by the American Welding Society, 550 N.W. LeJeune Road, P.O. Box 351040, Miami, Florida 33135; OSHA Safety and Health Standards, 29 CFR 1910, available from the U.S. Government Printing Office, Washington, DC 20402.

DO NOT REMOVE THIS INFORMATION

Appendix
Guide to AWS Specification for Carbon and Low Alloy Steel Rods for Oxyfuel Gas Welding

(This Appendix is not a part of ANSI/AWS A5.2-92, *Specification for Carbon and Low Alloy Steel Rods for Oxyfuel Gas Welding*, but is included for information purposes only.)

A1. Introduction

This guide was designed to correlate the rod classifications with the intended applications so the specification can be used effectively. Such correlations are intended as examples rather than complete listings of the materials for which each filler metal is suitable.

A2. Classification System

A2.1 The system for identifying the rod classifications in this specification follows the standard pattern used in other AWS filler metal specifications. The letter "R" at the beginning of each classification designation stands for rod. The digits (45, 60, 65, and 100) designate a minimum tensile strength of the weld metal, in the nearest thousands of pounds per square inch, deposited in accordance with the test assembly preparation section of this specification.

A2.2 "G" Classification

A2.2.1 This specification includes filler metals classified as RXXX-G. The "G" indicates that the filler metal is of a "general" classification. It is general because not all of the particular requirements specified for each of the other classifications are specified for this classification. The intent in establishing this classification is to provide a means by which filler metals that differ in one respect or another (chemical composition, for example) from all other classifications (meaning that the composition of the filler metal, in the case of the example, does not meet the composition specified for any of the classifications in the specification) can still be classified according to the specification. The purpose is to allow a useful filler metal—one that otherwise would have to await a revision of the specification—to be classified immediately under the existing specification. This means, then, that two filler metals, each bearing the same "G" classification, may be quite different in some certain respect (chemical composition, again, for example).

A2.2.2 The point of difference (although not necessarily the amount of the difference) referred to above will be readily apparent from the use of the words "not required" and "not specified" in the specification. The use of these words is as follows:

"Not Specified" is used in those areas of the specification that refer to the results of some particular test. It indicates that the requirements for that test are *not specified* for that particular classification.

"Not Required" is used in those areas of the specification that refer to the test that must be conducted in order to classify a filler metal (or a welding material). It indicates that the test is *not required* because the requirements (results) for the test have not been specified for that particular classification.

Restating the case, when a requirement is not specified, it is not necessary to conduct the corresponding test in order to classify a filler metal to that classification. When a purchaser wants the information provided by that test in order to consider a particular product of that classification for a certain application, the purchaser will have to arrange for that information with the supplier of that product. The purchaser will also have to establish with that supplier just what the testing procedure and the acceptance requirements are to be for that test. The purchaser may want to incorporate that information (via ANSI/AWS A5.01, *Filler Metal Procurement Guidelines*) in the purchase order.

A3. Acceptance

Acceptance of all welding materials classified under this specification is in accordance with ANSI/AWS A5.01, as the specification states. Any testing a purchaser requires of the supplier for material shipped in accordance with this specification needs to be clearly stated in the purchase order according to the provisions of ANSI/AWS A5.01. In the absence of any such statement in the purchase order, the supplier may ship the material of that classification as specified in Schedule F, Table 1, of ANSI/AWS A5.01. Testing in accordance with any other Schedule in that Table shall be specifically required by the purchase order. In such cases, acceptance of the material shipped will be in accordance with those requirements.

A4. Certification

The act of placing the AWS specification and classification designations on the packaging enclosing the product or the classification on the product itself, constitutes the supplier's (manufacturer's) certification that the product meets all of the requirements of the specification. The only testing requirement implicit in this certification is that the manufacturer has actually conducted the tests required by the specification on material that is representative of that being shipped, and that the material has met the requirements of the specification. Representative material, in this case, is any production run of that classification using the same formulation. Certification is not to be construed to mean that tests of any kind were necessarily conducted on samples of the specific material shipped. Tests on such material may or may not have been made. The basis for the certification required by the specification is the classification test of "representative material" cited above, and the "Manufacturer's Quality Assurance Program" in ANSI/AWS A5.01.

A5. Ventilation During Welding

A5.1 Five major factors govern the quantity of fumes in the atmosphere to which welders and welding operators are exposed during welding:

(1) Dimensions of the space in which welding is done (with special regard to the height of the ceiling)

(2) Number of welders and welding operators working in that space

(3) Rate of evolution of fumes, gases, or dust, according to the materials and processes used

(4) The proximity of welders or welding operators to the fumes as they issue from the welding zone, and to the gases and dust in the space in which they are working

(5) The ventilation provided to the space in which the welding is done

A5.2 American National Standard Z49.1, *Safety in Welding and Cutting* (published by the American Welding Society), discusses the ventilation that is required during welding and should be referred to for details. Attention is drawn particularly to the section of that document titled, Ventilation.

A6. Welding Considerations

A6.1 The test assembly required in this specification is welded according to established techniques of the oxyfuel gas process.

A6.2 The oxyfuel gas to the torch should be adjusted to give a neutral or slightly reducing flame. This assures the absence of the oxidizing flame which could adversely influence weld quality. The extent of the excess fuel gas is measured by the length of the streamer (the so-called "feather") of unburned fuel gas visible at the extremity of the inner cone. This streamer should measure about $\frac{1}{8}$ to $\frac{1}{4}$ the length of the inner cone of the flame. Excessively long streamers should be avoided, since they may add carbon to the weld metal.

A6.3 In forehand welding, the torch flame points ahead in the direction of welding, and the welding rod precedes the torch flame. To distribute the heat and molten weld metal, it is necessary to use opposing oscillating motions for the flame and welding rod. This may cause excessive melting of the base metal and mixing of base metal and weld metal. Weld metal properties may be altered.

A6.4 In backhand welding, the torch flame points back at the molten metal, and the welding rod is interposed between the flame and molten metal. There is significantly less manipulation of the flame, the welding rod, and the molten metal. Therefore, a backhand weld is more likely to approach the chemical composition of undiluted weld metal.

A7. Description and Intended Use of Carbon and Low Alloy Steel Rods

A7.1 Oxyfuel gas welding rods have no coverings to influence usability of the rod. Thus, the ability to weld in the vertical or overhead position is essentially a matter of welder skill and can be affected to some degree by the chemical composition of the rod.

A7.2 Class R45 welding rods are a low carbon steel composition used for the welding of steel, where the minimum tensile strength requirement does not exceed 45 ksi (310 MPa).

A7.3 Class R60 welding rods are used for the oxyfuel gas welding of carbon steels, where the minimum tensile strength requirement does not exceed 60 ksi (415 MPa). Class R60 rods are carbon steel composition.

A7.4 Class R65 welding rods are used for the oxyfuel gas welding of carbon and low alloy steels, where the minimum tensile strength requirement does not exceed 65 ksi (450 MPa). Class R65 welding rods may have either a low alloy or a carbon steel composition.

A7.5 Class R100 welding rods are used for the oxyfuel gas welding of low alloy steel, where the minimum tensile strength requirement does not exceed 100 ksi (690 MPa) in the as-welded condition. Users are cautioned that response of the weld metal and base metal to postweld heat treatment may be different.

A8. Special Tests

It is recognized that supplementary tests may be necessary to determine the suitability of these welding rods for applications involving properties not considered in this specification. In such cases, additional tests to determine specific properties such as corrosion resistance, mechanical properties at high and low temperatures, wear resistance, and suitability for welding combinations of dissimilar metals may need to be conducted.

A9. Discontinued Classifications

A number of rod classifications have been discontinued during the numerous revisions of this specification. These discontinued classifications are listed in Table A1 along with the year they were last published in this specification.

TABLE A1
DISCONTINUED CLASSIFICATIONS

AWS Classifications	Last Published Date
GA 50	1946
GA 60	1946
GA 65	1946
GB 45	1946
GB 60	1946
GB 65	1946
RG 45	1969
RG 60	1969
RG 65	1969

SPECIFICATION FOR ALUMINUM AND ALUMINUM-ALLOY ELECTRODES FOR SHIELDED METAL ARC WELDING

SFA-5.3

(Identical with AWS Specification A5.3/A5.3M-99.)

1. Scope

This specification prescribes requirements for the classification of aluminum and aluminum-alloy electrodes for shielded metal arc welding.

PART A — GENERAL REQUIREMENTS

2. Normative References

2.1 The following ANSI/AWS standards[1] are referenced in the mandatory sections of this document:

(a) ANSI/AWS A5.01, *Filler Metal Procurement Guidelines.*

(b) ANSI/AWS B4.0, *Standard Methods for Mechanical Testing of Welds.*

2.2 The following ASTM standards[2] are referenced in the mandatory sections of this document:

(a) ASTM E 29, *Standard Practice for Using Significant Digits in Test Data to Determine Conformance with Specifications.*

(b) ASTM E 34, *Standard Methods for Chemical Analysis of Aluminum and Aluminum Alloys.*

(c) ASTM B 209, *Standard Specification for Aluminum and Aluminum-Alloy Sheet and Plate.*

2.3 The following ISO standard[3] is referenced in the mandatory sections of this document:

(a) ISO 544, *Filler Materials for Manual Welding — Size Requirements.*

3. Classification

3.1 The electrodes covered by the A5.3/A5.3M specification are classified using a system that is independent of U.S. Customary Units and the International System of Units (SI). Classification is according to the chemical composition of the core wire, as specified in Table 1, and mechanical properties of a groove weld.

3.2 An electrode classified under one classification shall not be classified under any other classification in this specification.

4. Acceptance

Acceptance[4] of the electrode shall be in accordance with the provisions of ANSI/AWS A5.01, *Filler Metal Procurement Guidelines.*

5. Certification

By affixing the AWS specification and classification designations to the packaging, or the classification to the product, the manufacturer certifies that the product meets the requirements of this specification.[5]

[1] AWS Standards can be obtained from the American Welding Society, 550 N.W. LeJeune Road, Miami, FL 33126.

[2] ASTM Standards can be obtained from the American Society for Testing and Materials, 100 Barr Harbor Drive, West Conshohocken, PA 19428-2959.

[3] ISO Standards can be obtained from the American National Standards Institute (ANSI), 11 West 42nd Street, New York, NY 10036.

[4] See Section A3, Acceptance (in Annex) for further information concerning acceptance, testing of the material shipped, and ANSI/AWS A5.01, *Filler Metal Procurement Guidelines.*

[5] See Section A4, Certification (in Annex) for further information concerning certification and the testing called for to meet this requirement.

TABLE 1
CHEMICAL COMPOSITION REQUIREMENTS FOR CORE WIRE

AWS Classification[f]	UNS Designation[c]	Weight Percent[a,b]										
										Other Elements		
		Si	Fe	Cu	Mn	Mg	Zn	Ti	Be	Each	Total	Al
E1100	A91100	(d)	(d)	0.05–0.20	0.05	—	0.10	—	0.0008	0.05	0.15	99.00 min[e]
E3003	A93003	0.6	0.7	0.05–0.20	1.0–1.5	—	0.10	—	0.0008	0.05	0.15	Remainder
E4043	A94043	4.5–6.0	0.8	0.30	0.05	0.05	0.10	0.20	0.0008	0.05	0.15	Remainder

NOTES:
a. The core wire, or the stock from which it is made, shall be analyzed for the specific elements for which values are shown in this table. If the presence of other elements is indicated in the course of work, the amount of those elements shall be determined to ensure that they do not exceed the limits specified for "Other Elements."
b. Single values are maximum, except where otherwise specified.
c. SAE/ASTM Unified Numbering System for Metals and Alloys.
d. Silicon plus iron shall not exceed 0.95 percent.
e. The aluminum content for unalloyed aluminum is the difference between 100.00 percent and the sum of all other metallic elements present in amounts of 0.010 percent or more each, expressed to the second decimal before determining the sum.
f. Refer to Table A1 for Proposed ISO Designations.

6. Units of Measure and Rounding-Off Procedure

6.1 This specification makes use of both U.S. Customary Units and the International System of Units (SI). The measurements are not exact equivalents; therefore, each system must be used independently of the other without combining in any way. The specification with the designation A5.3 uses U.S. Customary Units. The specification A5.3M uses SI Units. The latter are shown in appropriate columns in tables or within brackets [ ] when used in the text.

6.2 For the purpose of determining conformance with this specification, an observed or calculated value shall be rounded to the nearest 1000 psi [10 MPa] for tensile strength, and to the "nearest unit" in the last right-hand place of figures used in expressing the limiting value for other quantities in accordance with the rounding-off method given in ASTM E 29, *Practice for Using Significant Digits in Test Data to Determine Conformance with Specifications.*

PART B — TESTS, PROCEDURES, AND REQUIREMENTS

7. Summary of Tests

The tests required for each classification are specified in Table 2. The purpose of these tests is to determine the chemical composition of the core wire and the mechanical properties of the weldment. The base metal for the weld test assemblies, the welding and testing procedures to be employed, and the results required are given in Sections 9 through 12.

8. Retest

8.1 If the results of any test fail to meet the requirement, that test shall be repeated twice. The results of both tests shall meet the requirement. Specimens or samples for retest may be taken from the original test assembly or sample, or from a new test assembly or sample. For chemical analysis, retest need be only for those specific elements that failed to meet the test requirement.

8.2 If the results of one or both retests fail to meet the requirement, the material under test shall be considered as not meeting the requirements of this specification for that classification.

8.3 In the event that, during preparation or after completion of any test, it is clearly determined that prescribed or proper procedures were not followed in preparing the weld test assembly or test specimens or in conducting the test, the test shall be considered invalid, without regard to whether the test was actually completed, or whether the test results met, or failed to meet, the requirement. That test shall be repeated, following the proper prescribed procedures. In this case the requirement for doubling the number of test specimens does not apply.

9. Weld Test Assembly

9.1 One weld test assembly is required as specified in Table 2. It is the groove weld in Fig. 1 for mechanical properties.

9.2 Preparation of the weld test assembly shall be as prescribed in 9.3, Fig. 1, and Table 2 [Notes (5) and (6)] using base metal of the appropriate type specified in Table 3. Testing of the assembly shall be as specified in Sections 11, Tension Test, and 12, Bend Test. The assembly shall be tested in the as-welded condition.

9.3 The test assembly shall be preheated to a temperature between 350° and 400°F [175° and 200°C], and shielded metal arc (SMA) welded from one side, in the flat position. The test assembly should be precambered or restrained so that warping due to welding will not cause the finished test assembly to be out-of-plane by more than 5 degrees. If the completed test assembly is more than 5 degrees out-of-plane it shall be straightened at room temperature.

10. Chemical Analysis

10.1 A sample of the core wire, or the stock from which it is made, shall be prepared for chemical analysis.

10.2 The sample shall be analyzed by accepted analytical methods. The referee method shall be ASTM E 34, *Standard Methods for Chemical Analysis of Aluminum and Aluminum Alloys.*

10.3 The results of the analysis shall meet the requirements of Table 1 for the classification of electrode under test.

11. Tension Test

11.1 Two transverse rectangular tension test specimens shall be machined from the groove weld described in Section 9, Weld Test Assembly, and shown in Fig. 1. The dimensions of the specimens shall be as specified in the tension test section of AWS B4.0, *Standard Methods for Mechanical Testing of Welds.* All dimen-

TABLE 2
REQUIRED TESTS

AWS Classification	Electrode Size in.	Electrode Size mm	Chemical Analysis[a]	Tension Test[b]	Bend Test[c]
E1100, E3003, and E4043	3/32	2.4	Required	Not Required[d]	Not Required[d]
		2.5	Required	Not Required[d]	Not Required[d]
	1/8	3.2	Required	Not Required[d]	Not Required[d]
	5/32	4.0	Required	Required[e]	Required[e]
	3/16	4.8	Required	Not Required[d]	Not Required[d]
		5.0	Required	Not Required[d]	Not Required[d]
		6.0	Required	Required[f]	Required[f]
	1/4	6.4	Required	Required[f]	Required[f]
	5/16	8.0	Required	Not Required[d]	Not Required[d]
	3/8	9.5	Required	Not Required[d]	Not Required[d]

NOTES:
a. Chemical analysis of the core wire or the stock from which it is made.
b. See Section 11.
c. See Section 12.
d. If the product is not produced in the sizes listed for required tensile tests and bend tests, then the size closest but not greater than the size specified to be tested, shall be subject to the required tests.
e. Electrodes 5/32 in. (4.0 mm) and smaller shall be classified on the basis of the results obtained with the 5/32 in. (4.0 mm) size of the same classification.
f. Electrodes 3/16 in. (4.8 mm) and larger shall be classified on the basis of the results obtained with the 1/4 in. (6.4 mm) size of the same classification.

sions shall be the same as shown in the AWS B4.0 figure for transverse rectangular tension test specimens (plate) except the reduced section radius shall be 2 in. [50 mm].

11.2 The specimens shall be tested in the manner described in the tension test section of ANSI/AWS B4.0, *Standard Methods for Mechanical Testing of Welds*.

11.3 The results of the tension test shall meet the requirements specified in Table 4.

12. Bend Test

12.1 One transverse face and one transverse root bend specimen, as required in Table 2, shall be machined from the groove weld test assembly described in Section 9 and shown in Fig. 1. The dimensions of these bend specimens shall be the same as those shown in the bend test section of AWS B4.0 in the figure for transverse face and transverse root-bend specimens (plate).

12.2 The specimens shall be tested in the manner described in the guided bend test section of ANSI/AWS B4.0 by bending them uniformly through 180 degrees over a 1-1/4 in. [32 mm] radius in any suitable jig. Typical bend test jigs as shown in bend test section of AWS B4.0 shall be used. Positioning of the face-bend specimen shall be such that the face of the weld is in tension. Positioning of the root-bend specimen shall be such that the root of the weld is in tension. For both types of transverse bend specimen, the weld shall be at the center of the bend.

12.3 Each specimen, after bending, shall conform to the 1-1/4 in. [32 mm] radius, with an appropriate allowance for spring back, and the weld metal shall show no crack or other open defect exceeding 1/8 in. [3.2 mm] measured in any direction on the convex surface, when examined with the unaided eye. Cracks that occur on the corners of a specimen during testing and which show no evidence of inclusions or other fusion-type discontinuities, shall be disregarded.

PART C — MANUFACTURE, IDENTIFICATION, AND PACKAGING

13. Method of Manufacture

The electrodes classified according to this specification may be manufactured by any method that will produce electrodes that meet the requirements of this specification.

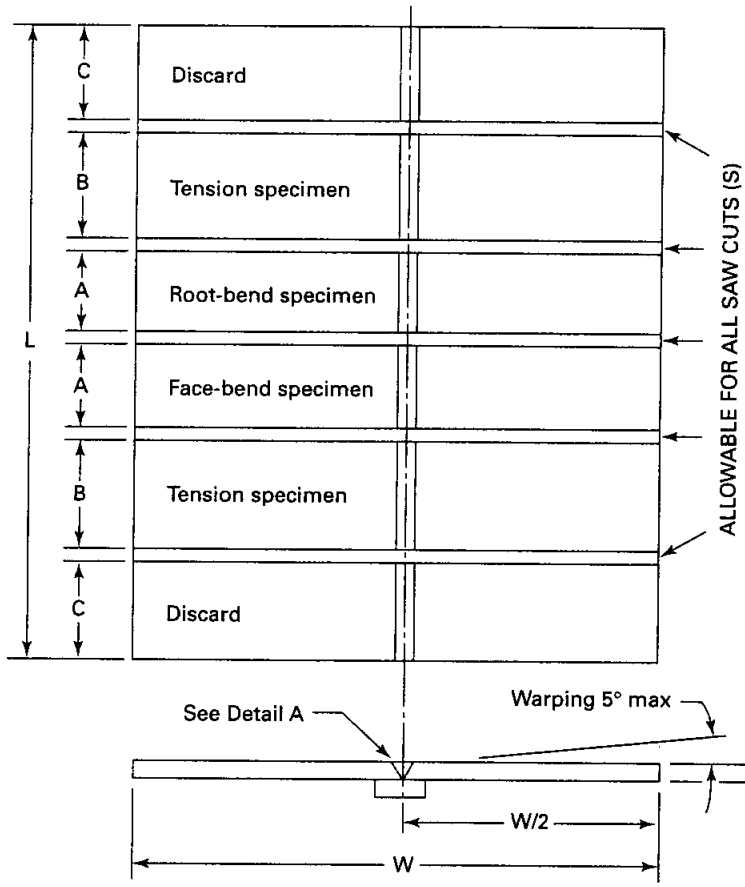

DIMENSIONS		
	in.	mm
A	1.5	38
B	2	50
C, min	1.8	45
L, min	12	300
R, radius	1/4	6.5
S	1/4	6.5
T	3/8	9.5
V	3/16	5
W, min	10	250
Z, min	1	25

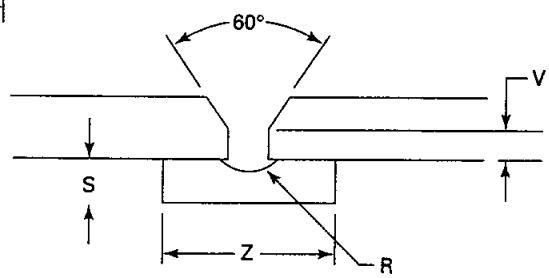

Detail A

GENERAL NOTES:
1. Root opening = 1/16 in. (1.6 mm).
2. Backing material shall be the same alloy as the base metal. It may be rolled or extruded.
3. Test material blanks shall be removed from the locations shown.

FIG. 1 GROOVE WELD TEST ASSEMBLY FOR MECHANICAL PROPERTIES

TABLE 3
BASE METAL FOR TEST ASSEMBLIES

Electrode	Base Metal		
AWS Classification	Aluminum Alloy[a]	ASTM Specification	UNS Designation
E1100	1100	B209	A91100
E3003, E4043	3003[b]	B209	A93003

NOTES:
a. Aluminum Association, Inc. registration numbers.
b. When welding 3003 with E4043 electrodes, 3003-0 (annealed temper) plate is preferred.

TABLE 4
TENSION TEST REQUIREMENTS

AWS Classification	Tensile Strength, Min.[a]	
	psi	MPa
E1100	12 000	80
E3003	14 000	95
E4043	14 000	95

NOTE:
a. Fracture may occur in either the base metal or the weld metal.

14. Standard Sizes and Lengths

14.1 Standard sizes (diameter of the core wire) and lengths of electrodes are shown in Table 5. Other sizes and lengths meet the requirements of this specification when agreed by the purchaser and supplier.

14.2 The diameter of the core wire shall not vary more than ±0.002 in. [±0.05 mm] from the diameter specified. The length shall not vary more than ±1/4 in. [±6 mm] from that specified.

15. Core Wire and Covering

15.1 The core wire and covering shall be free of defects that would interfere with uniform deposition of the electrode.

15.2 The core wire and the covering shall be concentric to the extent that the maximum core-plus-one-covering dimension shall not exceed the minimum core-plus-one-covering dimension by more than the following:

(a) Seven percent of the mean dimension in sizes 3/32 in. [2.4 and 2.5 mm]

(b) Five percent of the mean dimension in sizes 1/8 and 5/32 in. [3.2 and 4.0 mm]

(c) Four percent of the mean dimension in sizes 3/16 in. [4.8 mm] and larger

Concentricity may be measured by any suitable means.

15.3 The coverings shall be such that they are not readily damaged by ordinary handling and the coverings shall not blister when heated to 400°F [200°C]. They shall be consumed uniformly during welding, and they also shall not blister or melt back from the core wire. The flux residue they produce shall be readily removable.

16. Exposed Core

16.1 The grip end of each electrode shall be bare (free of covering) for a distance of not less than 1/2 in. [12 mm], nor more than 1-1/4 in. [30 mm] for electrodes 5/32 in. [4.0 mm] and smaller, and not less than 3/4 in. [19 mm] nor more than 1-1/2 in. [38 mm] for electrodes 3/16 in. [4.8 mm] and larger, to provide for electrical contact with the electrode holder.

16.2 The arc end of each electrode shall be sufficiently bare and the covering sufficiently tapered to permit easy striking of the arc. The length of the bare portion (measured from the end of the core wire to the location where the full cross-section of the covering is obtained) shall not exceed 1/8 in. [3 mm] or the diameter of the core wire, whichever is less. Electrodes with chipped coverings near the arc end, baring the core wire no more than the lesser of 1/4 in. [6 mm] or twice the diameter of the core wire, meet the requirements of this specification, provided no chip uncovers more than 50% of the circumference of the core.

TABLE 5
STANDARD SIZES

AWS Classification	Diameter of Core Wire		Standard Lengths	
	in.	mm	in.	mm
E1100, E3003, and E4043	3/32 (0.094)	2.4[a]	14	350
	(0.098)	2.5		
	1/8 (0.125)	3.2		
	5/32 (0.156)	4.0		
	3/16 (0.188)	4.8[a]		
	(0.197)	5.0		
	(0.236)	6.0		
	1/4 (0.250)	6.4[a]		
	5/16 (0.312)	8.0	18	450
	3/8 (0.375)	9.5[a]		

NOTE:
a. These sizes are not included in ISO 544.

17. Electrode Identification

All electrodes shall be identified as follows:

17.1 At least one imprint of the electrode classification shall be applied to the electrode covering within 2-1/2 in. [65 mm] of the grip end of the electrode.

17.2 The numbers and letters of the imprint shall be of bold block type of a size large enough to be legible.

17.3 The ink used for imprinting shall provide sufficient contrast with the electrode covering so that, in normal use, the numbers and letters are legible both before and after welding.

17.4 The prefix letter E in the electrode classification may be omitted from the imprint.

17.5 In lieu of imprinting, electrodes may be identified by the following:

(a) Attaching to the bare grip end of each electrode a pressure sensitive tape bearing the classification number

(b) Embossing the classification number on the bare grip end of each electrode. In this case, a slight flattening of the grip end will be permitted in the area of the embossing.

18. Packaging

18.1 Electrodes shall be suitably packaged to protect them from damage during shipment and storage under normal conditions.

18.2 Standard package net weights shall be 1 lb [0.5 kg], 5 lb [2.5 kg], and 10 lb [5 kg]. Other package weights meet the requirements of this specification when agreed by the purchaser and supplier.

19. Marking of Packages

19.1 The following product information (as a minimum) shall be legibly marked on the outside of each unit package:

(a) AWS specification and classification designations (year of issue may be excluded)

(b) Supplier's name and trade designation

(c) Size and net weight

(d) Lot, control, or heat number

19.2 The following precautionary information (as a minimum) shall be prominently displayed in legible print on all packages of electrodes, including individual unit packages enclosed within a larger package.

WARNING:

PROTECT yourself and others. Read and understand this information.

FUMES AND GASES can be hazardous to your health.

ARC RAYS can injure eyes and burn skin.

ELECTRIC SHOCK can KILL.

- Before use, read and understand the manufacturer's instructions, Material Safety Data Sheets (MSDSs), and your employer's safety practices.
- Keep your head out of the fumes.
- Use enough ventilation, exhaust at the arc, or both, to keep fumes and gases away from your breathing zone and the general area.
- Wear correct eye, ear, and body protection.
- Do not touch live electrical parts.
- See American National Standard ANSI Z49.1, *Safety in Welding, Cutting, and Allied Processes*, published by the American Welding Society, 550 N.W. LeJeune Road, Miami, FL 33126; and *OSHA Safety and Health Standards*, available from the Superintendent of Documents, U.S. Government Printing Office, Washington, DC 20402. Phone: (202) 512-1800.

DO NOT REMOVE THIS INFORMATION

Annex
Guide to Specification for Aluminum and Aluminum-Alloy Electrodes for Shielded Metal Arc Welding

(This Annex is not a part of AWS A5.3/A5.3M-99, *Specification for Aluminum and Aluminum-Alloy Electrodes for Shielded Metal Arc Welding*, but is included for information purposes only).

A1. Introduction

The purpose of this guide is to correlate the electrode classifications with their intended applications so the specification can be used effectively. Reference to appropriate base metal specifications is made whenever that can be done and when it would be helpful. Such references are intended only as examples rather than complete listings of the materials for which each filler metal is suitable.

A2. Classification System

A2.1 The system for identifying the electrode classifications in this specification follows the standard pattern used in other AWS filler metal specifications. The letter E at the beginning of each classification designation stands for electrode. The numerical portion of the designation in this specification conforms to the Aluminum Association registration for the composition of the core wire used in the electrode.

A2.2 An international system for designating welding filler metals is under development by the International Institute of Welding (IIW) for use in future specifications to be issued by the International Standards Organization (ISO). Table A1 shows the proposed designations for aluminum filler metals. In that system the initial "E" designates a covered electrode, the letter "A" the alloy system, followed by a four-digit number. For wrought aluminum alloys, the four-digit number is the same as that commonly recognized worldwide.

A3. Acceptance

Acceptance of all welding materials classified under this specification is in accordance with ANSI/AWS A5.01, *Filler Metal Procurement Guidelines*, as the specification states. Any testing a purchaser requires of the supplier, for material shipped in accordance with this Specification, shall be clearly stated in the purchase order, according to the provisions of ANSI/AWS A5.01. In the absence of any such statement in the purchase order, the supplier may ship the material with whatever testing normally is performed on material of that classification, as specified in Schedule F, Table 1, of ANSI/AWS A5.01. Testing in accordance with any other Schedule in that Table shall be specifically required by the purchase order. In such cases, acceptance of the material shipped shall be in accordance with those requirements.

A4. Certification

The act of placing the AWS specification and classification designations on the packaging enclosing the product, or the classification on the product itself, constitutes the supplier's (manufacturer's) certification that the product meets all of the requirements of the specification.

The only testing requirement implicit in this certification is that the manufacturer has actually conducted the tests required by the specification on material that is representative of that being shipped and that material met the requirements of the specification. Representative material, in this case, is any production run of that classification using the same formulation. "Certification" is not to be construed to mean that tests of any kind were necessarily conducted on samples of the specific

TABLE A1
DESIGNATION REFERENCE GUIDE

AWS Composition Designation[a]	UNS Number	Proposed ISO Designation[b]	AWS Classification Number[c]
1100	A91100	EA1100	E1100
3003	A93003	EA3003	E3003
4043	A94043	EA4043	E4043

NOTES:
a. AWS chemical composition designation is that of the core wire and is the same as the Aluminum Association designation number.
b. The proposed ISO designation number (IIW doc. XII-1232-91) contains the last four digits of the UNS number for wrought alloys, preceded by "EA," "E" to signify a covered electrode and "A" to signify an aluminum base alloy.
c. The AWS classification number is the AWS chemical composition designation preceded by an "E" to signify an electrode which carries the electrical current.

material shipped. Tests on such material may or may not have been conducted. The basis for the certification required by the specification is the classification test of "representative material" cited above, and the "Manufacturer's Quality Assurance Program" in ANSI/AWS A5.01.

A5. Ventilation During Welding

A5.1 Five major factors govern the quantity of fumes in the atmosphere to which welders and welding operators are exposed during welding:

(a) Dimensions of the space in which welding is done (with special regard to the height of the ceiling)

(b) Number of welders and welding operators working in that space

(c) Rate of evolution of fumes, gases, or dust, according to the materials and processes used

(d) The proximity of the welders or welding operators to the fumes as the fumes issue from the welding zone, and to the gases and dusts in the space in which they are working

(e) The ventilation provided to the space in which the welding is done.

A5.2 American National Standard ANSI Z49.1, *Safety in Welding, Cutting, and Allied Processes* (published by the American Welding Society), discusses the ventilation that is required during welding and should be referred to for details. Attention is drawn particularly to the Section of that document on Health Protection and Ventilation.

A6. Welding Considerations

A6.1 Welding aluminum by the shielded metal arc process is a well established practice. However, development of the gas shielded arc welding processes and the many advantages these processes offer has caused a shift away from the use of covered electrodes. When shielded metal arc welding, a flux-covered electrode is held in the standard electrode holder, and welding is done with direct current, electrode positive (DCEP). Important factors to be considered when welding aluminum with covered electrodes are moisture content of the electrode covering, and cleanliness of the electrode and base metal. Preheat is usually required to obtain good fusion and to improve soundness of the weld. Residual flux removal between passes is required to provide improved arc stability and weld fusion. Complete removal of the residual flux after welding is necessary to avoid corrosive attack in service.

A6.2 The presence of moisture in the electrode covering is a major cause of weld porosity. Dirt, grease, or other contamination of the electrode can also contribute to porosity. The absorption of moisture by the covering can be quite rapid, and the covering can deteriorate after only a few hours exposure to a humid atmosphere. For this reason, the electrodes should be stored in a dry, clean location. Electrodes taken from previously opened packages or those exposed to moisture should be "conditioned" by holding them at 350° to 400°F [175° to 200°C] for an hour before welding. After conditioning, they should be stored in a heated cabinet at 150° to 200°F [65° to 95°C] until used.

A6.3 The minimum base metal thickness recommended for shielded metal arc welding of aluminum

is 1/8 in. [3.2 mm]. For thicknesses less than 1/4 in. [6.4 mm], no edge preparation other than a relatively smooth, square cut is required. Material over 1/4 in. [6.4 mm] should be beveled to a single-V-groove with a 60 to 90-degree included angle. On very thick material, U-grooves may be used. Depending upon base metal gauge, root-face thicknesses range between 1/16 and 1/4 in. [1.6 and 6.4 mm]. A root opening of 1/32 to 1/16 in. [0.8 to 1.6 mm] is desirable for all groove welds.

A6.4 Because of the high thermal conductivity of aluminum, preheating to 250° to 400°F [120° to 200°C] is nearly always necessary on thick material to maintain the weld pool and obtain proper fusion. Preheating will also help to avoid porosity due to too rapid cooling of the weld pool at the start of the weld. On complex assemblies, preheating is useful in avoiding distortion. Preheating may be done by torch using oxygen and acetylene or other suitable fuel gas, or by electrical resistance heating. Mechanical properties of 6XXX series aluminum-alloy weldments can be reduced significantly if the higher preheating temperatures, 350°F [175°C] or higher, are applied.

A6.5 Single-pass SMA welds should be made whenever possible. However, where thicker plates require multiple passes, thorough cleaning between passes is essential for optimum results. After the completion of any welding, the weld and work should be thoroughly cleaned of residual flux. The major portion of the residual flux can be removed by mechanical means, such as a rotary wire brush, slag hammer, or peening hammer, and the rest by steaming or a hot-water rinse. The test for complete removal of residual flux is to swab a solution of five-percent silver nitrate on the weld areas. Foaming will occur if residual flux is present.

A6.6 Interruption of the arc when shielded metal arc welding aluminum can cause the formation of a fused flux coating over the end of the electrode. Reestablishing a satisfactory arc is impossible unless this formation is removed.

A7. Description and Intended Use of Electrodes

7.1 Electrodes of the E1100 classification produce weld metal of high ductility, good electrical conductivity, and a minimum tensile strength of 12 000 psi (80 MPa). E1100 electrodes are used to weld 1100, 1350(EC), and other commercially pure aluminum alloys.

A7.2 Electrodes of the E3003 classification produce weld metal of high ductility and a minimum tensile strength of 14 000 psi [95 MPa]. E3003 electrodes are used to weld aluminum alloys 1100 and 3003.

A7.3 The E4043 classification contains approximately five-percent silicon, which provides superior fluidity at welding temperatures, and for this reason is preferred for general purpose welding. The E4043 classification produces weld metal with fair ductility and a minimum tensile strength of 14 000 psi [95 MPa]. E4043 electrodes can be used to weld the 6XXX series aluminum alloys, the 5XXX series aluminum alloys (up to 2.5-percent Mg content), and aluminum-silicon casting alloys, as well as aluminum base metals 1100, 1350(EC), and 3003.

A7.4 For many aluminum applications, corrosion resistance of the weld is of prime importance. In such cases, it is advantageous to choose an electrode with a composition as close as practical to that of the base metal. For this use, covered electrodes for base metals other than 1100 and 3003 usually are not stocked and must be specially ordered. For applications where corrosion resistance is important, it may be advantageous to use one of the gas shielded arc welding processes for which a wider range of filler metal compositions is available.

A8. Special Tests

It is recognized that supplementary tests may be required for certain applications. In such cases, tests to determine specific properties such as corrosion resistance, electrical conductivity, mechanical properties at elevated or cryogenic temperatures, and suitability for welding different combinations of aluminum base alloys may be required.

A9. Chemical Analysis

The accepted and most widely used method for chemical analysis is found in ASTM E 227, *Optical Emission Spectrometric Analysis of Aluminum and Aluminum Alloy by the Point-to-Plane Technique*. This method analyzes a bulk sample and all elements simultaneously. The ASTM E 34, *Test Method for Chemical Analysis of Aluminum and Aluminum Alloy*, prescribes individual test methods for which each element is tested. The ASTM E 34 test methods are used as a referee method if a dispute arises concerning a specific element analysis.

A10. General Safety Considerations

A10.1 Burn Protection. Molten metal, sparks, slag, and hot work surfaces are produced by welding, cutting, and allied processes. These can cause burns if precautionary measures are not used. Workers should wear protective clothing made of fire-resistant material. Pant cuffs, open pockets, or other places on clothing that can catch and retain molten metal or sparks should not be worn. High-top shoes or leather leggings and fire-resistant gloves should be worn. Pant legs should be worn over the outside of high-top shoes. Helmets or hand shields that provide protection for the face, neck, and ears, and a head covering to protect the head should be used. In addition, appropriate eye protection should be used.

When welding overhead or in confined spaces, ear plugs to prevent weld spatter from entering the ear canal should be worn. Goggles or equivalent should also be worn to protect eyes. Clothing should be kept free of grease and oil. Combustible materials should not be carried in pockets. If any combustible substance has been spilled on clothing, a change to clean, fire-resistant clothing should be made before working with open arcs or flame. Aprons, cape-sleeves, leggings, and shoulder covers with bibs designed for welding service should be used.

Where welding or cutting of unusually thick base metal is involved, sheet metal shields should be used for extra protection. Mechanization of highly hazardous processes or jobs should be considered. Other personnel in the work area should be protected by the use of noncombustible screens or by the use of appropriate protection as described in the previous paragraph. Before leaving a work area, hot work pieces should be marked to alert other persons of this hazard. No attempt should be made to repair or disconnect electrical equipment when it is under load. Disconnection under load produces arcing of the contacts and may cause burns or shock, or both. *(Note: Burns can be caused by touching hot equipment such as electrode holders, tips, and nozzles. Therefore, insulated gloves should be worn when these items are handled, unless an adequate cooling period has been allowed before touching.)*

The following sources are for more detailed information on personal protection:

(a) ANSI Z49.1, *Safety in Welding, Cutting, and Allied Processes*, published by the American Welding Society, 550 N.W. LeJeune Road, Miami, FL 33126.

(b) Code of Federal Regulations, Title 29 Labor, Chapter XVII, Part 1910, OSHA General Industry Standards available from the U.S. Government Printing Office, Washington, DC 20402.

(c) ANSI/ASC Z87.1, *Practice for Occupational and Educational Eye and Face Protection*, American National Standards Institute, 11 West 42nd Street, New York, NY 10036-8002.

(d) ANSI Z41, *American National Standard for Personal Protection — Protective Footwear*, American National Standards Institute, 11 West 42nd Street, New York, NY 10036-8002.

A10.2 Electrical Hazards. Electric shock can kill. However, it can be avoided. Live electrical parts should not be touched. The manufacturer's instructions and recommended safe practices should be read and understood. Faulty installation, improper grounding, and incorrect operation and maintenance of electrical equipment are all sources of danger.

All electrical equipment and the workpieces should be grounded. The workpiece lead is not a ground lead. It is used only to complete the welding circuit. A separate connection is required to ground the workpiece. The workpiece should not be mistaken for a ground connection.

The correct cable size should be used, since sustained overloading will cause cable failure and result in possible electrical shock or fire hazard. All electrical connections should be tight, clean, and dry. Poor connections can overheat and even melt. Further, they can produce dangerous arcs and sparks. Water, grease, or dirt should not be allowed to accumulate on plugs, sockets, or electrical units. Moisture can conduct electricity. To prevent shock, the work area, equipment, and clothing should be kept dry at all times. Welders should wear dry gloves and rubber soled shoes, or stand on a dry board or insulated platform. Cables and connections should be kept in good condition. Improper or worn electrical connections may create conditions that could cause electrical shock or short circuits. Worn, damaged, or bare cables should not be used. Open-circuit voltage should be avoided. When several welders are working with arcs of different polarities, or when a number of alternating-current machines are being used, the open-circuit voltages can be additive. The added voltages increase the severity of the shock hazard.

In case of electric shock, the power should be turned off. If the rescuer must resort to pulling the victim from the live contact, nonconducting materials should be used. If the victim is not breathing, cardiopulmonary resuscitation (CPR) should be administered as soon as contact with the electrical source is broken. A physician should be called and CPR continued until breathing has been restored, or until a physician has arrived. Electrical burns are treated as thermal burns; that is, clean, cold (iced) compresses should be applied. Con-

tamination should be avoided; the area should be covered with a clean, dry dressing; and the patient should be transported to medical assistance.

Recognized safety standards such as ANSI Z49.1, *Safety in Welding, Cutting, and Allied Processes*; the *National Electrical Code*; and NFPA No. 70, available from National Fire Protection Association, 1 Batterymarch Park, Quincy, MA 02269, should be followed.

A10.3 Fumes and Gases. Many welding, cutting, and allied processes produce fumes and gases which may be harmful to health. Fumes are solid particles which originate from welding filler metals and fluxes, the base metal, and any coatings present on the base metal. Gases are produced during the welding process or may be produced by the effects of process radiation on the surrounding environment. Management, personnel and welders alike should be aware of the effects of these fumes and gases. The amount and composition of these fumes and gases depend upon the composition of the filler metal and base metal, welding process, flux, current level, arc length, and other factors. Fluxes, used for oxyfuel gas welding of aluminum alloys, are composed primarily of chlorides plus small fluoride additions. The coatings used in covered electrodes of the types shown in this specification A5.3/A5.3M contain both chlorides and fluorides.

The possible effects of overexposure range from irritation of eyes, skin, and respiratory system to more severe complications. Effects may occur immediately or at some later time. Fumes can cause symptoms such as nausea, headaches, dizziness, and metal fume fever. The possibility of more serious health effects exists when especially toxic materials are involved. In confined spaces, the fumes might displace breathing air and cause asphyxiation. One's head should always be kept out of the fumes. Sufficient ventilation, exhaust at the arc or flame, or both, should be used to keep fumes and gases from your breathing zone and the general area.

In some cases, natural air movement will provide enough ventilation. Where ventilation may be questionable, air sampling should be used to determine if corrective measures should be applied.

All aluminum electrodes possess a compositional control of 0.0008 percent maximum beryllium content. This provides a check by the manufacturer that the filler metal is essentially free of this element and thus avoids the presence of concentrations of this highly toxic metallic particulate during the filler metal transfer across the arc. Since the electrode core wire is fabricated as drawn, wrought aluminum wire, the same beryllium control has been applied to all filler metals covered by this ANSI/AWS A5.3/A5.3M specification. Thus all electrodes possess a 0.0008 percent beryllium maximum limit.

More detailed information on fumes and gases produced by the various welding processes may be found in the following:

(a) The permissible exposure limits required by OSHA can be found in CFR Title 29, Chapter XVII Part 1910. The OSHA *General Industry Standards* are available from the Superintendent of Documents, U.S. Government Printing Office, Washington, DC 20402.

(b) The recommended threshold limit values for these fumes and gases may be found in *Threshold Limit Values for Chemical Substances and Physical Agents in the Workroom Environment*, published by the American Conference of Governmental Industrial Hygienists (ACGIH), 1330 Kemper Meadow Drive, Suite 600, Cincinnati, OH 45240-1643.

(c) The results of an AWS-funded study are available in a report entitled, *Fumes and Gases in the Welding Environment*, available from the American Welding Society, 550 N.W. LeJeune Road, Miami, FL 33126.

A10.4 Radiation. Welding, cutting, and allied operations may produce radiant energy (radiation) harmful to health. One should become acquainted with the effects of this radiant energy.

Radiant energy may be ionizing (such as x-rays), or nonionizing (such as ultraviolet, visible light, or infrared). Radiation can produce a variety of effects such as skin burns and eye damage, depending on the radiant energy's wavelength and intensity, if excessive exposure occurs.

A10.4.1 Ionizing Radiation. Ionizing radiation is produced by the electron beam welding process. It is ordinarily controlled within acceptance limits by use of suitable shielding enclosing the welding area.

A10.4.2 Nonionizing Radiation. The intensity and wavelengths of nonionizing radiant energy produced depend on many factors, such as the process, welding parameters, electrode and base metal composition, fluxes, and any coating or plating on the base metal. Some processes such as resistance welding and cold pressure welding ordinarily produce negligible quantities of radiant energy. However, most arc welding and cutting processes (except submerged arc when used properly), laser beam welding and torch welding, cutting, brazing, or soldering can produce quantities of nonionizing radiation such that precautionary measures are necessary.

Protection from possible harmful effects caused by nonionizing radiant energy from welding include the following measures:

(a) One should not look at welding arcs except through welding filter plates which meet the requirements of ANSI/ASC Z87.1, *Practice for Occupational and Education Eye and Face Protection*, published by American National Standards Institute, 11 West 42nd Street, New York, NY 10036-8002. It should be noted that transparent welding curtains are not intended as welding filter plates, but rather are intended to protect passersby from incidental exposure.

(b) Exposed skin should be protected with adequate gloves and clothing as specified in ANSI Z49.1, *Safety in Welding, Cutting, and Allied Processes*, published by the American Welding Society, 550 N.W. LeJeune Road, Miami, FL 33126.

(c) Reflections from welding arcs should be avoided, and all personnel should be protected from intense reflections. *(Note: Paints using pigments of substantially zinc oxide or titanium dioxide have a lower reflectance for ultraviolet radiation.)*

(d) Screens, curtains, or adequate distance from aisles, walkways, etc., should be used to avoid exposing passersby to welding operations.

(e) Safety glasses with UV-protective side shields have been shown to provide some beneficial protection from ultraviolet radiation produced by welding arcs.

A10.4.3 Ionizing radiation information sources include:

(a) AWS F2.1-78, *Recommended Safe Practices for Electron Beam Welding and Cutting*, available from the American Welding Society, 550 N.W. LeJeune Road, Miami, FL 33126.

(b) Manufacturer's product information literature.

A10.4.4 Nonionizing radiation information sources include:

(a) Hinrichs, J.F., Project Committee on Radiation-Summary Report. *Welding Journal*, January 1978.

(b) Nonionizing Radiation Protection Special Study No. 42-0053-77, *Evaluation of the Potential Hazards from Actinic Ultraviolet Radiation Generated by Electric Welding and Cutting Arcs*, available from the National Technical Information Service, Springfield, VA 22161, ADA-033768.

(c) Nonionizing Radiation Protection Special Study No. 42-0312-77, *Evaluation of the Potential Retina Hazards from Optical Radiation Generated by Electric Welding and Cutting Arcs*, available from the National Technical Information Service, Springfield, VA 22161, ADA-043023.

(d) Moss, C. E., and Murray, W. E. "Optical Radiation Levels Produced in Gas Welding, Torch Brazing, and Oxygen Cutting." *Welding Journal*, September 1979.

(e) "Optical Radiation Levels Produced by Air-Carbon Arc Cutting Processes." *Welding Journal*, March 1980.

(f) ANSI/ASC Z136.1, *Safe Use of Lasers*, published by American National Standards Institute, 11 West 42nd Street, New York, NY 10036-8002.

(g) ANSI Z49.1, *Safety in Welding, Cutting, and Allied Processes*, published by the American Welding Society, 550 N.W. LeJeune Road, Miami, FL 33126.

(h) ANSI/ASC Z87.1, *Practice for Occupational and Educational Eye and Face Protection*, published by American National Standards Institute, 11 West 42nd Street, New York, NY 10036-8002.

(i) Moss, C. E. "Optical Radiation Transmission Levels through Transparent Welding Curtains." *Welding Journal*, March 1979.

SPECIFICATION FOR STAINLESS STEEL ELECTRODES FOR SHIELDED METAL ARC WELDING

SFA-5.4

(Identical with AWS Specification A5.4-92)

1. Scope

This specification prescribes requirements for the classification of covered stainless steel electrodes for shielded metal arc welding.[1]

Chromium content of weld metal deposited by these electrodes is not less than 10.5 percent and the iron content exceeds that of any other element. For purposes of classification, the iron content shall be derived as the balance element when all other elements are considered to be at their minimum specified values.[2]

Note: No attempt has been made to classify all grades of filler metals within the limits of the above scope; only the more commonly used have been included.

PART A — GENERAL REQUIREMENTS

2. Classification

2.1 The welding electrodes covered by this specification are classified according to the following:

(1) Chemical composition of undiluted weld metal (Table 1)

(2) Current and position of welding (Table 2)

2.2 Materials classified under one classification may be classified under any other classification of this specification provided they meet all the requirements for those classifications, except that a material may not be classified under more than one of the following EXXX-15, EXXX-16, EXXX-17, EXXX-25, or EXXX-26 designations.

Note: The test requirements of this specification establish minimum quality levels which will assure suitability of the electrodes for the usual applications. The guide appended to this specification describes the more common applications and suggests testing procedures for those applications which warrant tests that are beyond those included in this specification.

3. Acceptance

Acceptance[3] of the material shall be in accordance with the provisions of ANSI/AWS A5.01, *Filler Metal Procurement Guidelines.*[4]

4. Certification

By affixing the AWS specification and classification designations to the packaging, or the classification to the product, the manufacturer certifies that the product meets the requirements of this specification.[5]

5. Units of Measure and Rounding-Off Procedure

5.1 U.S. customary units are the standard units of measure in this specification. The SI units are given

[1] Due to possible differences in composition, core wire from a covered electrode should not be used as bare filler metal.

[2] This revision includes classifications for E502-XX, E505-XX and E7Cr-XX welding electrodes. These classifications also will be included in the next revision of ANSI/AWS A5.5, Specification for Low Alloy Steel Electrodes for Shielded Metal Arc Welding. They will be deleted in the first revision of this document following publication of the pending revision of the A5.5 specification.

[3] See A3, Acceptance (in the Appendix) for further information on acceptance, testing of material shipped, and ANSI/AWS A5.01, Filler Metal Procurement Guidelines.

[4] AWS standards can be obtained from the American Welding Society, 550 N.W. LeJeune Road, P.O. Box 351040, Miami, Florida 33135.

[5] See A4, Certification (in the Appendix) for further information concerning certification and the test called for to meet this requirement.

TABLE 1
CHEMICAL COMPOSITION REQUIREMENTS FOR UNDILUTED WELD METAL

AWS Classification[c]	UNS Number[d]	Weight Percent[a,b]										
		C	Cr	Ni	Mo	Cb (Nb) plus Ta	Mn	Si	P	S	N	Cu
E209-XX[e]	W32210	0.06	20.5–24.0	9.5–12.0	1.5–3.0	—	4.0–7.0	0.90	0.04	0.03	0.10–0.30	0.75
E219-XX	W32310	0.06	19.0–21.5	5.5–7.0	0.75	—	8.0–10.0	1.00	0.04	0.03	0.10–0.30	0.75
E240-XX	W32410	0.06	17.0–19.0	4.0–6.0	0.75	—	10.5–13.5	1.00	0.04	0.03	0.10–0.30	0.75
E307-XX	W30710	0.04–0.14	18.0–21.5	9.0–10.7	0.5–1.5	—	3.30–4.75	0.90	0.04	0.03	—	0.75
E308-XX	W30810	0.08	18.0–21.0	9.0–11.0	0.75	—	0.5–2.5	0.90	0.04	0.03	—	0.75
E308H-XX	W30810	0.04–0.08	18.0–21.0	9.0–11.0	0.75	—	0.5–2.5	0.90	0.04	0.03	—	0.75
E308L-XX	W30813	0.04	18.0–21.0	9.0–11.0	0.75	—	0.5–2.5	0.90	0.04	0.03	—	0.75
E308Mo-XX	W30820	0.08	18.0–21.0	9.0–12.0	2.0–3.0	—	0.5–2.5	0.90	0.04	0.03	—	0.75
E308MoL-XX	W30823	0.04	18.0–21.0	9.0–12.0	2.0–3.0	—	0.5–2.5	0.90	0.04	0.03	—	0.75
E309-XX	W30910	0.15	22.0–25.0	12.0–14.0	0.75	—	0.5–2.5	0.90	0.04	0.03	—	0.75
E309L-XX	W30913	0.04	22.0–25.0	12.0–14.0	0.75	—	0.5–2.5	0.90	0.04	0.03	—	0.75
E309Cb-XX	W30917	0.12	22.0–25.0	12.0–14.0	0.75	0.70–1.00	0.5–2.5	0.90	0.04	0.03	—	0.75
E309Mo-XX	W30920	0.12	22.0–25.0	12.0–14.0	2.0–3.0	—	0.5–2.5	0.90	0.04	0.03	—	0.75
E309MoL-XX	W30923	0.04	22.0–25.0	12.0–14.0	2.0–3.0	—	0.5–2.5	0.90	0.04	0.03	—	0.75
E310-XX	W31010	0.08–0.20	25.0–28.0	20.0–22.5	0.75	—	1.0–2.5	0.75	0.03	0.03	—	0.75
E310H-XX	W31015	0.35–0.45	25.0–28.0	20.0–22.5	0.75	—	1.0–2.5	0.75	0.03	0.03	—	0.75
E310Cb-XX	W31017	0.12	25.0–28.0	20.0–22.0	0.75	0.70–1.00	1.0–2.5	0.75	0.03	0.03	—	0.75
E310Mo-XX	W31020	0.12	25.0–28.0	20.0–22.0	2.0–3.0	—	1.0–2.5	0.75	0.03	0.03	—	0.75
E312-XX	W31310	0.15	28.0–32.0	8.0–10.5	0.75	—	0.5–2.5	0.90	0.04	0.03	—	0.75
E316-XX	W31610	0.08	17.0–20.0	11.0–14.0	2.0–3.0	—	0.5–2.5	0.90	0.04	0.03	—	0.75
E316H-XX	W31610	0.04–0.08	17.0–20.0	11.0–14.0	2.0–3.0	—	0.5–2.5	0.90	0.04	0.03	—	0.75
E316L-XX	W31613	0.04	17.0–20.0	11.0–14.0	2.0–3.0	—	0.5–2.5	0.90	0.04	0.03	—	0.75
E317-XX	W31710	0.08	18.0–21.0	12.0–14.0	3.0–4.0	—	0.5–2.5	0.90	0.04	0.03	—	0.75
E317L-XX	W31713	0.04	18.0–21.0	12.0–14.0	3.0–4.0	—	0.5–2.5	0.90	0.04	0.03	—	0.75
E318-XX	W31910	0.08	17.0–20.0	11.0–14.0	2.0–3.0	6 ‡ C, min to 1.00 max	0.5–2.5	0.90	0.04	0.03	—	0.75
E320-XX	W88021	0.07	19.0–21.0	32.0–36.0	2.0–3.0	8 ‡ C, min to 1.00 max	0.5–2.5	0.60	0.04	0.03	—	3.0–4.0

(Continued)

TABLE 1 (CONT'D)
CHEMICAL COMPOSITION REQUIREMENTS FOR UNDILUTED WELD METAL

AWS Classification[c]	UNS Number[d]	Weight Percent[a,b]										
		C	Cr	Ni	Mo	Cb (Nb) plus Ta	Mn	Si	P	S	N	Cu
E320LR-XX	W88022	0.03	19.0–21.0	32.0–36.0	2.0–3.0	8 ‡ C, min to 0.40 max	1.50–2.50	0.30	0.020	0.015	—	3.0–4.0
E330-XX	W88331	0.18–0.25	14.0–17.0	33.0–37.0	0.75	—	1.0–2.5	0.90	0.04	0.03	—	0.75
E330H-XX	W88335	0.35–0.45	14.0–17.0	33.0–37.0	0.75	—	1.0–2.5	0.90	0.04	0.03	—	0.75
E347-XX	W34710	0.08	18.0–21.0	9.0–11.0	0.75	8 ‡ C, min to 1.00 max	0.5–2.5	0.90	0.04	0.03	—	0.75
E349-XX[e,f,g]	W34910	0.13	18.0–21.0	8.0–10.0	0.35–0.65	0.75–1.20	0.5–2.5	0.90	0.04	0.03	—	0.75
E383-XX	W88028	0.03	26.5–29.0	30.0–33.0	3.2–4.2	—	0.5–2.5	0.90	0.02	0.02	—	0.6–1.5
E385-XX	W88904	0.03	19.5–21.5	24.0–26.0	4.2–5.2	—	1.0–2.5	0.75	0.03	0.02	—	1.2–2.0
E410-XX	W41010	0.12	11.0–13.5	0.7	0.75	—	1.0	0.90	0.04	0.03	—	0.75
E410NiMo-XX	W41016	0.06	11.0–12.5	4.0–5.0	0.40–0.70	—	1.0	0.90	0.04	0.03	—	0.75
E430-XX	W43010	0.10	15.0–18.0	0.6	0.75	—	1.0	0.90	0.04	0.03	—	0.75
E502-XX[h]	W50210	0.10	4.0–6.0	0.4	0.45–0.65	—	1.0	0.90	0.04	0.03	—	0.75
E505-XX[h]	W50410	0.10	8.0–10.5	0.4	0.85–1.20	—	1.0	0.90	0.04	0.03	—	0.75
E630-XX	W37410	0.05	16.00–16.75	4.5–5.0	0.75	0.15–0.30	0.25–0.75	0.75	0.04	0.03	—	3.25–4.00
E16-8-2-XX	W36810	0.10	14.5–16.5	7.5–9.5	1.0–2.0	—	0.5–2.5	0.60	0.03	0.03	—	0.75
E7Cr-XX[h]	W50310	0.10	6.0–8.0	0.4	0.45–0.65	—	1.0	0.90	0.04	0.03	—	0.75
E2209-XX	W39209	0.04	21.5–23.5	8.5–10.5	2.5–3.5	—	0.5–2.0	0.90	0.04	0.03	0.08–0.20	0.75
E2553-XX	W39553	0.06	24.0–27.0	6.5–8.5	2.9–3.9	—	0.5–1.5	1.0	0.04	0.03	0.10–0.25	1.5–2.5

NOTES
a. Analysis shall be made for the elements for which specific values are shown in the table. If, however, the presence of other elements is indicated in the course of routine analysis, further analysis shall be made to determine that the total of these other elements, except iron, is not present in excess of 0.50 percent.
b. Single values are maximum percentages.
c. Classification suffix -XX may be -15, -16, -17, -25, or -26. See Section A8 of the Appendix for an explanation.
d. SAE/ASTM Unified Number System for Metals and Alloys.
e. Vanadium shall be 0.10 to 0.30 percent.
f. Titanium shall be 0.15 percent max.
g. Tungsten shall be from 1.25 to 1.75 percent.
h. This grade also will appear in the next revision of AWS A5.5, *Specification for Low Alloy Steel Electrodes for Shielded Metal Arc Welding.* It will be deleted from A5.4 at the first revision of A5.4 following publication of the revised A5.5.

TABLE 2
TYPE OF WELDING CURRENT AND POSITION OF WELDING

AWS Classification[a]	Welding Current[b]	Welding Position[c]
EXXX(X)-15	dcep	All[d]
EXXX(X)-25	dcep	H, F
EXXX(X)-16	dcep or ac	All[d]
EXXX(X)-17	dcep or ac	All[d]
EXXX(X)-26	dcep or ac	H, F

NOTES
a. See Section A8, Classification as to Useability, for explanation of positions.
b. dcep = Direct current electrode positive (reverse polarity).
ac = Alternating current
c. The abbreviations H and F indicate welding positions (Figure 3) as follows:
F = Flat
H = Horizontal
d. Electrodes $^{3}/_{16}$ in. (4.8 mm) and larger are not recommended for welding all positions.

as equivalent values to the U.S. customary units. The standard sizes and dimensions in the two systems are not identical, and for this reason, conversion from a standard size or dimension in one system will not always coincide with a standard size or dimension in the other. Suitable conversions, encompassing standard sizes of both, can be made, however, if appropriate tolerances are applied in each case.

5.2 For purposes of determining conformance with this specification, an observed or calculated value shall be rounded to the nearest 1000 psi for tensile and yield strength, and to the "nearest unit" in the last right-hand place of figures used in expressing the limiting value for other quantities in accordance with the rounding-off method given in ASTM E29, *Practice for Using Significant Digits in Test Data to Determine Conformance with Specifications.*[6]

PART B — TESTS, PROCEDURES, AND REQUIREMENTS

6. Summary of Tests

The tests required for each classification are specified in Table 3. The purpose of these tests is to determine the chemical composition and mechanical properties of the weld metal and the usability of the electrodes. The base metal for the weld test assemblies, the welding and testing procedures to be employed, and the results required are given in Section 8, Weld Test Assemblies; Section 9, Chemical Analysis; Section 10, Tension Test; and Section 11, Fillet Weld Test.

7. Retest

If any test fails to meet its requirements, that test must be repeated twice. The results of both retests shall meet the requirement. Specimens for retest may be taken from the original test assembly or sample or from a new test assembly or sample. For chemical analysis, retest need be only for those specific elements that failed to meet their requirement.

8. Weld Test Assemblies

8.1 Three weld test assemblies are required:

(1) The weld pad in Fig. 1 for chemical analysis of the undiluted weld metal

(2) The groove weld in Fig. 2 for mechanical properties

(3) The fillet weld in Fig. 3 for usability of the electrode

Optionally, the sample for chemical analysis may be taken from the reduced section of the fractured tension specimen or from a corresponding location (or any location above it) in the weld metal of the groove weld in Fig. 2 or from the weld pad used for ferrite determination. In the case of dispute, the weld pad of Fig. 1 shall be the referee method.

8.2 Preparation of each weld test assembly shall be as prescribed in 8.3, 8.4 and 8.5. Base metal for each assembly shall conform to the following, or an equivalent:

8.2.1 The base metal shall be steel (carbon, alloy, stainless steel, or ingot iron) of 0.25 percent carbon, maximum for chemical analysis of all electrode classifications except E308L, E308MoL, E309L, E309MoL, E316L, E317L, E320LR, E383, E630, E385, and E2209. For chemical analysis of these low carbon classifications, the base metal shall be steel of 0.03 percent maximum carbon. Other steels having a carbon content of 0.25 percent maximum may be used with the further restrictions specified in 9.6.

8.2.2 For the all-weld-metal tension test, the steel to be used shall be of a matching type. Optionally, the steel may conform to one of the following specifications or their equivalents, providing two buttering layers of filler metal as shown in Fig. 2, are deposited in

[6] ASTM standards can be obtained from the American Society for Testing and Materials, 100 Barr Harbor Drive, West Conshohocken, PA 19428-2959.

TABLE 3
REQUIRED TESTS

Classification	Electrode Diameter		Type of Current[b]	Position of Welding[a]		
	in.	mm		Chemical Analysis[c]	All Weld Metal Tension Test[d]	Fillet Weld Test[d]
EXXX(X)-15	1/16	1.6	dcep	F	NR	NR
EXXX(X)-15	5/64	2.0	dcep	F	NR	NR
EXXX(X)-15	3/32	2.4	dcep	F	NR	NR
EXXX(X)-15	1/8	3.2	dcep	F	F	H, V, OH
EXXX(X)-15	5/32	4.0	dcep	F	F	H, V, OH
EXXX(X)-15	3/16	4.8	dcep	F	F	H
EXXX(X)-15	7/32	5.6	dcep	F	F	H
EXXX(X)-15	1/4	6.4	dcep	F	F	H
EXXX(X)-16, -17	1/16	1.6	ac & dcep	F	NR	NR
EXXX(X)-16, -17	5/64	2.0	ac & dcep	F	NR	NR
EXXX(X)-16, -17	3/32	2.4	ac & dcep	F	NR	NR
EXXX(X)-16, -17	1/8	3.2	ac & dcep	F	F	H, V, OH
EXXX(X)-16, -17	5/32	4.0	ac & dcep	F	F	H, V, OH
EXXX(X)-16, -17	3/16	4.8	ac & dcep	F	F	H
EXXX(X)-16, -17	7/32	5.6	ac & dcep	F	F	H
EXXX(X)-16, -17	1/4	6.4	ac & dcep	F	F	H
EXXX(X)-25	1/16	1.6	dcep	F	NR	NR
EXXX(X)-25	5/64	2.0	dcep	F	NR	NR
EXXX(X)-25	3/32	2.4	dcep	F	NR	NR
EXXX(X)-25	1/8	3.2	dcep	F	F	H
EXXX(X)-25	5/32	4.0	dcep	F	F	H
EXXX(X)-25	3/16	4.8	dcep	F	F	H
EXXX(X)-25	7/32	5.6	dcep	F	F	H
EXXX(X)-25	1/4	6.4	dcep	F	F	H
EXXX(X)-26	1/16	1.6	ac & dcep	F	NR	NR
EXXX(X)-26	5/64	2.0	ac & dcep	F	NR	NR
EXXX(X)-26	3/32	2.4	ac & dcep	F	NR	NR
EXXX(X)-26	1/8	3.2	ac & dcep	F	F	H
EXXX(X)-26	5/32	4.0	ac & dcep	F	F	H
EXXX(X)-26	3/16	4.8	ac & dcep	F	F	H
EXXX(X)-26	7/32	5.6	ac & dcep	F	F	H
EXXX(X)-26	1/4	6.4	ac & dcep	F	F	H

NOTES:

a. The abbreviations F, V, OH, and H indicate welding positions (Figure 3) as follows:
F = Flat
H = Horizontal
V = Vertical
OH = Overhead
The abbreviation NR indicates that the test is not required.

b. ac = alternating current; dcep = direct current, electrode positive (reverse polarity).

c. Where both alternating and direct current are specified, only one type of current need be used.

d. Where both alternating and direct current are specified, tests shall be made using both types of current.

SI Equivalents	
in.	mm
1/16	1.6
5/64	2.0
3/32	2.4
1/8	3.2
5/32	4.0
3/16	4.8
7/32	5.6
1/4	6.4
3/8	9.5
1/2	13
5/8	16
7/8	22
1-1/2	38
2	50
2-1/2	63

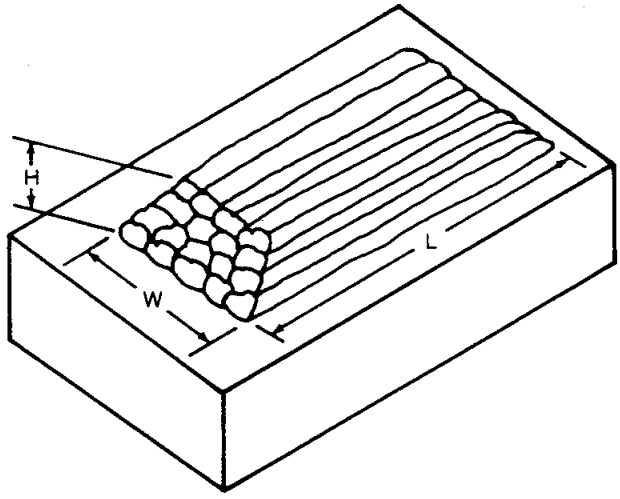

Electrode Size, in.	Weld Pad Size, Minimum, in. L	W	H	Minimum Distance of Sample from Surface of Base Plate, in.
1/16 5/64 3/32	1-1/2	1/2	1/2	3/8
1/8 5/32 3/16	2	1/2	5/8	1/2
7/32 1/4	2-1/2	1/2	3/4	5/8

FIG. 1 PAD FOR CHEMICAL ANALYSIS OF UNDILUTED WELD METAL

stringer beads using electrodes of the same classification as that being classified.

(1) ASTM specification A285, *Pressure Vessel Plates, Carbon Steel, Low- and Intermediate-Tensile Strength,* Grade C.

(2) ASTM specification A36, *Structural Steel.*

(3) ASTM specification A515, *Pressure Vessel Plates, Carbon Steel, for Intermediate- and Higher-Temperature Service,* Grade 70.

8.2.3 For the fillet weld test, the steel to be used shall conform to the following specifications:

(1) For E502, E505, E7Cr electrodes — ASTM specification A285, *Pressure Vessel Plates, Carbon Steel Low- and Intermediate-Tensile Strength,* Grade C

(2) For E400 Series electrodes — ASTM specification A240, *Heat-Resisting Chromium and Chromium-Nickel Stainless Steel Plate, Sheet and Strip for Fusion-Welded Unfired Pressure Vessels,* Type 410 or Type 430, A or B

(3) For all other classifications of electrodes — ASTM specification A240, *Heat-Resisting Chromium and Chromium-Nickel Stainless Steel Plate, Sheet and Strip for Fusion-Welded Unfired Pressure Vessels,* Type 304

8.3 Weld Pad

8.3.1 A weld pad shall be prepared as specified in Fig. 1 using base metal of any convenient size, of the type specified in 8.2. The surface of the base metal on which the filler metal is deposited shall be clean. The pad shall be welded in the flat position, using as short an arc length as practical and at a current as agreed upon between consumer and manufacturer. Multiple beads shall be used to obtain undiluted weld metal. The preheat temperature shall not be less than 60°F (16°C). After depositing each layer, the weld pad may be immersed in water (temperature unimportant) for approximately 30 seconds. The slag shall be removed after each pass. The completed pad shall be as shown

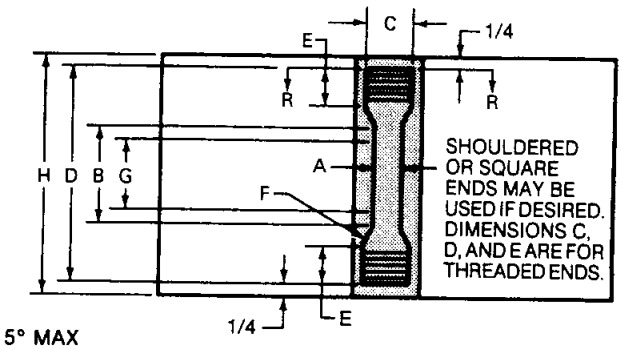

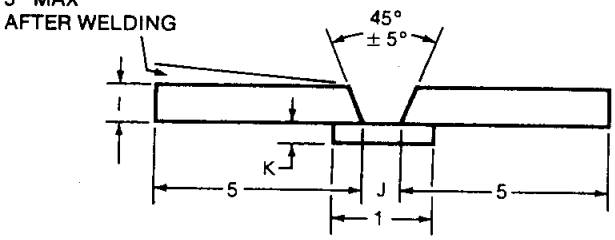

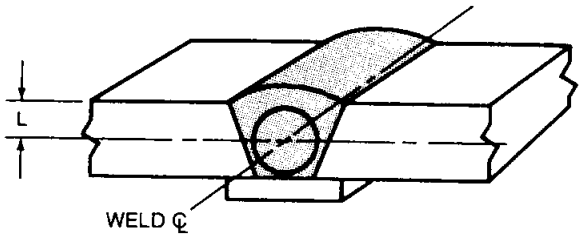

SECTION RR

NOTE: ALL DIMENSIONS EXCLUDING ANGLES ARE IN INCHES.

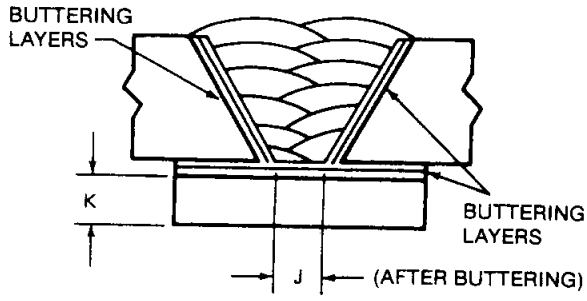

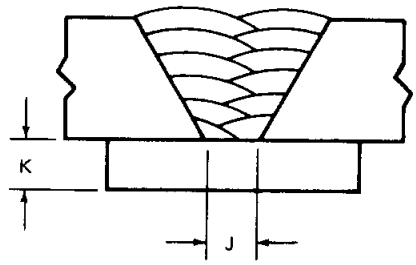

(FOR TEST PLATES OF MATCHING COMPOSITION)

Each layer or pass not to exceed 1/8 in. in thickness.
The first two layers may be deposited with one pass each.

SI Equivalents	
in.	mm
0.005	0.13
0.010	0.25
1/8 0.125	3.2
3/16 0.187	4.8
1/4 0.250	6.4
3/8 0.375	9.5
1/2 0.500	12.7
5/8 0.625	16
3/4 0.750	19.1
1 1.0	25.4
1-1/4	31.8
2	50.8
3	76
3-1/2	90
5	127
5-1/2	140

Electrode Diam., in.	Dimensions of Test Plate and Tension Test Specimens, in.											
	I	A	B	C	D, min	E, min	F, min	G	H, min	J	K	L
1/8	1/2	0.250 ± 0.005	1-1/4	3/8	3	5/8	0.18	1.000 ± 0.005	3-1/2	1/4	3/16	1/4
5/32 to 1/4 incl.	3/4	0.500 ± 0.010	2-1/4	3/4	5	1	3/8	2.000 ± 0.005	5-1/2	1/2	1/4	3/8

FIG. 2 GROOVE WELD TEST ASSEMBLY FOR TENSION TEST SPECIMEN

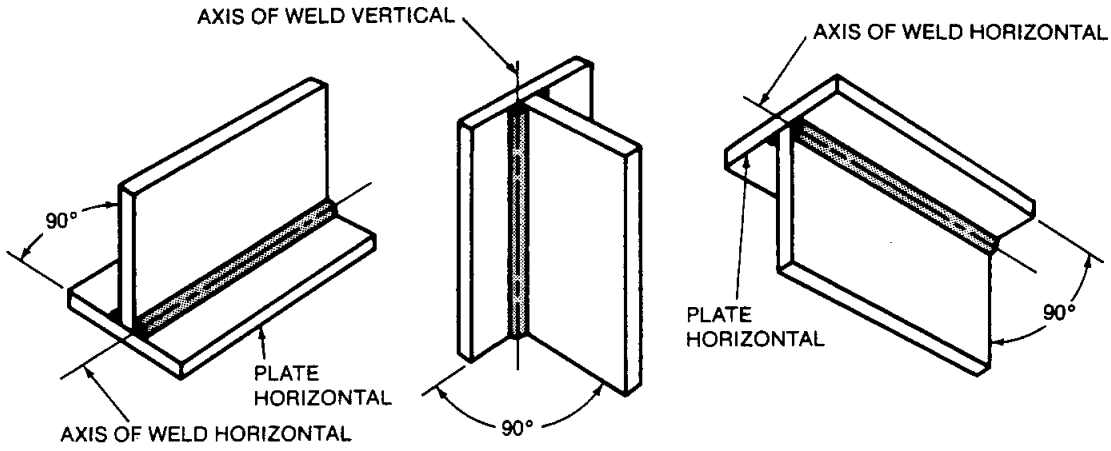

(a) HORIZONTAL FILLET WELDS (b) VERTICAL FILLET WELDS (c) OVERHEAD FILLET WELDS

(A) POSITIONS OF TEST PLATES FOR WELDING FILLET-WELD TEST SPECIMENS

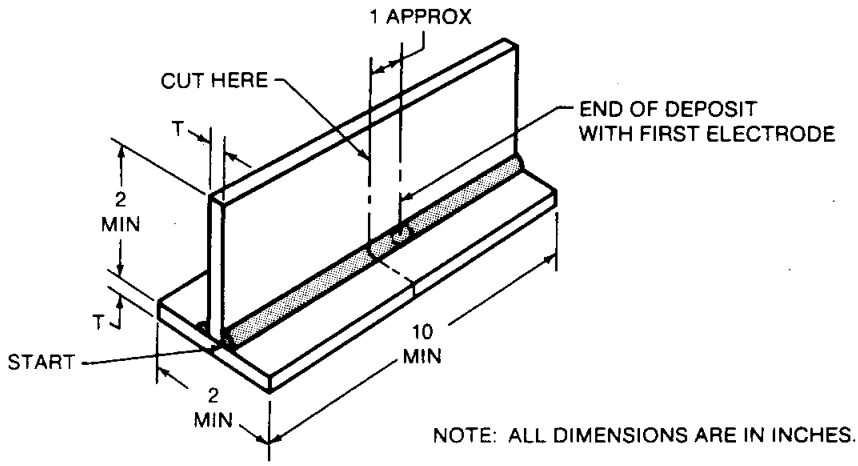

(B) PREPARATION OF FILLET-WELD TEST ASSEMBLY

Electrode Diameter Size, in.	Thickness of Plate T, in.	Position of Welding	Required Fillet Max., in.
1/8	1/4	V	1/4
		H and OH	3/16
1/8*	3/8 or 1/2	V	3/8
		H and OH	1/4
5/32	1/4 or 3/8	V	5/16
		H and OH	1/4
5/32*	1/2	V	1/2
		H and OH	5/16
3/16	3/8	H	5/16
1/4	3/8	H	3/8

*For EXXX-17 electrodes only

SI Equivalents*	
in.	mm
1/8	3.2
5/32	4.0
3/16	4.8
1/4	6.4
5/16	8.0
3/8	9.5
1	25
2	50
10	250

FIG. 3 FILLET WELD TEST ASSEMBLY

TABLE 4
WELDING CONDITIONS FOR PREPARATION OF THE GROOVE WELD

AWS Classification	Preheat and Interpass Temperature			
	Minimum		Maximum	
	°F	°C	°F	°C
E400 Series (except E410)	300	150	500	260
E500 Series	300	150	500	260
E7Cr	300	150	500	260
E410	400	204	600	315
All Others	60	16	300	150

in Fig. 1 for each size of the electrode. Testing of the assembly shall be as specified in Section 9, Chemical Analysis.

8.3.2 Where both alternating and direct current are specified, only one type of current need be used.

8.4 Groove Weld

8.4.1 A test assembly shall be prepared as specified in 8.4.2, 8.4.3, and Fig. 2, using base metal of the appropriate type specified in 8.2.

8.4.2 The plates shall be welded in the flat position, and they shall be preset or sufficiently restrained during welding to prevent warping more than 5 degrees. A test plate that has warped more than 5 degrees shall be discarded. Test assemblies shall not be straightened.

8.4.3 The test assembly shall be within the temperature ranges specified in Table 4 before starting each pass, including depositing of any buttering layer, as measured on the assembly at a distance of 1 in. (25 mm) from the weld at the mid-length of the test plate.

If, after any pass, the maximum temperature specified above is exceeded, plates shall be allowed to cool in air (do not cool in water) to a temperature within the range shown.

8.4.4 The assembly shall be tested in the as-welded or post weld heat-treated condition as specified in Table 5.

8.5 Fillet Weld

8.5.1 A test assembly shall be prepared and welded as shown in Fig. 3, using base metal of the appropriate type specified in 8.2. The welding position and conditions shall be as specified in the fillet weld column of Table 3 for the different electrode sizes and classifications. Testing of the assembly shall be as specified in Section 11, Fillet Weld Test.

8.5.2 In preparing the two plates forming the test assembly, the standing member (web) shall have one edge machined throughout its entire length so that when the web is set upon the base plate (flange), which shall be straight and smooth, there will be intimate contact along the entire length of the joint.

8.5.3 A single-pass fillet weld shall be deposited on one side of the joint. The first electrode shall be continuously consumed to within the maximum permissible stub length of 2 in. (50 mm). Additional electrodes, if necessary, shall then be used to complete the weld for the full length of the joint, consuming each electrode completely as stated above, insofar as permitted by the length of the assembly.

8.5.4 When welding in the vertical position, the welding shall progress upwards.

8.5.5 After completing the weld on the first side of the joint, the assembly shall be cooled to room temperature [but not less than 60°F (16°C)] by any convenient means before commencing to weld on the second side (see note).

Note: If water is used as the coolant, care should be taken that it has been thoroughly removed from the joint before beginning welding on the second side.

8.5.6 The fillet weld shall be deposited on the second side of the joint with the same procedure used for the fillet weld on the first side.

9. Chemical Analysis

9.1 The top surface of the weld pad described in 8.3 and shown in Fig. 1 shall be removed and discarded and a sample for analysis shall be obtained from the underlying metal by any appropriate mechanical means from the surface to be analyzed. The sample shall be free of slag.

9.2 Weld pads which are too hard for sample removal in the as-welded condition may be given an annealing heat treatment.

9.3 Alternatively, the sample taken from the reduced section of the fractured tension specimen or from the groove weld (see 8.1) may be prepared for analysis by any suitable mechanical means. A sample taken from the weld pad used for ferrite determination (A6.9.1 through A6.9.4) shall be taken after draw filing, and the height above the base plate for sample removal

TABLE 5
ALL-WELD-METAL MECHANICAL PROPERTY REQUIREMENTS

AWS Classification	Tensile Strength, min ksi	Tensile Strength, min MPa	Elongation min Percent	Heat Treatment
E209-XX	100	690	15	None
E219-XX	90	620	15	None
E240-XX	100	690	15	None
E307-XX	85	590	30	None
E308-XX	80	550	35	None
E308H-XX	80	550	35	None
E308L-XX	75	520	35	None
E308Mo-XX	80	550	35	None
E308MoL-XX	75	520	35	None
E309-XX	80	550	30	None
E309L-XX	75	520	30	None
E309Cb-XX	80	550	30	None
E309Mo-XX	80	550	30	None
E309MoL-XX	75	520	30	None
E310-XX	80	550	30	None
E310H-XX	90	620	10	None
E310Cb-XX	80	550	25	None
E310Mo-XX	80	550	30	None
E312-XX	95	660	22	None
E316-XX	75	520	30	None
E316H-XX	75	520	30	None
E316L-XX	70	490	30	None
E317-XX	80	550	30	None
E317L-XX	75	520	30	None
E318-XX	80	550	25	None
E320-XX	80	550	30	None
E320LR-XX	75	520	30	None
E330-XX	75	520	25	None
E330H-XX	90	620	10	None
E347-XX	75	520	30	None
E349-XX	100	690	25	None
E383-XX	75	520	30	None
E385-XX	75	520	30	None
E410-XX	75	450	20	a
E410NiMo-XX	110	760	15	c
E430-XX	65	450	20	d
E502-XX	60	420	20	b
E505-XX	60	420	20	b
E630-XX	135	930	7	e
E16-8-2-XX	80	550	35	None
E7Cr-XX	60	420	20	b
E2209-XX	100	690	20	None
E2553-XX	110	760	15	None

NOTES:

a. Heat to 1350 to 1400°F (730 to 760°C), hold for one hour, furnace cool at a rate of 100°F (60°C) per hour to 600°F (315°C) and air cool to ambient.

b. Heat to 1550 to 1600°F (840 to 870°C), hold for two hours, furnace cool at a rate not exceeding 100°F (55°C) per hour to 1100°F (595°C) and air cool to ambient.

c. Heat to 1100 to 1150°F (595 to 620°C), hold for one hour, and air cool to ambient.

d. Heat to 1400 to 1450°F (760 to 790°C), hold for two hours, furnace cool at a rate not exceeding 100°F (55°C) per hour to 1100°F (595°C) and air cool to ambient.

e. Heat to 1875 to 1925°F (1025 to 1050°C), hold for one hour, and air cool to ambient, and then precipitation harden at 1135 to 1165°F (610 to 630°C), hold for four hours, and air cool to ambient.

shall be consistent with the requirements of Fig. 1 for the standard weld pad.

9.4 The sample shall be analyzed by accepted analytical methods. In case of dispute, the referee method shall be ASTM Standard Methods E353, *Chemical Analysis of Stainless, Heat-Resisting, Maraging, and Other Similar Chromium-Nickel-Iron-Alloys.*

9.5 The results of the analysis shall meet the requirements of Table 1 for the classification of the electrode under test.

9.6 If steels other than those that have 0.03 percent maximum carbon are used for E630, E2209, and low carbon grade electrodes,[7] the sample shall come from material above the eighth layer.

10. Tension Test

10.1 One all-weld-metal tension test shall be machined from the groove weld described in 8.4 and shown in Fig. 2.

10.2 The specimen shall be tested in the manner described in the tension test section of ANSI/AWS B4.0, *Standard Methods for Mechanical Testing of Welds.*

10.3 The results of the tension test shall meet the requirements specified in Table 5.

11. Fillet Weld Test

11.1 The fillet weld test, when required in Table 3, shall be made in accordance with 8.5 and Fig. 3. The entire face of the completed fillet weld shall be examined visually. The weld shall be free from cracks or other open defects that would affect the strength of the weld. After the visual examination, a cross section shall be taken from the portion of the weld made with the first electrode and approximately 1 in. (25 mm) from the end of that weld bead, as shown in Fig. 3. The cross-sectional surface shall be polished and etched, and then examined as required in 11.2.

11.2 Scribe lines shall be placed on the prepared surface, as shown in Fig. 4, and the leg length and the convexity shall be determined to the nearest $1/64$ in. (0.4 mm) by actual measurement.

11.2.1 Both fillet welds shall have penetration to or beyond the junction of the edges of the plates.

11.2.2 Both legs of the fillet weld shall be equal in length within $1/16$ in. (1.6 mm).

11.2.3 Convexity of each fillet weld shall be within the limits prescribed by the graph shown in Fig. 4.

11.2.4 The fillet welds shall show no evidence of cracks.

11.2.5 The welds shall be reasonably free from undercutting, overlap, trapped slag, and porosity.

PART C — MANUFACTURE, IDENTIFICATION, AND PACKAGING

12. Method of Manufacture

The welding electrodes classified according to this specification may be manufactured by any method that will produce electrodes conforming to the requirements of this specification.

13. Standard Sizes and Lengths

13.1 Standard sizes (diameter of the core wire) and lengths of electrodes shall be as shown in Table 6.

13.2 The diameter of the core wire shall not vary more than ±0.002 in. (±0.05 mm) from the diameter specified. The length shall not vary more than $\pm 1/4$ in. (±6.4 mm) from that specified.

14. Core Wire and Covering

14.1 The core wire and covering shall be free of defects that would interfere with uniform deposition of the weld metal.

14.2 The core wire and the covering shall be concentric to the extent that the maximum core-plus-one-covering dimension does not exceed the minimum core-plus-one-covering dimension by more than the following:

(1) Seven percent of the mean dimension in sizes $3/32$ in. (2.4 mm) and smaller

(2) Five percent of the mean dimension in sizes $1/8$ in. (3.2 mm) and $5/32$ in. (4.0 mm)

(3) Four percent of the mean dimension in sizes $3/16$ in. (4.8 mm) and larger

The concentricity may be measured by any suitable means.

[7] Low carbon electrode grades are as follows: E308L, E308MoL, E309L, E309MoL, E316L, E317L, E320LR, E383, and E385.

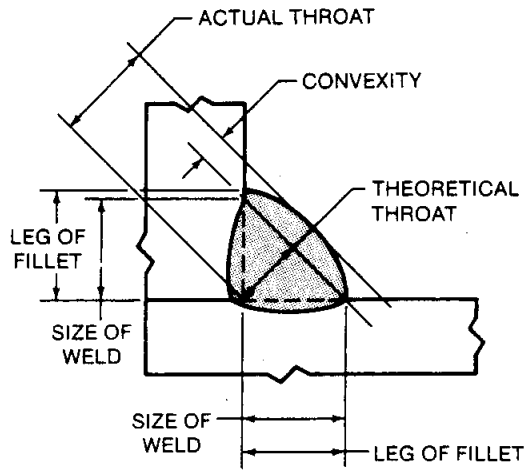

CONVEX FILLET

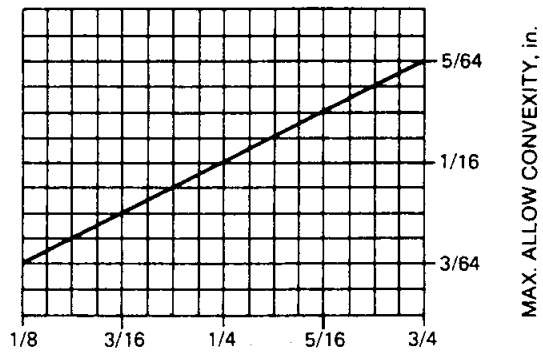

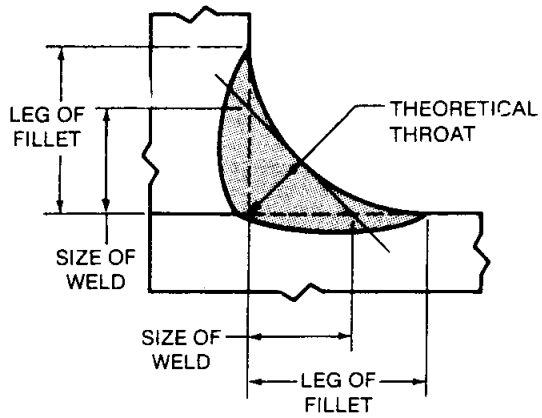

CONCAVE FILLET

SI Equivalents

in.	mm
3/64	1.2
1/16	1.6
5/64	2.0
3/32	2.4
1/8	3.2
3/16	4.8
1/4	6.4
5/16	8.0
3/8	9.5

Notes:

1. Size of fillet weld = leg length of largest inscribed isosceles right triangle.
2. Length of horizontal leg of fillet weld shall not vary more than 1/16 in. (1.6 mm) from length of vertical leg.
3. Fillet weld size, convexity, and leg lengths of fillet welds shall be determined by actual measurement (nearest 1/64 in. [0.5 mm]) on a section laid out with scribed lines shown.

FIG. 4 FILLET WELD TEST SPECIMEN

TABLE 6
STANDARD SIZES AND LENGTHS

Electrode Size (Diameter of Core Wire)[a]		Standard Lengths[b,c]	
in.	mm	in.	mm
1/16	1.6	9	230
5/64	2.0	9	230
3/32	2.4	9, 12, 14[d]	230, 305, 350[d]
1/8	3.2	14, 18[d]	350, 460[d]
5/32	4.0	14, 18[d]	350, 460[d]
3/16	4.8	14, 18[d]	350, 460[d]
7/32	5.6	14, 18	350, 460
1/4	6.4	14, 18	350, 460

NOTES
a. Tolerance on the diameter shall be ±0.002 in. (±0.05 mm).
b. Tolerance on length shall be ±1/4 in. (±6.4 mm).
c. Other sizes and lengths shall be as agreed upon between purchaser and supplier.
d. These lengths are intended only for the EXXX-25 and EXXX-26 types.

15. Exposed Core

15.1 The grip end of each 5/32 in. (4.0 mm) and smaller electrode shall be bare (free of covering) for a distance of not less than 1/2 in. (12 mm), nor more than 1 1/4 in. (30 mm) and for larger electrodes the bare end shall be not less than 3/4 in. (19.2 mm) nor more than 1 1/2 in. (38 mm) to provide for electrical contact with the holder.

15.2 The arc end of each electrode shall be sufficiently bare and the covering sufficiently tapered to permit easy striking of the arc. The length of the bare portion (measured from the end of the core wire to the location where the full cross section of the covering is obtained) shall not exceed 1/8 in. (3 mm) or the diameter of the core wire, whichever is less. Electrodes with chipped coverings near the arc end, baring the core wire no more than the lesser of 1/4 in. (6.4 mm) or twice the diameter of the core wire, meet the requirements of this specification, provided no chip uncovers more than 50 percent of the circumference of the core.

16. Electrode Identification

All electrodes shall be identified as follows:

16.1 At least one imprint of the electrode classification shall be applied to the electrode covering within 2 1/2 in. (65 mm) of the grip end of the electrode.

16.2 The numbers and letters of the imprint shall be of bold block type and of a size large enough to be legible.

16.3 The ink used for imprinting shall provide sufficient contrast with the electrode covering so that, in normal use, the numbers and letters are legible both before and after welding.

16.4 The prefix letter "E" in the electrode classification may be omitted from the imprint.

17. Packaging

17.1 Electrodes shall be suitably packaged to protect them from damage during shipment and storage under normal conditions.

17.2 Standard package weights shall be as agreed between purchaser and supplier.

18. Marking of Packages

18.1 The following product information (as a minimum) shall be legibly marked on the outside of each unit package:

(1) AWS specification and classification numbers (Year of issue may be excluded)
(2) Supplier's name and trade designation
(3) Standard size and net weight
(4) Lot, control, or heat number

18.2 The following precautionary information (as a minimum) shall be prominently displayed in legible print on all packages of electrodes:

WARNING:

Protect yourself and others. Read and understand this information. FUMES AND GASES can be dangerous to your health. ARC RAYS can injure eyes and burn skin. ELECTRIC SHOCK can kill.

- Before use read and understand the manufacturer's instructions, Material Safety Data Sheets (MSDS's), and your employer's safety practices.
- Keep your head out of the fumes.
- Use enough ventilation, exhaust at the arc, or both, to keep fumes and gases away from your breathing zone and the general area.
- Wear correct eye, ear, and body protection.
- Do not touch live electrical parts.

- See American National Standard Z49.1, *Safety in Welding and Cutting,* published by the American Welding Society, P.O. Box 351040, Miami, Florida 33135; *OSHA Safety and Health Standards,* 29 CFR 1910, available from the U.S. Government Printing Office, Washington, DC 20402.

DO NOT REMOVE THIS INFORMATION

Appendix
Guide to AWS Specification for Stainless Steel Electrodes for Shielded Metal Arc Welding

(This Appendix is not a part of ANSI/AWS A5.4-92, *Specification for Stainless Steel Electrodes for Shielded Metal Arc Welding*, but is included for information only.)

A1. Introduction

A1.1 This specification is intended to provide both the supplier and the purchaser of covered stainless steel welding electrodes with a means of product control and a basis of acceptance through mutually acceptable, sound, standard requirements.

A1.2 This guide has been prepared as an aid to prospective users of covered stainless steel welding electrodes included in the specification to determine the classification best suited for a particular application, with due consideration to the particular requirements for that application.

A2. Classification System

A2.1 The system of classification is similar to that used in other filler metal specifications. The letter "E" at the beginning of each number indicates an electrode. The first three digits designate the classification as to its composition. (Occasionally, a number of digits other than three is used and letters may follow the digits to indicate a specific composition.) The last two digits designate the classification as to usability with respect to position of welding and type of current as described in A8. The smaller sizes of EXXX(X)-15, EXXX(X)-16, or EXXX(X)-17 electrodes [up to and including $^5/_{32}$ in. (4.0 mm)] included in this specification are used in all welding positions.

A2.2 The mechanical tests measure strength and ductility, qualities which are often of lesser importance than the corrosion and heat resisting properties. These mechanical test requirements, however, provide an assurance of freedom from weld metal flaws, such as check cracks and serious dendritic segregations which, if present, may cause failure in service.

A2.3 It is recognized that for certain applications, supplementary tests may be required. In such cases, additional tests to determine specific properties, such as corrosion resistance, scale resistance, or strength at elevated temperatures may be required as agreed upon between supplier and purchaser.

A3. Acceptance

Acceptance of all welding materials classified under this specification is in accordance with ANSI/AWS A5.01, *Filler Metal Procurement Guidelines,* as the specification states. Any testing a purchaser requires of the supplier, for material shipped in accordance with this specification, must be clearly stated in the purchase order, according to the provisions of ANSI/AWS A5.01. In the absence of any such statement in the purchase order, the supplier may ship the material with whatever testing is normally conducted on material of that classification, as specified in Schedule F, Table 1, of ANSI/AWS A5.01. Testing in accordance with any other Schedule in that Table must be specifically required by the purchase order. In such cases, acceptance of the material shipped will be in accordance with those requirements.

A4. Certification

The act of placing the AWS specification and classification designations on the packaging enclosing the product, or the classification on the product itself, constitutes the supplier's (manufacturer's) certification

that the product meets all of the requirements of the specification.

The only testing requirement implicit in this certification is that the manufacturer has actually conducted the tests required by the specification on material that is representative of that being shipped and that that material met the requirements of the specification. Representative material, in this case, is any production run of that classification using the same formulation. "Certification" is not to be construed to mean that tests of any kind were necessarily conducted on samples of the specific material shipped. Tests on such material may or may not have been conducted. The basis for the certification required by the specification is the classification test of "representative material" cited above, and the "Manufacturer's Quality Assurance Program" in ANSI/AWS A5.01, *Filler Metal Procurement Guidelines.*

A5. Ventilation During Welding

A5.1 Five major factors govern the quantity of fumes in the atmosphere to which welders and welding operators are exposed during welding:

(1) Dimensions of the space in which welding is done (with special regard to the height of the ceiling)

(2) Number of welders and welding operators working in that space

(3) Rate of evolution of fumes, gases, or dust, according to the materials and processes used

(4) The proximity of the welders or welding operators to the fumes as they issue from the welding zone, and to the gases and dusts in the space in which they are working

(5) The ventilation provided to the space in which the welding is done

A5.2 American National Standard Z49.1, *Safety in Welding and Cutting* (published by the American Welding Society), discusses the ventilation that is required during welding and should be referred to for details. Attention is drawn particularly to the section of that document on Health Protection and Ventilation.

A6. Ferrite in Weld Deposits

A6.1 Ferrite is known to be very beneficial in reducing the tendency for cracking or fissuring in weld metals; however, it is not essential. Millions of pounds of fully austenitic weld metal have been used for years and provided satisfactory service performance. Generally, ferrite is helpful when the welds are restrained, the joints are large, and when cracks or fissures adversely affect service performance. Ferrite increases the weld strength level. Ferrite may have a detrimental effect on corrosion resistance in some environments. It also is generally regarded as detrimental to toughness in cryogenic service, and in high-temperature service where it can transform into the brittle sigma phase.

A6.2 Ferrite can be measured on a relative scale by means of various magnetic instruments. However, work by the Subcommittee for Welding of Stainless Steel of the High Alloys Committee of the Welding Research Council (WRC) established that the lack of a standard calibration procedure resulted in a very wide spread of readings on a given specimen when measured by different laboratories. A specimen averaging 5.0 percent ferrite based on the data collected from all the laboratories was measured as low as 3.5 percent by some and as high as 8.0 percent by others. At an average of 10 percent, the spread was 7.0 to 16.0 percent.

In order to substantially reduce this problem, the WRC Subcommittee published on July 1, 1972, *Calibration Procedure for Instruments to Measure the Delta Ferrite Content of Austenitic Stainless Steel Weld Metal.*[8] In 1974, the AWS extended this procedure and prepared AWS A4.2, *Standard Procedure for Calibrating Magnetic Instruments to Measure the Delta Ferrite Content of Austenitic Steel Weld Metal.* All instruments used to measure the ferrite content of AWS classified stainless electrode products are to be traceable to this AWS standard.

A6.3 The WRC Subcommittee also adopted the term *Ferrite Number* (FN) to be used in place of percent ferrite, to clearly indicate that the measuring instrument was calibrated to the WRC procedure. The Ferrite Number, up to 10 FN, is to be considered equal to the *percent ferrite* term previously used. It represents a good average of commercial U.S. and world practice on the percent ferrite. Through the use of standard calibration procedures, differences in readings due to instrument calibration are expected to be reduced to about ±5 percent, or at the most, ±10 percent of the measured ferrite value.

A6.4 In the opinion of the WRC Subcommittee, it has been impossible, to date, to accurately determine the true absolute ferrite content of weld metals.

A6.5 Even on undiluted pads, ferrite variations from pad to pad must be expected due to slight changes in welding and measuring variables. On a large group of pads from one heat or lot and using a standard pad

[8] Available from the Welding Research Council, Three Park Avenue, New York, NY 10016.

welding and preparation procedure, two sigma values indicate that 95 percent of the tests are expected to be within a range of approximately ±2.2 FN at about 8 FN. If different pad welding and preparation procedures are used, these variations will increase.

A6.6 Even larger variations may be encountered if the welding technique allows excessive nitrogen pickup, in which case the ferrite can be much lower than it should be. High nitrogen pickup can cause a typical 8 FN deposit to drop to 0 FN. A nitrogen pickup of 0.10 percent will typically decrease the FN by about 8.

A6.7 Plate materials tend to be balanced chemically to have an inherently lower ferrite content than matching weld metals. Weld metal diluted with plate metal will usually be somewhat lower in ferrite than the undiluted weld metal, though this does vary depending on the amount of dilution and the composition of the base metal.

A6.8 In the E300 series electrodes, many types such as E310, E320, E320LR, E330, E383 and E385 are fully austenitic. The E316 group can be made with little or no ferrite and generally is used in that form because it has better corrosion resistance in certain media. It also can be obtained in a higher ferrite form, usually over 4 FN, if desired. The remaining E300 series electrodes can be made in low ferrite versions, but commercial practice usually involves ferrite control above 4 FN. Because of chemistry limits covering these grades and various manufacturing limits, most lots will be under 10 FN and it is unlikely to go over 15 FN commercially. E16-8-2 generally is controlled at a low ferrite level, under 5 FN; E312, E2553, and E2209 generally are quite high in ferrite, usually over 20 FN.

A6.9 When it is desired to measure ferrite content, the following procedure is recommended:

A6.9.1 Weld pads as detailed in Fig. A1 are prepared as described in A6.9.2 through A6.9.4. The base plate must be Type 301, 302, or 304 conforming to ASTM Specification A167 or A240. Carbon steel may be used provided that the weld pad is built up to the minimum height specified in A6.9.2.

A6.9.2 The weld pad must be built up between two copper bars laid parallel on the base plate by depositing single weld bead layers, one on top of the other to a minimum height of $\frac{1}{2}$ in. (13 mm). The spacing between the copper bars for the size of the electrode being tested must be as specified in Fig. A1. An optional welding fixture is shown in Fig. A2. If carbon steel is used as the base plate, the weld pad must be built up to a minimum height of $\frac{5}{8}$ in. (16 mm).

A6.9.3 Typical welding currents used for the size of the electrode being tested are shown in Fig. A1. The arc length should be as short as practicable. The weld bead layers may be deposited with a weave, if necessary, to fill the space between the copper bars. The arc shall not be allowed to impinge on the copper bars. The welding direction should be alternated from pass to pass. The weld stops and starts must be located at the ends of the weld buildup. Each pass must be cleaned prior to depositing the next weld bead. The maximum interpass temperatures should be 200°F (95°C). Between passes, the weld pad may be cooled by quenching in water not sooner than 20 seconds after the completion of each pass. The last pass must be air cooled to below 800°F (430°C) prior to quenching in water.

A6.9.4 The completed weld pad must be draw filed to provide sufficient finished surface to make the required ferrite readings.

Draw filing must be performed with a 14 in. (360 mm) mill bastard file held on both sides of the weld with the long axis of the file perpendicular to the long axis of the weld. Files shall either be new or shall have been used only on austenitic stainless steel.

Filing must be accomplished by smooth draw filing strokes (one direction only) along the length of the weldwhile applying a firm downward pressure. Cross filing, i.e., filing in two different directions, shall not be permitted. The finished surface must be smooth with all traces of weld ripple removed and must be continuous in length where measurements are to be taken. The width of the prepared surface shall not be less than $\frac{1}{8}$ in. (3 mm).

A6.9.5 A total of six ferrite readings must be taken on the filed surface along the longitudinal axis of the weld pad with an instrument calibrated in accordance with the procedures specified in ANSI/AWS A4.2, *Standard Procedures for Calibrating Magnetic Instruments to Measure the Delta Ferrite Content of Austenitic and Duplex Austenitic-Ferritic Stainless Steel Weld Metal* (latest edition).

A6.9.6 The six readings obtained must be averaged to a single value for conversion to Ferrite Number.

A6.10 The ferrite content of welds may be calculated from the chemical composition of the weld deposit. This can be done from one of several constitution diagrams. These are the WRC-1988 Diagram (Fig. A3), the Espy Diagram (Fig. A4), and the DeLong Diagram (Fig. A5). There may be a wide range of results obtained from one diagram to another. The following paragraphs give some explanation of the differences

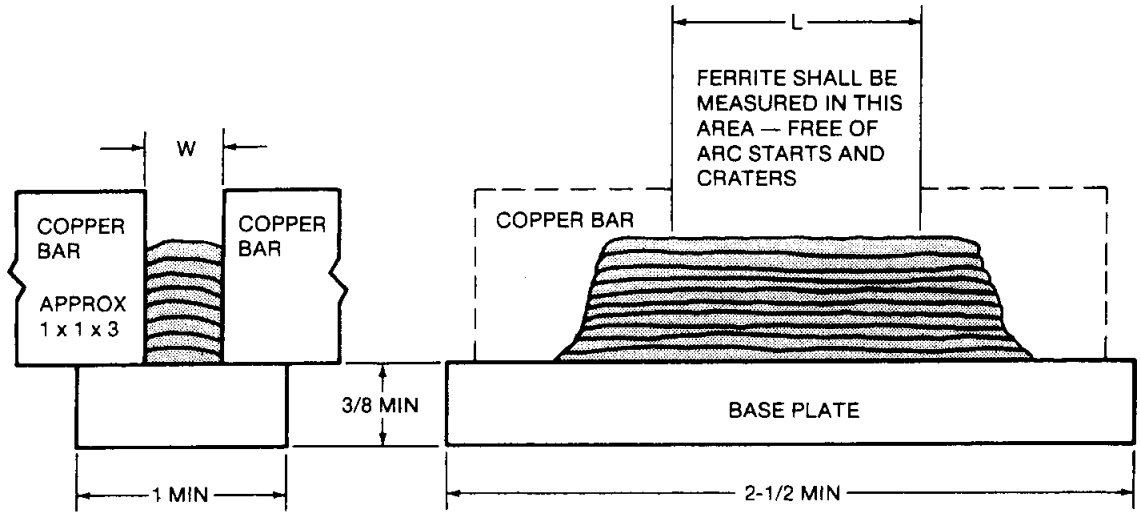

NOTE: ALL DIMENSIONS ARE IN INCHES.

Electrode Diameter, in.	Welding Current Amperes[a] -15, -16, -17, -25, -26	Approximate Dimensions of Deposit, in. W	L
1/16	35-50	0.25	1-1/4
5/64	45-60	0.25	1-1/4
3/32	65-90	0.3	1-1/2
1/8	90-120	0.4	1-1/2
5/32	120-150	0.5	1-1/2
3/16	160-200	0.6	1-1/2
7/32	200-240	0.7	1-1/2
1/4	240-280	0.7	1-1/2

a. Recommended welding current will vary widely depending on the type of core wire employed. Consult the manufacturer for specific recommendations. Welding current used to produce the test specimen should be reported.

SI Equivalents	
in.	mm
1/16	1.6
5/64	2.0
3/32	2.4
1/8	3.2
5/32	4.0
3/16	4.8
7/32	5.6
1/4	6.4
0.25	6.4
0.3	7.6
3/8	9.5
0.4	10
0.5	13
0.6	15
0.7	18
1	25
1-1/4	32
1-1/2	38
2-1/2	64
3	76

FIG. A1 WELD PAD FOR FERRITE TEST

among these diagrams and their recommended applications.

A6.10.1 WRC-1988 Diagram (Fig. A3) predicts ferrite in Ferrite Number (FN).[9] This diagram is the newest of the diagrams mentioned. Studies within the WRC Subcommittee on Welding of Stainless Steel and within Commission II of the International Institute of Welding show a closer agreement between measured and predicted ferrite using this diagram than when using the DeLong Diagram. It should be noted that predictions of the WRC-1988 Diagram are independent of silicon and manganese contents because these elements were not found to have statistically significant effects. The WRC-1988 Diagram is preferred for "300" series stainless steels and for duplex stainless alloys. It may not be applicable to compositions having greater than 0.2 percent of nitrogen and greater than 10 percent of manganese.

A6.10.2 Espy Diagram calculates the percent ferrite (Fig. A4) rather than FN of deposits of the "200" series (see A2.1) having manganese levels up to 15

[9] McCowan, C. N., Siewart, T. A., and Olson, D. L. "Stainless steel weld metal prediction of ferrite." Bulletin 342. New York: Welding Research Council, April 1989.

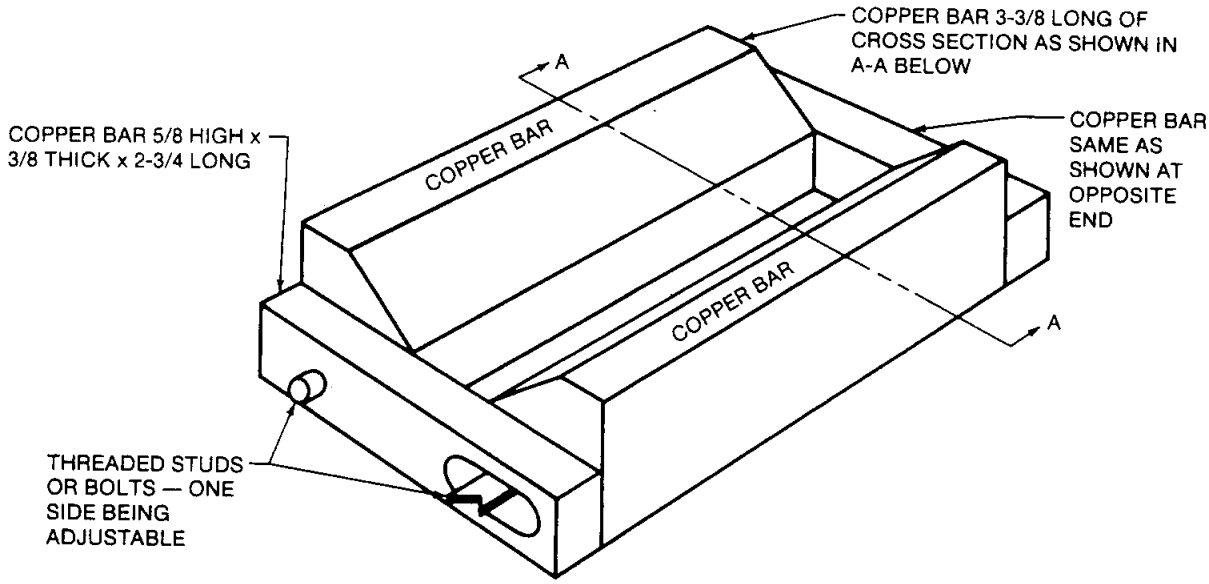

NOTE: ALL DIMENSIONS ARE IN INCHES.

SI Equivalents	
in.	mm
5/32	4.0
3/16	4.8
3/8	9.5
5/8	16
1	25
2-3/4	70
3-3/8	85

TYPE 1
FOR 5/32 DIAM ELECTRODES AND SMALLER

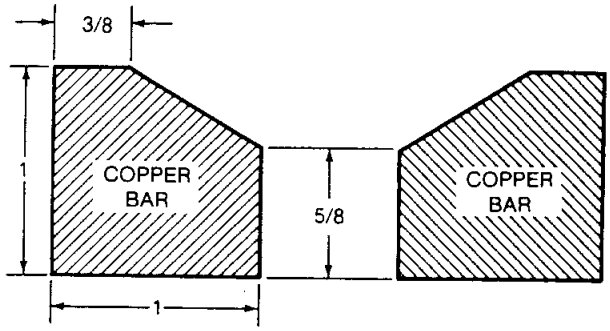

THIS DESIGN ALLOWS INCREASED VISIBILITY, MAKING IT EASIER TO HOLD A SHORT ARC LENGTH.

CROSS SECTION A-A

TYPE 2
FOR 3/16 & LARGER DIAM WELDING ELECTRODES
AND FOR ANY PADS ON CARBON STEEL BASE PLATE

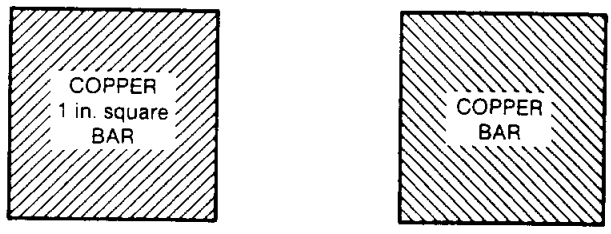

FIG. A2 OPTIONAL WELDING FIXTURE FOR WELDING FERRITE TEST PADS

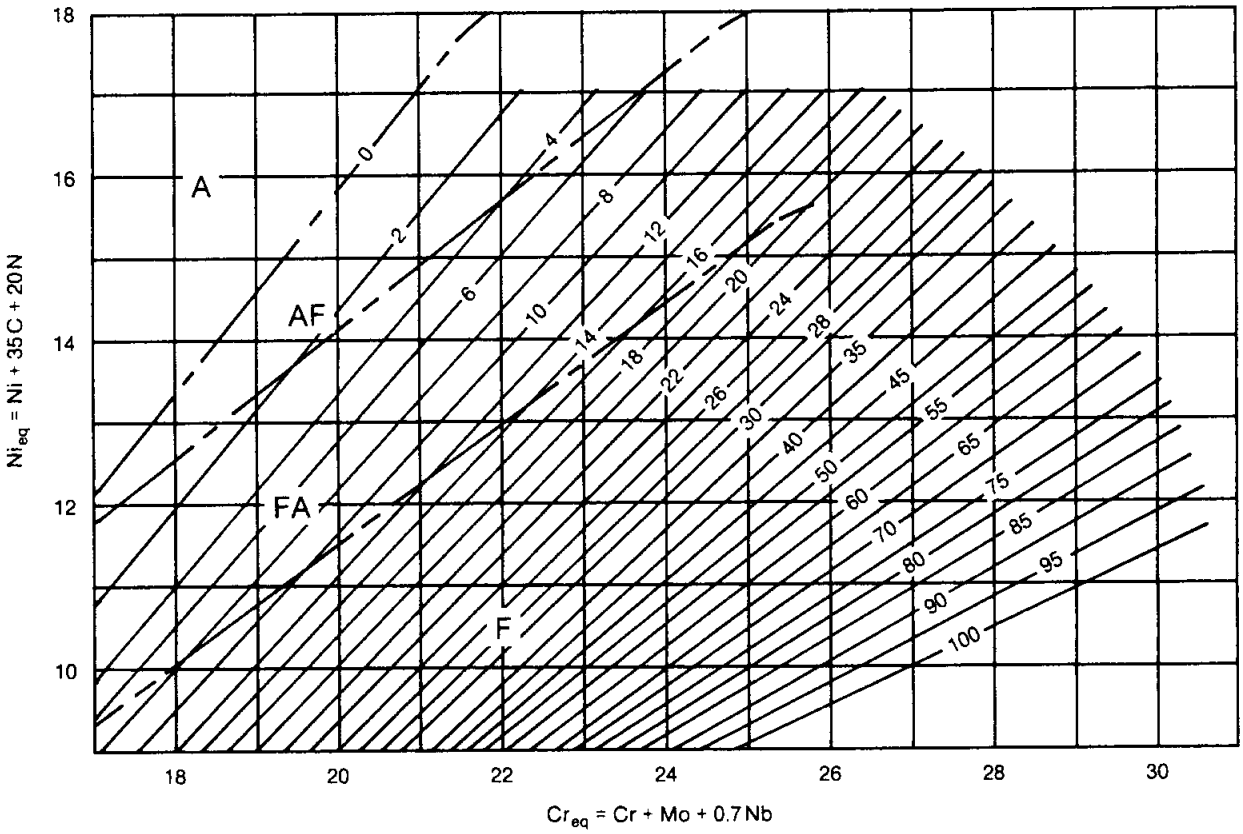

FIG. A3 WRC-1988 (FN) DIAGRAM FOR STAINLESS STEEL WELD METAL

percent and nitrogen contents up 0.35 percent (nitrogen-strengthened austenitic stainless steels).[10]

A6.10.3 DeLong Diagram[11] is a modified Schaeffler Diagram[12] predicting the Ferrite Number (FN) up to a maximum of 18 FN. The diagram includes the nitrogen level into the calculation to predict the FN. The DeLong modifications to the Schaeffler Diagram provide a better correlation between the calculated and measured ferrite content of the weld metal, therefore, the Schaeffler Diagram is not shown in this specification. The new WRC-1988 Diagram, see Fig. A3, is the most accurate and preferred diagram for predicting the ferrite in "300" series stainless steel weld metals. Future publications of this specification may not include the DeLong Diagram.

A6.10.4 The differences between measured and calculated ferrite are somewhat dependent on the ferrite level of the deposit, increasing as the ferrite level increases. The agreement between the calculated and measured ferrite values is also strongly dependent on the quality of the chemical analysis. Variations in the results of the chemical analyses encountered from laboratory to laboratory can have significant effects on the calculated ferrite value, changing it as much as 4 to 8 FN.

A7. Description and Intended Use of Filler Metals

A7.1 E209. The nominal composition (wt.%) of this weld metal is 22 Cr, 11 Ni, 5.5 Mn, 2 Mo, and 0.20 N. Electrodes of this composition are most often used to weld AISI Type 209 (UNS S20910) base metals. The alloy is a nitrogen-strengthened austenitic stainless steel exhibiting high strength with good toughness over

[10] Espy, R. H. "Weldability of nitrogen-strengthened stainless steels." *Welding Journal,* 61(5): 149s-156s, 1982.

[11] DeLong, W. T. (1974 Adams Lecture) "Ferrite in austenitic stainless steel weld metal." *Welding Journal,* 53(7): 273s to 286s, 1974.

[12] Schaeffler, A. E. *Metal Progress* (56): 680-680B.

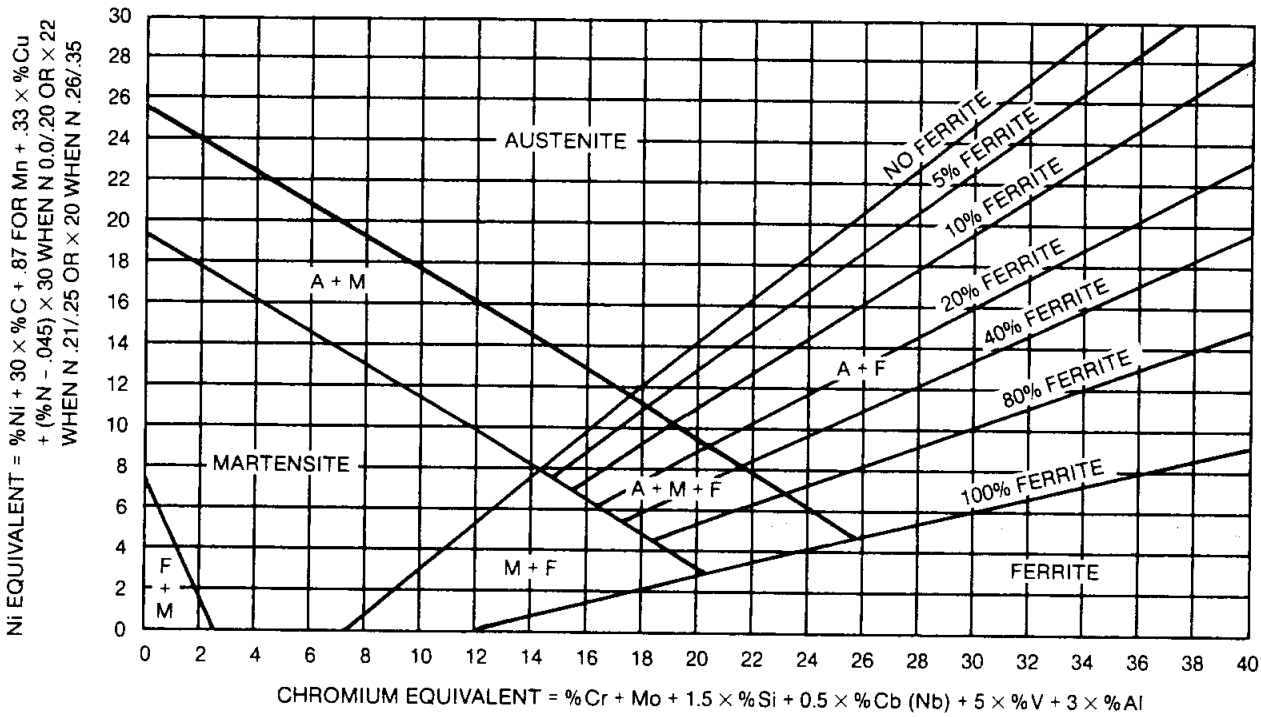

FIG. A4 ESPY PERCENT FERRITE DIAGRAM FOR STAINLESS WELD METAL

a wide range of temperatures. Nitrogen alloying reduces the tendency for intergranular carbide precipitation in the weld area by inhibiting carbon diffusion and thereby increasing resistance to intergranular corrosion. Nitrogen alloying coupled with the molybdenum content provides superior resistance to pitting and crevice corrosion in aqueous chloride-containing media. Type E209 electrodes have sufficient total alloy content for use in joining dissimilar alloys, like mild steel and the stainless steels and also for direct overlay on mild steel for corrosion applications.

A7.2 E219. The nominal composition (wt.%) of this weld metal is 20 Cr, 6 Ni, 9 Mn, and 0.20 N. Electrodes of this composition are most often used to weld AISI Type 219 (UNS S21900) base metals. This alloy is a nitrogen-strengthened austenitic stainless steel exhibiting high strength with good toughness over a wide range of temperatures. Nitrogen alloying reduces the tendency for intergranular carbide precipitation in the weld area by inhibiting carbon diffusion and thereby, increases resistance to intergranular corrosion. Nitrogen alloying also improves resistance to pitting and crevice corrosion in aqueous chloride-containing media. The E219 electrodes have sufficient total alloy content for use in joining dissimilar alloys, like mild steel and the stainless steels, and also for direct overlay on mild steel for corrosion applications.

A7.3 E240. The nominal composition (wt.%) of this weld metal is 18 Cr, 5 Ni, 12 Mn, and 0.02 N. Electrodes of this composition are most often used to weld AISI Type 240 and 241 base metals. These alloys are nitrogen-strengthened austenitic stainless steels exhibiting high strength with good toughness over a wide range of temperatures. Significant improvement in resistance to wear in particle-to-metal and metal-to-metal (galling) applications is a desirable characteristic when compared to the more conventional austenitic stainless steels like Type 304. Nitrogen alloying reduces the tendency for intergranular carbide precipitation in the weld area by inhibiting carbon diffusion and thereby increasing resistance to intergranular corrosion.

Nitrogen alloying also improves resistance to pitting and crevice corrosion in aqueous chloride-containing media. In addition, weldments in alloys AISI 240 and AISI 241 when compared to Type 304, exhibit improved resistance to transgranular stress corrosion cracking in hot aqueous chloride-containing media. The E240 electrodes have sufficient total alloy content for use in joining dissimilar alloys, like mild steel and the stainless

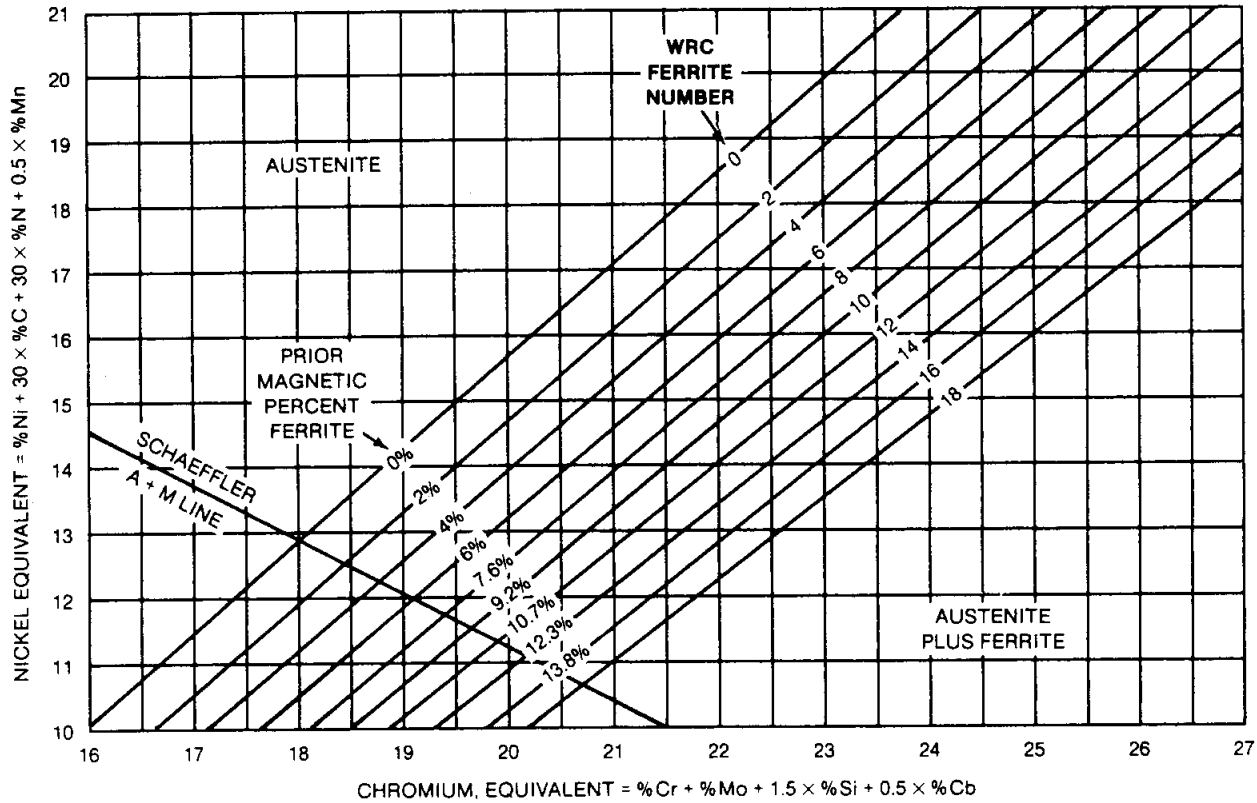

Calculate the nickel and chromium equivalents from the weld metal analysis. If nitrogen analysis of the weld metal is not available, assume 0.06% for GTA and covered electrode, or 0.08% for GMA weld metals. If the chemistry is accurate the diagram predicts the WRC Ferrite Number within plus or minus 3 in approximately 90% of the tests for the 308, 309, 316 and 317 families.

FIG. A5 DELONG (FN) DIAGRAM FOR STAINLESS STEEL WELD METAL

steels, and also for direct overlay on mild steel for corrosion and wear applications.

A7.4 E307. The nominal composition (wt.%) of this weld metal is 19 Cr, 9.8 Ni, 4 Mn. Electrodes of this composition are used primarily for moderate strength welds with good crack resistance between dissimilar steels such as austenitic manganese steel and carbon steel forgings or castings.

A7.5 E308. The nominal composition (wt.%) of this weld metal is 19 Cr, and 10 Ni. Electrodes of this composition are most often used to weld base metal of similar composition such as AISI Types 301, 302, 304, and 305.

A7.6 E308H. These electrodes are the same as E308 except that the allowable carbon content has been restricted to the higher portion of the E308 range. Carbon content in the range of 0.04-0.08 provides higher tensile and creep strengths at elevated temperatures. These electrodes are used for welding Type 304H base metal.

A7.7 E308L. The composition of the weld metal is the same as E308, except for the restricted carbon content. The 0.04 percent max carbon content of weld metal deposited by these electrodes reduces the possibility of intergranular carbide precipitation and thereby increases the resistance to intergranular corrosion without the use of stabilizers such as columbium (niobium) or titanium. A carbon content of 0.04 percent max has been shown to be adequate in weld metal, even though it is recognized that similar base metal specifications require a 0.03 percent limitation. This low carbon alloy, however, is not as strong at elevated temperature as the columbium-stabilized alloys or 304H.

A7.8 E308Mo. These electrodes are the same as E308, except for the addition of molybdenum. E308Mo electrodes are recommended for welding ASTM CF8M

stainless steel castings, as they match the base metal with regard to chromium, nickel, and molybdenum. They may also be used for welding wrought materials such as Type 316 stainless when increased ferrite is desired beyond that attainable with E316 electrodes.

A7.9 E308MoL. These electrodes are recommended for welding ASTM CF3M stainless steel castings, as they match the base metal with regard to chromium, nickel, and molybdenum. E308MoL electrodes may also be used for welding wrought materials such as Type 316L stainless when increased ferrite is desired beyond that attainable with E316L electrodes.

A7.10 E309. The nominal composition (wt.%) of this weld metal is 23.5 Cr, 13 Ni. Electrodes of this composition are commonly used for welding similar alloys in wrought or cast form. They are used for welding dissimilar metals, such as joining Type 304 to carbon steel, welding the clad side of Type 304 clad steels, and applying stainless steel sheet linings to carbon steel shells. Occasionally, they are used to weld Type 304 and similar base metals where severe corrosion conditions exist requiring higher alloy weld metal.

A7.11 E309L. The composition of this weld metal is the same as that deposited by E309 electrodes, except for the restricted carbon content. The 0.04 percent max carbon content of these weld deposits reduces the possibility of intergranular carbide precipitation and thereby increases the resistance to intergranular corrosion without the use of stabilizers such as columbium (niobium) and titanium. This low carbon alloy, however, is not as strong at elevated temperature as the columbium-stabilized alloys or high carbon content Type 309 deposits.

A7.12 E309Cb. The composition of this weld metal is the same as Type 309, except for the addition of columbium (niobium) and a reduction in the carbon limit. The columbium (niobium) provides resistance to carbide precipitation and thus increases intergranular corrosion resistance and also provides higher strength in elevated temperature service. E309Cb electrodes are used also for welding Type 347 clad steels or for the overlay of carbon steel.

A7.13 E309Mo. The composition of this weld metal is the same as that deposited by E309 electrodes, except for the addition of molybdenum and a small reduction in the carbon limit. These electrodes are used for welding Type 316 clad steels or for the overlay of carbon steels.

A7.14 E309MoL. The composition of this weld metal is the same as that deposited by E309Mo electrodes, except for the restricted carbon content. The lower carbon content of the weld metal reduces the possibility of intergranular corrosion.

A7.15 E310. The nominal composition (wt.%) of this weld metal is 26.5 Cr, 21 Ni. Electrodes of this composition are most often used to weld base metals of similar composition.

A7.16 E310H. The composition of this weld metal is the same as that deposited by E310 electrodes, except that carbon ranges from 0.35 to 0.45 percent. These electrodes are used primarily for welding or repairing high alloy heat and corrosion resistant castings of the same general composition which are designated as Type HK by the Alloy Castings Institute. The alloy has high strength at temperatures over 1700°F (930°C). It is not recommended for high sulfur atmospheres or where severe thermal shock is present. Long time exposure to temperatures in the approximate range of 1400 to 1600°F (760 to 870°C) may induce formation of sigma and secondary carbides which may result in reduced corrosion resistance, reduced ductility, or both.

A7.17 E310Cb. The composition of this weld metal is the same as that deposited by E310 electrodes, except for the addition of columbium (niobium) and a reduction in carbon limit. These electrodes are used for the welding of heat resisting castings, Type 347 clad steels, or the overlay of carbon steels.

A7.18 E310Mo. The composition of this weld metal is the same as that deposited by E310 electrodes, except for the addition of molybdenum and a reduction in carbon limit. These electrodes are used for the welding of heat resisting castings, Type 316 clad steels, or for the overlay of carbon steels.

A7.19 E312. The nominal composition (wt.%) of this weld metal is 30 Cr, 9 Ni. These electrodes were originally designed to weld cast alloys of similar composition. They have been found to be valuable in welding dissimilar metals, especially if one of them is a stainless steel, high in nickel. This alloy gives a two-phase weld deposit with substantial amounts of ferrite in an austenitic matrix. Even with considerable dilution by austenite-forming elements, such as nickel, the microstructure remains two-phase and thus highly resistant to weld metal cracks and fissures. Applications should be limited to service temperature below 800°F (420°C) to avoid formation of secondary brittle phases.

A7.20 E316. The nominal composition (wt.%) of this weld metal is 18.5 Cr, 12.5 Ni, 2.5 Mo. These electrodes are used for welding Type 316 and similar alloys. They have been used successfully in certain applications involving special base metals for high-temperature service. The presence of molybdenum provides creep resistance at elevated temperatures. Rapid corrosion of Type 316 weld metal may occur when the following three factors co-exist:

(1) The presence of a continuous or semicontinuous network of ferrite in the weld metal microstructure

(2) A composition balance of the weld metal giving a chromium-to-molybdenum ratio of less than 8.2 to 1

(3) Immersion of the weld metal in a corrosive medium

Attempts to classify the media in which accelerated corrosion will take place by attack on the ferrite phase have not been entirely successful. Strong oxidizing and mildly reducing environments have been present where a number of corrosion failures were investigated and documented. The literature should be consulted for latest recommendations.

A7.21 E316H. These electrodes are the same as E316, except that the allowable carbon content has been restricted to the higher portion of the E316 range. Carbon content in the range of 0.04 to 0.08 provides higher tensile and creep strengths at elevated temperatures. These electrodes are used for welding 316H base metal.

A7.22 E316L. This composition is the same as E316, except for the restricted carbon content. The 0.04 percent max carbon content of weld metal deposited by these electrodes reduces the possibility of intergranular carbide precipitation and thereby increases the resistance to intergranular corrosion without the use of stabilizers such as columbium (niobium) or titanium. These electrodes are used principally for welding low carbon, molybdenum-bearing austenitic alloys. Tests have shown that 0.04 percent carbon limit in the weld metal gives adequate protection against intergranular corrosion in most cases. This low carbon alloy, however, is not as strong at elevated temperatures as Type E316H.

A7.23 E317. The alloy content of weld metal deposited by these electrodes is somewhat higher than that of E316 electrodes, particularly in molybdenum. These electrodes are usually used for welding alloys of similar composition and are utilized in severely corrosive environments (such as those containing halogens) where crevice and pitting corrosion are of concern.

A7.24 E317L. The composition of this weld metal is the same as that deposited by E317 electrodes, except for the restricted carbon content. The 0.04 percent max carbon content of weld metal deposited by these electrodes reduces the possibility of intergranular carbide precipitation and thereby increases the resistance to intergranular corrosion without the use of stabilizers such as columbium (niobium) or titanium. This low carbon alloy, however, is not as strong at elevated temperatures as the columbium (niobium) stabilized alloys or the standard Type 317 weld metal with a higher carbon content.

A7.25 E318. The composition of this weld metal is the same as that deposited by E316 electrodes, except for the addition of columbium (niobium). Columbium (niobium) provides resistance to intergranular carbide precipitation and thus increased resistance to intergranular corrosion. These electrodes are used primarily for welding base metals of similar composition.

A7.26 E320. The nominal composition (wt.%) of this weld metal is 20 Cr, 34 Ni, 2.5 Mo, 3.5 Cu, with Cb (Nb) added to improve resistance to intergranular corrosion. These electrodes are primarily used to weld base metals of similar composition for applications where resistance to severe corrosion is required for a wide range of chemicals including sulfuric and sulfurous acids and their salts. These electrodes can be used to weld both castings and wrought alloys of similar composition without postweld heat treatment.

A modification of this grade without columbium (niobium) is available for repairing castings which do not contain columbium. With this modified composition, solution annealing is required after welding.

A7.27 E320LR (Low Residuals). Weld metal deposited by E320LR electrodes has the same basic composition as that deposited by E320 electrodes; however, the elements C, Si, P, and S are specified at lower maximum levels, and Cb (Nb) and Mn are controlled within narrower ranges. These changes reduce the weld metal fissuring (while maintaining the corrosion resistance) frequently encountered in fully austenitic stainless steel weld metals. Consequently, welding practices typically used to deposit ferrite-containing austenitic stainless steel weld metals can be used. Type 320LR weld metal has a lower minimum tensile strength than Type 320 weld metal.

A7.28 E330. The nominal composition (wt.%) of this weld metal is 35 Ni, 15.5 Cr. These electrodes are commonly used where heat- and scale-resisting properties above 1800°F (980°C) are required. However, high sulfur environments may adversely effect perform-

ance at elevated temperature. Repairs of defects in alloy castings and the welding of castings and wrought alloys of similar composition are the most common applications.

A7.29 E330H. The composition of this weld metal is the same as that deposited by E330 electrodes, except that carbon ranges from 0.35 to 0.45 percent. These electrodes are used primarily for the welding and repairing of high alloy heat and corrosion resistant castings of the same general composition which are designated HT by the Alloy Castings Institute. This composition can be used to 2100°F (1150°C) in oxidizing atmospheres and at 2000°F (1090°C) in reducing atmospheres. However, high sulfur environments may adversely affect performance at elevated temperature.

A7.30 E347. The nominal composition (wt.%) of this weld metal is 19.5 Cr, 10 Ni with Cb (Nb) or Cb (Nb) plus Ta added as a stabilizer. Either of these additions reduces the possibility of intergranular chromium carbide precipitation and thus increases resistance to intergranular corrosion.

These electrodes are usually used for welding chromium-nickel alloys of similar composition stabilized either with columbium (niobium) or titanium. Electrodes depositing titanium as a stabilizing element are not commercially available because titanium is not readily transferred across the arc in shielded metal arc welding. Although columbium (niobium) is the stabilizing element usually specified in Type 347 alloys, it should be recognized that tantalum also is present. Tantalum and columbium (niobium) are almost equally effective in stabilizing carbon and in providing high-temperature strength. This specification recognizes the usual commercial practice of reporting columbium (niobium) as the sum of columbium (niobium) plus tantalum. If dilution by the base metal produces a low ferrite or fully austenitic weld metal deposit, crack sensitivity of the weld may increase substantially.

Some applications, especially those involving high-temperature service, are adversely affected if the ferrite content is too high. Consequently, a high ferrite content should not be specified unless tests prove it to be absolutely necessary.

A7.31 E349. The nominal composition (wt.%) of this weld metal is 19.5 Cr, 9 Ni, 1 Cb(Nb), 0.5 Mo, 1.4 W. These electrodes are used for welding steels of similar composition such as AISI Type 651 or 652. The combination of columbium (niobium), molybdenum, and tungsten with chromium and nickel gives good high-temperature rupture strength. The chemical composition of the weld metal results in an appreciable content of ferrite which increases the crack resistance of the weld metal.

A7.32 E383. The nominal composition (wt.%) of this weld metal is 28 Cr, 31.5 Ni, 3.7 Mo, 1 Cu. These electrodes are used to weld base metal of a similar composition to itself and to other grades of stainless steel. Type E383 weld metal is recommended for sulphuric and phosphoric acid environments.

The elements C, Si, P, and S are specified at low maximum levels to minimize weld metal hot cracking and fissuring (while maintaining the corrosion resistance) frequently encountered in fully austenitic stainless steel weld metals.

A7.33 E385. The nominal composition (wt.%) of this weld metal is 20.5 Cr, 25 Ni, 5 Mo, 1.5 Cu. These electrodes are used primarily for welding of Type 904L materials for the handling of sulphuric acid and many chloride-containing media. E385 electrodes also may be used to join Type 317L material where improved corrosion resistance in specific media is needed. E385 electrodes also can be used for joining Type 904L base metal to other grades of stainless. The elements C, Si, P and S are specified at lower maximum levels to minimize weld metal hot cracking and fissuring (while maintaining corrosion resistance) frequently encountered in fully austenitic weld metals.

A7.34 E410. This 12 Cr alloy is an air-hardening steel. Preheat and postheat treatments are required to achieve welds of adequate ductility for many engineering purposes. The most common application of these electrodes is for welding alloys of similar compositions.

They are also used for surfacing of carbon steels to resist corrosion, erosion, or abrasion.

A7.35 E410NiMo. These electrodes are used for welding ASTM CA6NM castings or similar materials, as well as light gage Type 410, 410S, and 405 base metals. Weld metal deposited by these electrodes are modified to contain less chromium and more nickel than weld metal deposited by E410 electrodes. The objective is to eliminate ferrite in the microstructure, as ferrite has a deleterious effect on mechanical properties of this alloy. Final postweld heat treatment should not exceed 1150°F (620°C). Higher temperatures may result in rehardening due to untempered martensite in the microstructure after cooling to room temperature.

A7.36 E430. The weld metal deposited by these electrodes contains between 15 and 18 Cr (wt.%). The composition is balanced by providing sufficient chromium to give adequate corrosion resistance for the usual applications and yet retain sufficient ductility

in the heat-treated condition to meet the mechanical requirements of the specification. (Excessive chromium will result in lowered ductility.) Welding with E430 electrodes usually requires preheat and postheat. Optimum mechanical properties and corrosion resistance are obtained only when the weldment is heat treated following the welding operation.

A7.37 E502. The nominal composition (wt.%) of this weld metal is 5 Cr, 0.5 Mo. These electrodes are used for welding base metal of similar composition, usually in the form of pipe or tubing. The alloy is an air-hardening material; therefore, when welding with these electrodes, preheat and postweld heat treatment are required.

A7.38 E505. The nominal composition (wt.%) of this weld metal is 9 Cr, 1 Mo. These electrodes are used for welding base metal of similar composition, usually in the form of pipe or tubing. The alloy is an air-hardening material and, therefore, when welding with these electrodes, preheat and postweld heat treatment are required.

A7.39 E630. The nominal composition (wt.%) of these electrodes is 16.4 Cr, 4.7 Ni, 3.6 Cu. These electrodes are primarily designed for welding ASTM A564, Type 630, and some other precipitation-hardening stainless steels. The weld metal is modified to prevent the formation of ferrite networks in the martensite microstructure which could have a deleterious effect on mechanical properties. Dependent on the application and weld size, the weld metal may be used either as-welded, welded and precipitation hardened, or welded, solution treated and precipitation hardened.

A7.40 E16-8-2. The nominal composition (wt.%) of this weld metal is 15.5 Cr, 8.5 Ni, 1.5 Mo. These electrodes are used primarily for welding stainless steel, such as Types 16-8-2, 316, and 347, for high-pressure, high-temperature piping systems. The weld deposit usually has a Ferrite Number no higher than 5 FN. The deposit also has good hot ductility properties which offer relative freedom from weld or crater cracking even under high-restraint conditions. The weld metal is usable in either the as-welded or solution-treated condition. These electrodes depend on a very carefully balanced chemical composition to develop their fullest properties. Corrosion tests indicate that Type 16-8-2 weld metal may have less corrosion resistance than Type 316 base metal depending on the corrosive media. Where the weldment is exposed to severe corrodents, the surface layers should be deposited with a more corrosion resistant weld metal.

A7.41 E7Cr. The nominal composition (wt.%) of this weld metal is 7 Cr, 0.5 Mo. These electrodes are primarily used in welding base metal of similar composition. The 7 Cr base metal usually is furnished as tubing, pipe, or casting. This alloy is an air-hardening material and requires the use of both preheat and postweld heat treatment for satisfactory welding and service.

A7.42 E2209. The nominal composition (wt.%) of this weld metal is 22.5 Cr, 9.5 Ni, 3 Mo, 0.15 N. Electrodes of this composition are used primarily to weld duplex stainless steels which contain approximately 22 percent of chromium. Weld metal deposited by these electrodes has "duplex" microstructure consisting of an austenite-ferrite matrix. Weld metal deposited by E2209 electrodes combines increased tensile strength with improved resistance to pitting corrosive attack and to stress corrosion cracking.

A7.43 E2553. The nominal composition (wt.%) of this weld metal is 25.5 Cr, 7.5 Ni, 3.5 Mo, 2 Cu and 0.17 N. These electrodes are used primarily to weld duplex stainless steels which contain approximately 25 percent of chromium. Weld metal deposited by these electrodes has a "duplex" microstructure consisting of an austenite-ferrite matrix. Weld metal deposited by E2553 electrodes combines increased tensile strength with improved resistance to pitting corrosive attack and to stress corrosion cracking.

A8. Classification as to Usability

A8.1 Five basic usability classifications are provided in this specification, as shown in Table 2.

A8.2 The type of covering applied to a core wire to make a shielded metal arc welding electrode determines the usability characteristics of the electrode. The following discussion of covering types is based upon terminology commonly used by the industry; no attempt has been made to specifically define the composition of the different covering types.

A8.3 Usability Designation -15. The electrodes are usable with dcep (electrode positive) only. While use with alternating current is sometimes accomplished, they are not intended to qualify for use with this type of current. Electrode sizes $^{5}/_{32}$ in. (4.0 mm) and smaller may be used in all positions of welding.

A8.4 Usability Designation -16. The covering for these electrodes generally contains readily ionizing elements, such as potassium, in order to stabilize the arc

for welding with ac. Electrode sizes $^5/_{32}$ in. (4.0 mm) and smaller may be used in all positions of welding.

A8.5 Usability Designation -17. The covering of these electrodes is a modification of the -16 covering in that considerable silica replaces some of the titania of the -16 covering. Since both the -16 and the -17 electrode coverings permit ac operation, both covering types were classified as -16 in the past because there was no classification alternative until this revision of ANSI/AWS A5.4. However, the operational differences between the two types have become significant enough to warrant a separate classification.

On horizontal fillet welds, electrodes with a -17 covering tend to produce more of a spray arc and a finer rippled weld-bead surface than do those with the -16 coverings. A slower freezing slag of the -17 covering also permits improved handling characteristics when employing a drag technique. The bead shape on horizontal fillets is typically flat to concave with -17 covered electrodes as compared to flat to slightly convex with -16 covered electrodes. When making fillet welds in the vertical position with upward progression, the slower freezing slag of the -17 covered electrodes requires a slight weave technique to produce the proper bead shape. For this reason, the minimum leg-size fillet that can be properly made with a -17 covered electrode is larger than that for a -16 covered electrode. While these electrodes are designed for all-position operation, electrode sizes $^3/_{16}$ in. (4.8 mm) and larger are not recommended for vertical or overhead welding.

A8.6 Usability Designation -25. This slag system is very similar in composition and operating characteristics to that of the -15 designation, and so that description also applies here. The electrode differs from the -15 type in that the core wire may be of a substantially different composition, such as mild steel, that may require a much higher welding current. The additional alloys necessary to obtain the required analysis are contained in the covering which will be of greater diameter than the corresponding -15 type. These electrodes are recommended for welding only in the flat and horizontal positions.

A8.7 Usability Designation -26. This slag system is very similar in composition and operating characteristics to that of the -16 designation, and so that description also applies here. The electrode differs from the -16 type in that the core wire may be of a substantially different composition such as mild steel that may require a much higher welding current. The additional alloys necessary to obtain the required analysis are contained in the covering which will be of much larger diameter than the corresponding -16 type. These electrodes are recommended for welding only in the flat and horizontal positions.

A9. Special Tests

A9.1 Although welds made with electrodes covered by this specification are commonly used in corrosion- or heat-resisting applications, it is not practical to require tests for corrosion or scale resistance on welds or weld metal specimens. Such special tests which are pertinent to the intended application may be conducted as agreed upon between supplier and purchaser. This section is included for the guidance of those who desire to specify such special tests.

A9.2 Corrosion or scaling tests of joint specimens have the advantage that the joint design and welding procedure can be made identical to those being used in fabrication. They have the disadvantage of being a test of the combined properties of the weld metal, the heat-affected zone of the base metal, and the unaffected base metal. Furthermore, it is difficult to obtain reproducible data if a difference exists between the corrosion or oxidation rates of the various metal structures (weld metal, heat-affected zone, and unaffected base metal). Test samples cannot be readily standardized if welding procedure and joint design are to be considered variables. Joint specimens for corrosion tests should not be used for qualifying the electrode but may be used for qualifying welding procedures using approved materials.

A9.3 All-weld-metal specimens for testing corrosion or scale resistance are prepared by following the procedure outlined for the preparation of pads for chemical analysis (see Section 9). The pad size should be at least $^3/_4$ in. (19 mm) in height by $2^1/_2$ in. (65 mm) wide by $1 + {}^5/_8 n$ in. ($25 + 16n$ mm) long, where n represents the number of specimens required from the pad. Specimens measuring $^1/_2 \times 2 \times {}^1/_4$ in. ($13 \times 50 \times 6.4$ mm) are machined from the top surface of the pad in such a way that the 2 in. (50 mm) dimension of the specimen is parallel to the $2^1/_2$ in. (65 mm) width dimension of the pad and the $^1/_2$ in. (13 mm) dimension is parallel to the length of the pad.

A9.4 The heat treatments, surface finish, and marking of the specimens prior to testing should be in accordance with standard practices for tests of similar alloys in the wrought or cast forms. The testing procedure should correspond to the ASTM G4, *Standard Method for Conducting Corrosion Tests in Plant Equipment* or ASTM A262, *Standard Practices for Detecting Suscepti-*

bility to Intergranular Attack in Austenitic Stainless Steels.

A9.5 Tests for mechanical properties of joint specimens may be desired when the intended application involves the welding of dissimilar metals. Procedures for the mechanical testing of such joints should be in accordance with the latest edition of ANSI/AWS B4.0, *Standard Methods for Mechanical Testing of Welds.*

A9.6 Tests of joint specimens may be influenced by the properties of the base metal and welding procedures and may not provide adequate tests of the weld metal. Such tests should be considered as tests for qualifying welding procedures using approved materials rather than tests for qualifying the electrodes.

A9.7 Where fabrication codes require tests of welds in heat-treated conditions other than those specified in Table 2, all-weld-metal tests of heat-treated specimens may be desired. For the preparation of such specimens, the procedures outlined in Section 10, Tension Test and Section 11, Fillet Weld Test, should be followed.

A9.8 Fully austenitic stainless steel weld metals are known to possess excellent toughness at cryogenic temperatures such as −320°F (−196°C). An example of this is the successful use of E310 (which deposits fully austenitic weld metal) to join 9 percent nickel steel for use in cryogenic service. To ensure freedom from brittle failure, Section VIII of the *ASME Boiler and Pressure Vessel Code* requires weldments intended for cryogenic service be qualified by Charpy V-notch testing. The criterion for acceptability is the attainment of a lateral expansion opposite the notch of not less than 15 mils (0.38 mm) for each of three specimens. In general, fully austenitic stainless steel weld metals such as Types 310, 320, 320LR, and 330 can be expected to meet the 15 mils (0.38 mm) requirement at −320°F (−196°C).

A9.9 Austenitic stainless steel weld metals of lower alloy content than those noted above usually are not fully austenitic but contain some delta ferrite. It has been found that such weld metals require judicious compositional balances to meet the 15 mils (0.38 mm) lateral expansion criteria even at moderately low temperatures such as −150°F (−100°C).

A9.10 Electrode classifications which can be used if special attention is given to the weld deposit composition content to maximize toughness are E308L-XX, E309L-XX, and E316L-XX. Published studies of the effect of composition changes on weldment toughness properties for these types have shown the following:

A9.10.1 Both carbon and nitrogen contents have strong adverse effects on weld metal toughness so that their contents should be minimized. Low carbon weld metals with a nitrogen content below 0.06 percent are preferred.

A9.10.2 Nickel appears to be the only element whose increased content in weld metal improves weld metal toughness.

A9.10.3 Delta ferrite is harmful; therefore, minimizing ferrite in weld metal (3 FN max) is recommended. Weld metal free of ferrite (fully austenitic) is preferred; the more austenitic, the better.

A9.10.4 Fully austenitic E316L weld metal appears to be the preferred composition because of the ease in achieving ferrite-free weld metal, while compositionally conforming to AWS A5.4 and retaining crack resistance.

A9.10.5 Lime covered electrodes tend to produce weldments having slightly superior lateral expansion values for Charpy V-notch impact specimens than titania covered electrodes when weld metal composition factors are essentially the same. This appears to be due to two factors:

A9.10.5.1 Lime coated SMAW electrodes usually provide better protection from nitrogen incursion into the weld metal than that provided by titania coated electrodes. Nitrogen, as noted above, has significantly adverse effects on weld toughness.

A9.10.5.2 Lime coated SMAW electrodes appear to produce weld metals of lower oxygen levels or inclusion population (i.e., cleaner weld metal), or both. The above suggestions are particularly important when the intended application involves very low temperatures such as −320°F (−196°C).

A9.11 Limited SMAW electrode weld metal data have indicated that welding in the vertical position, as compared to flat position welding, does not reduce toughness properties, providing good operator's technique is employed.

A9.12 Where cryogenic service [below −150°F (−100°C)] is intended, it is recommended that each lot of electrodes be qualified with Charpy V-notch impact tests. When such tests are required, the test specimens must be taken from a test plate prepared in accordance with Fig. 2. The impact specimens must be located in the test plate as shown in Fig. A6. The specimens must be prepared and tested in accordance with the impact test sections of the latest edition of ANSI/AWS B4.0, *Standard Methods for Mechanical Testing of*

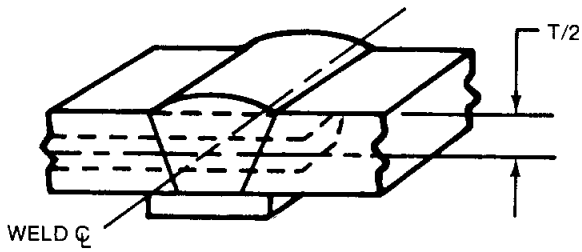

NOTE: SPECIMEN SIZE TO BE IN ACCORDANCE WITH ANSI/AWS B4.0, *STANDARD METHODS FOR MECHANICAL TESTING OF WELDS.*

FIG. A6 ORIENTATION AND LOCATION OF IMPACT SPECIMEN

Welds. The test temperature must be selected on the basis of intended service.

A10. Safety Considerations

A10.1 Burn Protection. Molten metal, sparks, slag, and hot work surfaces are produced by welding, cutting, and allied processes. These can cause burns if precautionary measures are not used. Workers should wear protective clothing made of fire-resistant material. Pant cuffs, open pockets, or other places on clothing that can catch and retain molten metal or sparks should not be worn. High-top shoes or leather leggings and fire-resistant gloves should be worn. Pant legs should be worn over the outside of high-top shoes. Helmets or hand shields that provide protection for the face, neck, and ears, and a head covering to protect the head should be used. In addition, appropriate eye protection should be used.

When welding overhead or in confined spaces, ear plugs to prevent weld spatter from entering the ear canal should be worn in combination with goggles, or equivalent, to give added eye protection. Clothing should be kept free of grease and oil. Combustible materials should not be carried in pockets. If any combustible substance has been spilled on clothing, a change to clean, fire-resistant clothing should be made before working with open arcs or flame. Aprons, cape-sleeves, leggings, and shoulder covers with bibs designed for welding service should be used.

Where welding or cutting of unusually thick base metal is involved, sheet metal shields should be used for extra protection. Mechanization of highly hazardous processes or jobs should be considered. Other personnel in the work area should be protected by the use of noncombustible screens or by the use of appropriate protection as described in the previous paragraph. Before leaving a work area, hot work pieces should be marked to alert other persons of this hazard. No attempt should be made to repair or disconnect electrical equipment when it is under load. Disconnection under load produces arcing of the contacts and may cause burns or shock, or both. *(Note: Burns can be caused by touching hot equipment such as electrode holders, tips, and nozzles. Therefore, insulated gloves should be worn when these items are handled, unless an adequate cooling period has been allowed before touching.)*

The following sources are for more detailed information on personal protection:

(1) American National Standards Institute. ANSI/ASC Z49.1, *Safety in welding and cutting* (published by the American Welding Society). Miami, FL: American Welding Society.

(2) _____. ANSI/ASC Z87.1, *Practice for occupational and educational eye and face protection.* New York: American National Standards Institute.[13]

(3) _____. ANSI/ASC Z41.1, *Safety-toe footwear.* New York: American National Standards Institute.

(4) Occupational Safety and Health Administration. *Code of federal regulations,* Title 29 Labor, Chapter XVII, Part 1910. Washington, D.C.: U.S. Government Printing Office.[14]

A10.2 Electrical Hazards. Electric shock can kill. However, it can be avoided. Live electrical parts should not be touched. The manufacturer's instructions and recommended safe practices should be read and understood. Faulty installation, improper grounding, and incorrect operation and maintenance of electrical equipment are all sources of danger.

All electrical equipment and the workpieces should be grounded. The workpiece lead is not a ground lead. It is used only to complete the welding circuit. A separate connection is required to ground the workpiece. The workpiece should not be mistaken for a ground connection.

The correct cable size should be used, since sustained overloading will cause cable failure and result in possible electrical shock or fire hazard. All electrical connections should be tight, clean, and dry. Poor connections can overheat and even melt. Further, they can produce dangerous arcs and sparks. Water, grease, or dirt should

[13] ANSI documents are available from the American National Standards Institute, 11 West 42nd Street, New York, NY 10036.

[14] OSHA documents are available from U.S. Government Printing office, Washington, D.C., 20402.

not be allowed to accumulate on plugs, sockets, or electrical units. Moisture can conduct electricity. To prevent shock, the work area, equipment, and clothing should be kept dry at all times.

Welders should wear dry gloves and rubber soled shoes, or stand on a dry board or insulated platform. Cables and connections should be kept in good condition. Improper or worn electrical connections may create conditions that could cause electrical shock or short circuits. Worn, damaged, or bare cables should not be used. Open circuit voltage should be avoided. When several welders are working with arcs of different polarities, or when a number of alternating current machines are being used, the open circuit voltages can be additive. The added voltages increase the severity of the shock hazard.

In case of electric shock, the power should be turned off. If the rescuer must resort to pulling the victim from the live contact, nonconducting materials should be used. If the victim is not breathing, cardiopulmonary resuscitation (CPR) should be administered as soon as contact with the electrical source is broken. A physician should be called and CPR continued until breathing has been restored, or until a physician has arrived. Electrical burns are treated as thermal burns; that is, clean, cold (iced) compresses should be applied. Contamination should be avoided; the area should be covered with a clean, dry dressing; and the patient should be transported to medical assistance.

Recognized safety standards such as ANSI/ASC Z49.1, *Safety in Welding and Cutting,* and NFPA No. 70, *National Electrical Code* available from National Fire Protection Association, Batterymarch Park, Quincy, MA 02269, should be followed.

A10.3 Fumes and Gases. Many welding, cutting, and allied processes produce fumes and gases which may be harmful to health. Fumes are solid particles which originate from welding filler metals and fluxes, the base metal, and any coatings present on the base metal. Gases are produced during the welding process or may be produced by the effects of process radiation on the surrounding environment. Management, welders, and other personnel alike should be aware of the effects of these fumes and gases. The amount and composition of these fumes and gases depend upon the composition of the filler metal and base metal, welding process, current level, arc length, and other factors.

The possible effects of over-exposure range from irritation of eyes, skin, and respiratory system to more severe complications. Effects may occur immediately or at some later time. Fumes can cause symptoms such as nausea, headaches, dizziness, and metal fume fever. The possibility of more serious health effects exists when especially toxic materials are involved. In confined spaces, the shielding gases and fumes might displace breathing air and cause asphyxiation. One's head should always be kept out of the fumes. Sufficient ventilation, exhaust at the arc, or both, should be used to keep fumes and gases from your breathing zone and the general area.

In some cases, natural air movement will provide enough ventilation. Where ventilation may be questionable, air sampling should be used to determine if corrective measures should be applied.

More detailed information on fumes and gases produced by the various welding processes may be found in the following:

(1) The permissible exposure limits required by OSHA can be found in *Code of Federal Regulations,* Title 29, Chapter XVII Part 1910.

(2) The recommended threshold limit values for these fumes and gases may be found in the ACGIH, *Threshold Limit Values for Chemical Substances and Physical Agents in the Workroom Environment.*[15]

(3) The results of an AWS-funded study are available in a report entitled, *Fumes and Gases in the Welding Environment.*[16]

A10.4 Radiation. Welding, cutting, and allied operations may produce radiant energy (radiation) harmful to health. One should become acquainted with the effects of this radiant energy.

Radiant energy may be ionizing (such as x-rays), or non-ionizing (such as ultraviolet, visible light, or infrared). Radiation can produce a variety of effects such as skin burns and eye damage, depending on the radiant energy's wavelength and intensity, if excessive exposure occurs.

A10.4.1 Ionizing Radiation. Ionizing radiation is produced by the electron beam welding process. It is ordinarily controlled within acceptance limits by use of suitable shielding enclosing the welding area.

A10.4.2 Non-Ionizing Radiation. The intensity and wave lengths of non-ionizing radiant energy produced depend on many factors, such as the process, welding parameters, electrode and base metal composition, fluxes, and any coating or plating on the base metal. Some processes such as resistance welding and cold pressure welding ordinarily produce negligible

[15] ACGIH documents are available from the American Conference of Governmental Industrial Hygienists, 6550 Glenway Avenue, Building D-5, Cincinnati, OH 45211.

[16] AWS documents are available from the American Welding Society, 550 N.W. LeJeune Road, P.O. Box 351040, Miami, FL 33135.

quantities of radiant energy. However, most arc welding and cutting processes (except submerged arc when used properly), laser welding and torch welding, cutting, brazing, or soldering can produce quantities of non-ionizing radiation such that precautionary measures are necessary.

Protection from possible harmful effects caused by non-ionizing radiant energy from welding include the following measures:

(1) One should not look at welding arcs except through welding filter plates which meet the requirements of ANSI/ASC Z87.1, *Practice for Occupational and Educational Eye and Face Protection,* published by American National Standards Institute. It should be noted that transparent welding curtains are not intended as welding filter plates, but rather are intended to protect a passerby from incidental exposure.

(2) Exposed skin should be protected with adequate gloves and clothing as specified ANSI/ASC Z49.1, *Safety in Welding and Cutting,* published by American Welding Society.

(3) Reflections from welding arcs should be avoided, and all personnel should be protected from intense reflections. *(Note: Paints using pigments of substantially zinc oxide or titanium dioxide have a lower reflectance for ultraviolet radiation.)*

(4) Screens, curtains, or adequate distance from aisles, walkways, etc., should be used to avoid exposing passersby to welding operations.

(5) Safety glasses with UV protective side shields have been shown to provide some beneficial protection from ultraviolet radiation produced by welding arcs.

A10.4.3 Ionizing radiation information sources include:

ANSI/AWS F2.1-78, *Recommended Safe Practices for Electron Beam Welding and Cutting* and the Manufacturer's product information literature.

A10.4.4 The following include non-ionizing radiation information sources:

(1) American National Standards Institute. ANSI Z136.1, *Safe use of lasers.* New York, NY: American National Standards Institute.

(2) _____. ANSI/ASC Z49.1, *Safety in welding and cutting.* (published by AWS) Miami, FL: American Welding Society.

(3) _____. ANSI/ASC Z87.1, *Practice for occupational and educational eye and face protection.* New York, NY: American National Standards Institute.

(4) Hinrichs, J. F. "Project committee on radiation—summary report." *Welding Journal.* January 1978.

(5) Moss, C. E. and Murray, W. E. "Optical radiation levels produced in gas welding, torch brazing, and oxygen cutting." *Welding Journal.* September 1979.

(6) Moss, C. E. "Optical radiation transmission levels through transparent welding curtains." *Welding Journal.* March 1979.

(7) "Optical radiation levels produced by air-carbon arc cutting processes." *Welding Journal.* March 1980.

(8) National Technical Information Service. Non-Ionizing Radiation Protection Special Study No. 42-0053-77, "Evaluation of the potential hazards from actinic ultraviolet radiation generated by electric welding and cutting arcs." Springfield, VA: National Technical Information Service. ADA-033768.

(9) _____. Non-Ionizing Radiation Protection Special Study No. 42-0312-77, "Evaluation of the potential retina hazards from optical radiation generated by electrical welding and cutting arcs." Springfield, VA: National Technical Information Service. ADA-043023.

SPECIFICATION FOR LOW-ALLOY STEEL ELECTRODES FOR SHIELDED METAL ARC WELDING

SFA-5.5

(Identical with AWS Specification A5.5-96.)

1. Scope

This specification prescribes requirements for the classification of low-alloy steel electrodes for shielded metal arc welding of carbon and low-alloy steels. These electrodes include steel alloys in which no single alloying element exceeds 10.5 percent.

PART A — GENERAL REQUIREMENTS

2. Classification

2.1 The welding electrodes covered by this specification are classified according to the following:

(a) Type of current (Table 1)

(b) Type of covering (Table 1)

(c) Welding position (Table 1)

(d) Chemical composition of the weld metal (Table 2)

(e) Mechanical properties of the weld metal in the as-welded or postweld heat-treated condition (Tables 3 and 4)

2.2 Material classified under one classification shall not be classified under any other classification in this specification.

3. Acceptance

Acceptance[1] of the welding electrode shall be in accordance with the provisions of the ANSI/AWS A5.01, *Filler Metal Procurement Guidelines.*

[1] See Section A3, Acceptance (in the Appendix), for further information concerning acceptance, testing of the material shipped, and ANSI/AWS A5.01, *Filler Metal Procurement Guidelines.*

4. Certification

By affixing the AWS specification and classification designations to the packaging, or the classification to the product, the manufacturer certifies that the product meets the requirements of this specification.[2]

5. Units of Measure and Rounding-Off Procedure

5.1 U.S. customary units are the standard units of measure in this specification. The SI units are given as equivalent values to the U.S. customary units. The standard sizes and dimensions in the two systems are not identical and for this reason conversion from a standard size or dimension in one system will not always coincide with a standard size or dimension in the other. Suitable conversions, encompassing standard sizes of both, can be made, however, if appropriate tolerances are applied in each case.

5.2 For the purpose of determining conformance with this specification, an observed or calculated value shall be rounded "to the nearest unit" in the last right-hand place of figures used in expressing the limiting value in accordance with the rounding-off rules given in ASTM E29, *Standard Practice for Using Significant Digits in Test Data to Determine Conformance with Specifications.*

[2] See Section A4, Certification (in the Annex), for further information concerning certification and the testing called for to meet this requirement.

TABLE 1
ELECTRODE CLASSIFICATION

AWS Classification[a]	Type of Covering	Welding Positions for Classification[b]	Type of Current[c]
E7010-X	High-cellulose sodium	F,V,OH,H	DCEP
E7011-X	High-cellulose potassium	F,V,OH,H	ac or DCEP
E7015-X[d,e]	Low-hydrogen sodium	F,V,OH,H	DCEP
E7016-X[d,e]	Low-hydrogen potassium	F,V,OH,H	ac or DCEP
E7018-X[d,e]	Low-hydrogen potassium, iron powder	F,V,OH,H	ac or DCEP
E7020-X	High-iron oxide	H-fillets	ac or DCEN
		F	ac, DCEP or DCEN
E7027-X	High-iron oxide, iron powder	H-fillets	ac or DCEN
		F	ac, DCEP or DCEN
E8010-X	High-cellulose sodium	F,V,OH,H	DCEP
E8011-G	High-cellulose potassium	F,V,OH,H	ac or DCEP
E8013-G	High-titania potassium	F,V,OH,H	ac, DCEP or DCEN
E8015-X[d,e]	Low-hydrogen sodium	F,V,OH,H	DCEP
E8016-X[d,e]	Low-hydrogen potassium	F,V,OH,H	ac or DCEP
E8018-X[d,e]	Low-hydrogen potassium, iron powder	F,V,OH,H	ac or DCEP
E9010-G	High-cellulose sodium	F,V,OH,H	DCEP
E9011-G	High-cellulose potassium	F,V,OH,H	ac or DCEP
E9013-G	High-titania potassium	F,V,OH,H	ac, DCEP or DCEN
E9015-X[d,e]	Low-hydrogen sodium	F,V,OH,H	DCEP
E9016-X[d,e]	Low-hydrogen potassium	F,V,OH,H	ac or DCEP
E9018-X[d,e]	Low-hydrogen potassium, iron powder	F,V,OH,H	ac or DCEP
E9018M[d,e]	Iron-powder, low hydrogen	F,V,OH,H	DCEP
E10010-G	High-cellulose sodium	F,V,OH,H	DCEP
E10011-G	High-cellulose potassium	F,V,OH,H	ac or DCEP
E10013-G	High-titania potassium	F,V,OH,H	ac, DCEP or DCEN
E10015-X[d,e]	Low-hydrogen sodium	F,V,OH,H	DCEP
E10016-X[d,e]	Low-hydrogen potassium	F,V,OH,H	ac or DCEP
E10018-X[d,e]	Low-hydrogen potassium, iron powder	F,V,OH,H	ac or DCEP
E10018M[d,e]	Iron-powder, low hydrogen	F,V,OH,H	DCEP
E11010-G	High-cellulose sodium	F,V,OH,H	DCEP
E11011-G	High-cellulose potassium	F,V,OH,H	ac or DCEP
E11013-G	High-titania potassium	F,V,OH,H	ac, DCEP or DCEN
E11015-G[d,e]	Low-hydrogen sodium	F,V,OH,H	DCEP
E11016-G[d,e]	Low-hydrogen potassium	F,V,OH,H	ac or DCEP
E11018-G[d,e]	Low-hydrogen potassium, iron powder	F,V,OH,H	ac or DCEP
E11018M[d,e]	Iron-powder, low hydrogen	F,V,OH,H	DCEP
E12010-G	High-cellulose sodium	F,V,OH,H	DCEP
E12011-G	High-cellulose potassium	F,V,OH,H	ac or DCEP
E12013-G	High-titania potassium	F,V,OH,H	ac, DCEP or DCEN
E12015-G[d,e]	Low-hydrogen sodium	F,V,OH,H	DCEP
E12016-G[d,e]	Low-hydrogen potassium	F,V,OH,H	ac or DCEP
E12018-G[d,e]	Low-hydrogen potassium, iron powder	F,V,OH,H	ac or DCEP
E12018M[d,e]	Iron-powder, low hydrogen	F,V,OH,H	DCEP
E12018M1[d,e]	Iron-powder, low hydrogen	F,V,OH,H	DCEP

TABLE 1 (CONT'D)
ELECTRODE CLASSIFICATION

NOTES:

a. The letter suffix "X" as used in this table stands for the suffixes A1, B1, B3, etc. (see Table 2) and designates the chemical composition of the weld metal. See A2.2.3 for more information on "G" classification.

b. The abbreviations, F,V,OH,H, and H-fillets indicate the welding position as follows:
F = Flat
H = Horizontal
H-fillets = Horizontal fillets
V = Vertical (For electrodes $^{3}/_{16}$ in. (4.8 mm) and under, except $^{5}/_{32}$ in. (4.0 mm) and under for classifications EXX15-X, EXX16-X, EXX18-X)
OH = Overhead (For electrodes $^{3}/_{16}$ in. (4.8 mm) and under, except $^{5}/_{32}$ in. (4.0 mm) and under for classifications EXX15-X, EXX16-X, EXX18-X).

c. The term "DCEP" refers to direct current, electrode positive (dc, reverse polarity). The term "DCEN" refers to direct current, electrode negative (dc, straight polarity).

d. Electrodes classified as EXX15-X, EXX16-X, EXX18-X, or EXX18M(1) which meet supplemental absorbed moisture requirements in Table 11 may be further identified as shown in Table 11 and Figure 12.

e. Electrodes classified as EXX15-X, EXX16-X, EXX18-X, or EXX18M(1) which produce weld metal that meets the maximum average level of diffusible hydrogen in Table 12 may be further identified as specified in Table 12 and Figure 12.

PART B — TESTS, PROCEDURES, AND REQUIREMENTS

6. Summary of Tests

The tests required for each classification are specified in Table 5. The purpose of these tests is to determine the chemical composition, mechanical properties and soundness of the weld metal, the usability of the electrode, and the moisture content of the low-hydrogen electrode covering. The base metal for the weld test assemblies, the welding and testing procedures to be employed, and the results required are given in Sections 8 through 14.

The supplemental tests for absorbed moisture (see Section 15, Absorbed Moisture Test), and for diffusible hydrogen (see Section 16, Diffusible Hydrogen Test), are not required for classification of the low-hydrogen electrodes (see Note i of Table 5).

7. Retest

If the results of any test fail to meet the requirement, that test shall be repeated twice. The results of both retests shall meet the requirement. Specimens for the retest may be taken from the original test assembly or from a new test assembly. For chemical analysis, retest need be only for those specific elements that failed to meet the test requirement.

8. Weld Test Assemblies

8.1 One or more of the following weld test assemblies are required for classification testing.

(1) The weld pad in Fig. 1 for chemical analysis of the undiluted weld metal.

(2) The groove weld in Fig. 2 for mechanical properties and soundness of the weld metal for all classifications except EXX18M(1).

(3) The fillet weld in Fig. 3 for the usability of the electrode.

(4) The groove weld in Fig. 4, an alternate to (2) above, for mechanical properties and soundness of the weld metal made with the E9018M, E10018M, E11018M, E12018M, or E12018M1 electrode.

The sample for chemical analysis may be taken from the reduced section of the fractured tension test specimen or from a corresponding location (or any location above it) in the weld metal in the groove weld in Figs. 2 or 4. In case of dispute, the weld pad in Fig. 1 shall be the referee method.

8.2 The preparation of each weld test assembly shall be as prescribed in 8.3 through 8.5. The base metal for each assembly shall be as required in Table 6 and shall meet the requirements of the ASTM specification shown there or an equivalent specification. Testing of the assemblies shall be as prescribed in Sections 9 through 13.

Electrodes other than low hydrogen, as defined in Table 1, shall be tested without conditioning. Low-

TABLE 2
CHEMICAL COMPOSITION REQUIREMENTS FOR UNDILUTED WELD METAL

AWS Classification[c]	UNS Number[d]	Wt. Percent[a,b]								Additional Elements	
		C	Mn	Si	P	S	Ni	Cr	Mo	Type	Amt.
Carbon-Molybdenum Steel Electrodes											
E7010-A1	W17010	0.12	0.60	0.40	0.03	0.03	—	—	0.40–0.65	—	—
E7011-A1	W17011	0.12	0.60	0.40	0.03	0.03	—	—	0.40–0.65	—	—
E7015-A1	W17015	0.12	0.90	0.60	0.03	0.03	—	—	0.40–0.65	—	—
E7016-A1	W17016	0.12	0.90	0.60	0.03	0.03	—	—	0.40–0.65	—	—
E7018-A1	W17018	0.12	0.90	0.80	0.03	0.03	—	—	0.40–0.65	—	—
E7020-A1	W17020	0.12	0.60	0.40	0.03	0.03	—	—	0.40–0.65	—	—
E7027-A1	W17027	0.12	1.00	0.40	0.03	0.03	—	—	0.40–0.65	—	—
Chromium-Molybdenum Steel Electrodes											
E8016-B1	W51016	0.05–0.12	0.90	0.60	0.03	0.03	—	0.40–0.65	0.40–0.65	—	—
E8018-B1	W51018	0.05–0.12	0.90	0.80	0.03	0.03	—	0.40–0.65	0.40–0.65	—	—
E8016-B2	W52016	0.05–0.12	0.90	0.60	0.03	0.03	—	1.00–1.50	0.40–0.65	—	—
E8018-B2	W52018	0.05–0.12	0.90	0.80	0.03	0.03	—	1.00–1.50	0.40–0.65	—	—
E7015-B2L	W52115	0.05	0.90	1.00	0.03	0.03	—	1.00–1.50	0.40–0.65	—	—
E7016-B2L	W52116	0.05	0.90	0.60	0.03	0.03	—	1.00–1.50	0.40–0.65	—	—
E7018-B2L	W52118	0.05	0.90	0.80	0.03	0.03	—	1.00–1.50	0.40–0.65	—	—
E9015-B3	W53015	0.05–0.12	0.90	1.00	0.03	0.03	—	2.00–2.50	0.90–1.20	—	—
E9016-B3	W53016	0.05–0.12	0.90	0.60	0.03	0.03	—	2.00–2.50	0.90–1.20	—	—
E9018-B3	W53018	0.05–0.12	0.90	0.80	0.03	0.03	—	2.00–2.50	0.90–1.20	—	—
E8015-B3L	W53115	0.05	0.90	1.00	0.03	0.03	—	2.00–2.50	0.90–1.20	—	—
E8018-B3L	W53118	0.05	0.90	0.80	0.03	0.03	—	2.00–2.50	0.90–1.20	—	—
E8015-B4L	W53415	0.05	0.90	1.00	0.03	0.03	—	1.75–2.25	0.40–0.65	—	—
E8016-B5	W51316	0.07–0.15	0.40–0.70	0.30–0.60	0.03	0.03	—	0.40–0.60	1.00–1.25	V	0.05
E8015-B6[e]	W50215	0.05–0.10	1.0	0.90	0.03	0.03	0.40	4.0–6.0	0.45–0.65	—	—
E8016-B6[e]	W50216	0.05–0.10	1.0	0.90	0.03	0.03	0.40	4.0–6.0	0.45–0.65	—	—
E8018-B6[e]	W50218	0.05–0.10	1.0	0.90	0.03	0.03	0.40	4.0–6.0	0.45–0.65	—	—
E8015-B6L[e]	W50205	0.05	1.0	0.90	0.03	0.03	0.40	4.0–6.0	0.45–0.65	—	—

(continued)

TABLE 2 (CONT'D)
CHEMICAL COMPOSITION REQUIREMENTS FOR UNDILUTED WELD METAL

AWS Classification[c]	UNS Number[d]	Wt. Percent[a,b]								Additional Elements	
		C	Mn	Si	P	S	Ni	Cr	Mo	Type	Amt.
					Chromium-Molybdenum Steel Electrodes (continued)						
E8016-B6L[e]	W50206	0.05	1.0	0.90	0.03	0.03	0.40	4.0–6.0	0.45–0.65	—	—
E8018-B6L[e]	W50208	0.05	1.0	0.90	0.03	0.03	0.40	4.0–6.0	0.45–0.65	—	—
E8015-B7[e]	W50315	0.05–0.10	1.0	0.90	0.03	0.03	0.40	6.0–8.0	0.45–0.65	—	—
E8016-B7[e]	W50316	0.05–0.10	1.0	0.90	0.03	0.03	0.40	6.0–8.0	0.45–0.65	—	—
E8018-B7[e]	W50318	0.05–0.10	1.0	0.90	0.03	0.03	0.40	6.0–8.0	0.45–0.65	—	—
E8015-B7L[e]	W50305	0.05	1.0	0.90	0.03	0.03	0.40	6.0–8.0	0.45–0.65	—	—
E8016-B7L[e]	W50306	0.05	1.0	0.90	0.03	0.03	0.40	6.0–8.0	0.45–0.65	—	—
E8018-B7L[e]	W50308	0.05	1.0	0.90	0.03	0.03	0.40	6.0–8.0	0.45–0.65	—	—
E8015-B8[e]	W50415	0.05–0.10	1.0	0.90	0.03	0.03	0.40	8.0–10.5	0.85–1.20	—	—
E8016-B8[e]	W50416	0.05–0.10	1.0	0.90	0.03	0.03	0.40	8.0–10.5	0.85–1.20	—	—
E8018-B8[e]	W50418	0.05–0.10	1.0	0.90	0.03	0.03	0.40	8.0–10.5	0.85–1.20	—	—
E8015-B8L[e]	W50405	0.05	1.0	0.90	0.03	0.03	0.40	8.0–10.5	0.85–1.20	—	—
E8016-B8L[e]	W50406	0.05	1.0	0.90	0.03	0.03	0.40	8.0–10.5	0.85–1.20	—	—
E8018-B8L[e]	W50408	0.05	1.0	0.90	0.03	0.03	0.40	8.0–10.5	0.85–1.20	—	—
E9015-B9	W50425	0.08–0.13	1.25	0.30	0.01	0.01	1.0	8.0–10.5	0.85–1.20	V	0.15–0.30
										Cu	0.25
										Al	0.04
										Nb(Cb)	0.02–0.10
										N	0.02–0.07
E9016-B9	W50426	0.08–0.13	1.25	0.30	0.01	0.01	1.0	8.0–10.5	0.85–1.20	V	0.15–0.30
										Cu	0.25
										Al	0.04
										Nb(Cb)	0.02–0.10
										N	0.02–0.07
E9018-B9	W50428	0.08–0.13	1.25	0.30	0.01	0.01	1.0	8.0–10.5	0.85–1.20	V	0.15–0.30
										Cu	0.25
										Al	0.04
										Nb(Cb)	0.02–0.10
										N	0.02–0.07

(continued)

TABLE 2 (CONT'D)
CHEMICAL COMPOSITION REQUIREMENTS FOR UNDILUTED WELD METAL

AWS Classification[c]	UNS Number[d]	Wt. Percent[a,b]								Additional Elements	
		C	Mn	Si	P	S	Ni	Cr	Mo	Type	Amt.
					Nickel Steel Electrodes						
E8016-C1	W22016	0.12	1.25	0.60	0.03	0.03	2.00–2.75	—	—	—	—
E8018-C1	W22018	0.12	1.25	0.80	0.03	0.03	2.00–2.75	—	—	—	—
E7015-C1L	W22115	0.05	1.25	0.50	0.03	0.03	2.00–2.75	—	—	—	—
E7016-C1L	W22116	0.05	1.25	0.50	0.03	0.03	2.00–2.75	—	—	—	—
E7018-C1L	W22118	0.05	1.25	0.50	0.03	0.03	2.00–2.75	—	—	—	—
E8016-C2	W23016	0.12	1.25	0.60	0.03	0.03	3.00–3.75	—	—	—	—
E8018-C2	W23018	0.12	1.25	0.80	0.03	0.03	3.00–3.75	—	—	—	—
E7015-C2L	W23115	0.05	1.25	0.50	0.03	0.03	3.00–3.75	—	—	—	—
E7016-C2L	W23116	0.05	1.25	0.50	0.03	0.03	3.00–3.75	—	—	—	—
E7018-C2L	W23118	0.05	1.25	0.50	0.03	0.03	3.00–3.75	—	—	—	—
E8016-C3	W21016	0.12	0.40–1.25	0.80	0.03	0.03	0.80–1.10	0.15	0.35	V	0.05
E8018-C3[l]	W21018	0.12	0.40–1.25	0.80	0.03	0.03	0.80–1.10	0.15	0.35	V	0.05
E7018-C3L	W20918	0.08	0.40–1.40	0.50	0.03	0.03	0.80–1.10	0.15	0.35	V	0.05
E8016-C4	W21916	0.10	1.25	0.60	0.03	0.03	1.10–2.00	—	—	—	—
E8018-C4	W21918	0.10	1.25	0.80	0.03	0.03	1.10–2.00	—	—	—	—
E9015-C5L	W25018	0.05	0.40–1.00	0.50	0.03	0.03	6.00–7.25	—	—	—	—
					Nickel-Molybdenum Steel Electrodes						
E8018-NM1	W21118	0.10	0.80–1.25	0.60	0.02	0.02	0.80–1.10	0.10	0.40–0.65	V Cu Al	0.02 0.10 0.05
					Manganese-Molybdenum Steel Electrodes						
E8018-D1	W18118	0.12	1.00–1.75	0.80	0.03	0.03	0.90	—	0.25–0.45	—	—
E9015-D1	W19015	0.12	1.00–1.75	0.60	0.03	0.03	0.90	—	0.25–0.45	—	—
E9018-D1	W19018	0.12	1.00–1.75	0.80	0.03	0.03	0.90	—	0.25–0.45	—	—

(continued)

TABLE 2 (CONT'D)
CHEMICAL COMPOSITION REQUIREMENTS FOR UNDILUTED WELD METAL

AWS Classification[c]	UNS Number[d]	Wt. Percent[a,b]								Additional Elements	
		C	Mn	Si	P	S	Ni	Cr	Mo	Type	Amt.
E10015-D2	W10015	0.15	1.65–2.00	0.60	0.03	0.03	0.90	—	0.25–0.45	—	—
E10016-D2	W10016	0.15	1.65–2.00	0.60	0.03	0.03	0.90	—	0.25–0.45	—	—
E10018-D2	W10018	0.15	1.65–2.00	0.80	0.03	0.03	0.90	—	0.25–0.45	—	—
E8016-D3	W18016	0.12	1.00–1.80	0.60	0.03	0.03	0.90	—	0.40–0.65	—	—
E8018-D3	W18018	0.12	1.00–1.80	0.80	0.03	0.03	0.90	—	0.40–0.65	—	—
E9018-D3	W19118	0.12	1.00–1.80	0.80	0.03	0.03	0.90	—	0.40–0.65	—	—
General Low-Alloy Steel Electrodes											
EXX10-G[g]	—	—	1.00[h] min	0.80[h] min	—	—	0.50[h] min	0.30[h] min	0.20[h] min	V	0.10[h] min
										Cu	0.20[h] min
EXX11-G[g]	—	—	1.00[h] min	0.80[h] min	—	—	0.50[h] min	0.30[h] min	0.20[h] min	V	0.10[h] min
										Cu	0.20[h] min
EXX13-G[f]	—	—	1.00[h] min	0.80[h] min	—	—	0.50[h] min	0.30[h] min	0.20[h] min	V	0.10[h] min
										Cu	0.20[h] min
EXX15-G[g]	—	—	1.00[h] min	0.80[h] min	—	—	0.50[h] min	0.30[h] min	0.20[h] min	V	0.10[h] min
										Cu	0.20[h] min
EXX16-G[g]	—	—	1.00[h] min	0.80[h] min	—	—	0.50[h] min	0.30[h] min	0.20[h] min	V	0.10[h] min
										Cu	0.20[h] min
EXX18-G[g]	—	—	1.00[h] min	0.80[h] min	—	—	0.50[h] min	0.30[h] min	0.20[h] min	V	0.10[h] min
										Cu	0.20[h] min
E7020-G	—	—	1.00[h] min	0.80[h] min	—	—	0.50[h] min	0.30[h] min	0.20[h] min	V	0.10[h] min
										Cu	0.20[h] min
E7027-G	—	—	1.00[h] min	0.80[h] min	—	—	0.50[h] min	0.30[h] min	0.20[h] min	V	0.10[h] min
										Cu	0.20[h] min
Military-Similar Electrodes											
E9018M[i]	W21218	0.10	0.60–1.25	0.80	0.030	0.030	1.40–1.80	0.15	0.35	V	0.05
E10018M[i]	W21318	0.10	0.75–1.70	0.60	0.030	0.030	1.40–2.10	0.35	0.25–0.50	V	0.05
E11018M[i]	W21418	0.10	1.30–1.80	0.60	0.030	0.030	1.25–2.50	0.40	0.25–0.50	V	0.05
E12018M[i]	W22218	0.10	1.30–2.25	0.60	0.030	0.030	1.75–2.50	0.30–1.50	0.30–0.55	V	0.05
E12018M1[i]	W23218	0.10	0.80–1.60	0.65	0.015	0.012	3.00–3.80	0.65	0.20–0.30	V	0.05

(continued)

TABLE 2 (CONT'D)
CHEMICAL COMPOSITION REQUIREMENTS FOR UNDILUTED WELD METAL

AWS Classification[c]	UNS Number[d]	Wt. Percent[a,b]								Additional Elements	
		C	Mn	Si	P	S	Ni	Cr	Mo	Type	Amt.
					Pipeline Electrodes						
E7010-P1	W17110	0.20	1.20	0.60	0.03	0.03	1.00	0.30	0.50	V	0.10
E8010-P1	W18110	0.20	1.20	0.60	0.03	0.03	1.00	0.30	0.50	V	0.10
					Weathering Steel Electrodes						
E7018-W1[j]	W20018	0.12	0.40–0.70	0.40–0.70	0.025	0.025	0.20–0.40	0.15–0.30	—	V	0.08
										Cu	0.30–0.60
E8018-W2[j]	W20118	0.12	0.50–1.30	0.35–0.80	0.03	0.03	0.40–0.80	0.45–0.70	—	Cu	0.30–0.75

NOTES:
a. Single values are maximum, except where specified otherwise.
b. Weld metal shall be analyzed for those elements for which specific values are shown. Other elements listed without specified values shall be reported, if intentionally added. The total of these latter unspecified elements and all other elements not intentionally added shall not exceed 0.50%.
c. The suffixes A1, B3, C3, etc. designate the chemical composition of the electrode classification.
d. SAE/ASTM Unified Numbering System for Metals and Alloys.
e. The E8015-B6 and E8015-B6L electrodes were formerly classified as E502-15 in AWS A5.4-81, *Specification for Covered Corrosion-Resisting Chromium and Chromium Nickel Steel Welding Electrodes*. The E8016-B6 and E8016-B6L were formerly classified as E502-16 in A5.4-81. The E8018-B6 and E8018-B6L were not formerly classified but were produced to the E502 composition ranges in A5.4-81 but with the EXX18 covering of this specification. Similarly, the E80XX-B7(L) classifications were formerly classified as E7Cr-XX in A5.4-81; and the E80XX-B8(L) classifications were formerly classified as E505-XX in A5.4-81.
f. The letters "XX" used in the classification designation for EXX13-G in this table stand for various tensile-strength levels (80, 90, 100, 110, and 120 ksi) of weld metal.
g. The letters "XX" used in the classification designations for all electrodes except EXX13-G in this table stand for the various tensile-strength levels (70, 80, 90, 100, 110, and 120 ksi) of electrodes.
h. In order to meet the alloy requirements of the "G" group, the undiluted weld metal shall have the minimum of at least one of the elements listed in this table. Additional chemical requirements may be agreed to between supplier and purchaser.
i. These classifications are intended to be similar to types of electrodes covered by MIL-E-22200/1 and MIL-E-22200/10.
j. In AWS A5.5-81, E7018-W1 was designated E7018-W, and E8018-W2 was designated E8018-W.

TABLE 3
TENSION TEST REQUIREMENTS[a,b]

AWS Classification[c]	Tensile Strength		Yield Strength, at 0.2% Offset		Elongation Percent	Postweld Condition[d]
	ksi	MPa	ksi	MPa		
E7010-P1	70	480	60	415	22	AW
E7010-A1	70	480	57	390	22	PWHT
E7010-G	70	480	57	390	22	AW or PWHT
E7011-A1	70	480	57	390	22	PWHT
E7011-G	70	480	57	390	22	AW or PWHT
E7015-X	70	480	57	390	25	PWHT
E7015-B2L	75	520	57	390	19	PWHT
E7015-G	70	480	57	390	25	AW or PWHT
E7016-X	70	480	57	390	25	PWHT
E7016-B2L	75	520	57	390	19	PWHT
E7016-G	70	480	57	390	25	AW or PWHT
E7018-X	70	480	57	390	25	PWHT
E7018-B2L	75	520	57	390	19	PWHT
E7018-C3L	70	480	57	390	25	AW
E7018-W1	70	480	60	415	25	AW
E7018-G	70	480	57	390	25	AW or PWHT
E7020-A1	70	480	57	390	25	PWHT
E7020-G	70	480	57	390	25	AW or PWHT
E7027-A1	70	480	57	390	25	PWHT
E7027-G	70	480	57	390	25	AW or PWHT
E8010-P1	80	550	67	460	19	AW
E8010-G	80	550	67	460	19	AW or PWHT
E8011-G	80	550	67	460	19	AW or PWHT
E8013-G	80	550	67	460	16	AW or PWHT
E8015-X	80	550	67	460	19	PWHT
E8015-B3L	80	550	67	460	17	PWHT
E8015-G	80	550	67	460	19	AW or PWHT
E8016-X	80	550	67	460	19	PWHT
E8016-C3	80	550	68 to 80[e]	470 to 550[e]	24	AW
E8016-C4	80	550	67	460	19	AW
E8016-G	80	550	67	460	19	AW or PWHT
E8018-X	80	550	67	460	19	PWHT
E8018-B3L	80	550	67	460	17	PWHT
E8018-C3	80	550	68 to 80[e]	470 to 550[e]	24	AW
E8018-C4	80	550	67	460	19	AW
E8018-NM1	80	550	67	460	19	AW
E8018-W2	80	550	67	460	19	AW
E8018-G	80	550	67	460	19	AW or PWHT
E9010-G	90	620	77	530	17	AW or PWHT
E9011-G	90	620	77	530	17	AW or PWHT
E9013-G	90	620	77	530	14	AW or PWHT
E9015-X	90	620	77	530	17	PWHT
E9015-G	90	620	77	530	17	AW or PWHT
E9016-X	90	620	77	530	17	PWHT
E9016-G	90	620	77	530	17	AW or PWHT
E9018M	90	620	78 to 90[e]	540 to 620[e]	24	AW
E9018-X	90	620	77	530	17	PWHT
E9018-G	90	620	77	530	17	AW or PWHT

TABLE 3 (CONT'D)
TENSION TEST REQUIREMENTS[a,b]

AWS Classification[c]	Tensile Strength ksi	Tensile Strength MPa	Yield Strength, at 0.2% Offset ksi	Yield Strength, at 0.2% Offset MPa	Elongation Percent	Postweld Condition[d]
E10010-G	100	690	87	600	16	AW or PWHT
E10011-G	100	690	87	600	16	AW or PWHT
E10013-G	100	690	87	600	13	AW or PWHT
E10015-X	100	690	87	600	16	PWHT
E10015-G	100	690	87	600	16	AW or PWHT
E10016-X	100	690	87	600	16	PWHT
E10016-G	100	690	87	600	16	AW or PWHT
E10018M	100	690	88 to 100	610 to 690[e]	20	AW
E10018-X	100	690	87	600	16	PWHT
E10018-G	100	690	87	600	16	AW or PWHT
E11010-G	110	760	97	670	15	AW or PWHT
E11011-G	110	760	97	670	15	AW or PWHT
E11013-G	110	760	97	670	13	AW or PWHT
E11015-G	110	760	97	670	15	AW or PWHT
E11016-G	110	760	97	670	15	AW or PWHT
E11018-G	110	760	97	670	15	AW or PWHT
E11018M	110	760	98 to 110	680 to 760[e]	20	AW
E12010-G	120	830	107	740	14	AW or PWHT
E12011-G	120	830	107	740	14	AW or PWHT
E12013-G	120	830	107	740	11	AW or PWHT
E12015-G	120	830	107	740	14	AW or PWHT
E12016-G	120	830	107	740	14	AW or PWHT
E12018-G	120	830	107	740	14	AW or PWHT
E12018M	120	830	108 to 120	745 to 830[e]	18	AW
E12018M1	120	830	108 to 120	745 to 830[e]	18	AW

NOTES:
a. See Table 5 for sizes to be tested.
b. Single values are minimum, except as otherwise specified.
c. The letter suffix "X" as used in this table represents the suffixes (A1, B1, B2, etc.) except for those classifications which are tested in the as-welded condition.
d. "AW" signifies as-welded with aging when it is specified in 11.2, "PWHT" signifies postweld heat treated as specified in 8.4.2 and in Table 7, except that the "G" designated classifications, marked as "AW or PWHT" in this table, may have weld metal tested with or without PWHT as agreed between the supplier and purchaser.
e. For $^{3}/_{32}$ in. (2.4 mm) electrodes, the upper value for the yield strength may be 5 ksi (35 MPa) higher than the indicated value.

hydrogen electrodes, that have not been adequately protected against moisture absorption in storage, shall be held at a temperature of 500° to 800°F (260° to 427°C) for a minimum of one hour prior to testing.

8.3 Weld Pad. A weld pad, when required, shall be prepared as specified in Fig. 1. Base metal of any convenient size of the type specified in Table 6 shall be used as the base for the weld pad. The surface of the base metal on which the filler metal is deposited shall be clean. The pad shall be welded in the flat position with multiple layers to obtain undiluted weld metal. The preheat temperature shall not be less than 60°F (16°C) and the interpass temperature shall not exceed 300°F (150°C). Each weld pass shall be a single straight pass with the pass width not exceeding $2^{1}/_{2}$ times the diameter of the core wire. The slag shall be removed after each pass. The pad may be quenched in water between passes. The dimensions of the completed pad shall be as shown in Fig. 1. Testing of this assembly shall be as specified in Section 9, Chemical Analysis.

8.4 Groove Weld

8.4.1 Mechanical Properties and Soundness. A test assembly shall be prepared and welded as specified in Fig. 2 or 4 using base metal of the appropriate type specified in Table 6, of thickness specified in Fig. 2 or 4. Testing of this assembly shall be as specified in

TABLE 4
CHARPY V-NOTCH IMPACT REQUIREMENTS

AWS Classification	Limits for 3 out of 5 Specimens[c]	
	Average, min.[b]	Single Value, min.[b]
E7018-W1 E8018-W2	20 ft·lbf at 0°F (27J at −18°C)	15 ft·lbf at 0°F (20J at −18°C)
E12018M1	50 ft·lbf at 0°F (67J at −18°C)	40 ft·lbf at 0°F (54J at −18°C)
E7010-P1 E8010-P1	20 ft·lbf at −20°F (27J at −29°C)	15 ft·lbf at −20°F (20J at −29°C)
E8018-NM1 E8016-C3 E8018-C3	20 ft·lbf at −40°F (27J at −40°C)	15 ft·lbf at −40°F (20J at −40°C)
E8016-D3, E8018-D1 E8018-D3, E9015-D1 E9018-D1, E9018-D3 E10015-D2, E10016-D2 E10018-D2	20 ft·lbf at −60°F[a] (27J at −51°C)	15 ft·lbf at −60°F[a] (20J at −51°C)
E7018-C3L E8016-C4, E8018-Cr E9018M, E10018M E11018M, E12018M	20 ft·lbf at −60°F (27J at −51°C)	15 ft·lbf at −60°F) (20J at −51°C)
E8016-C1 E8018-C1	20 ft·lbf at −75°F[a] (27J at −59°C)	15 ft·lbf at −75°F[a] (20J at −59°C)
E7015-C1L E7016-C1L E7018-C1L E8016-C2 E8018-C2	20 ft·lbf at −100°F[a] (27J at −73°C)	15 ft·lbf at 100°F[a] (20J at −73°C)
E7015-C2L E7016-C2L E7018-C2L	20 ft·lbf at −150°F[a] (27J at −101°C)	15 ft·lbf at −150°F[a] (20J at −101°C)
E9015-C5L	20 ft·lbf at −175°F[a] (27J at −115°C)	15 ft·lbf at −175°F[a] (20J at −115°C)
EXXXX-A1 EXXXX-BX EXXXX-BXL EXXXX-G	Not specified	

NOTES:

a. These classifications are tested in the postweld heat treated condition. No thermal treatment shall be performed on the test specimens of all other classifications.

b. Impact test values shall be recorded to "nearest whole unit" of energy absorbed in foot-pounds in accordance with the rounding-off method specified in 5.2.

c. Both the highest and the lowest test values obtained shall be disregarded in computing the average value. Two of these three remaining values shall equal or exceed the minimum average value listed; one of these three remaining values may be lower than minimum average value, but shall not be less than the minimum single value listed. The average of the three remaining values shall not be less than the minimum average value listed.

TABLE 5
REQUIRED TESTS[a,b]

AWS Classification[a]	Type of Current[a]	Electrode Size[c]		Welding Position for Test Assembly				
		in.	mm	Chemical Analysis[d]	Soundness Test All Weld Metal Tension Test[e,f]	Impact Test[g]	Fillet Weld Test[h]	Moisture Test[j]
E7010-X E8010-X E9010-G E10010-G E11010-G E12010-G	DCEP	3/32, 1/8 5/32 3/16 7/32 1/4	2.4, 3.2 4.0 4.8 5.6 6.4	NR[b] F NR[b] NR[b] F	NR[b] F F NR[b] F	NR NR NR NR NR	NR[b] V,OH V,OH NR[b] H	NR NR NR NR NR
E7011-X E8011-X E9011-G E10011-G E11011-G E12011-G	ac and DCEP	3/32, 1/8 5/32 3/16 7/32 1/4	2.4, 3.2 4.0 4.8 5.6 6.4	NR[b] F NR[b] NR[b] F	NR[b] F F NR[b] F	NR NR NR NR NR	NR[b] V,OH V,OH NR[b] H	NR NR NR NR NR
E8013-G E9013-G E10013-G E11013-G E12013-G	ac, DCEN, and DCEP	3/32, 1/8 5/32 3/16	2.4, 3.2 4.0 4.8	NR[b] F[j] NR[b]	NR[b] F[j] F[j]	NR NR NR	NR[b] V,OH V,OH	NR NR NR
E7015-X E8015-X E9015-X E11015-X E11015-G E12015-G	DCEP	3/32, 1/8 5/32 3/16 7/32 1/4	2.4, 3.2 4.0 4.8 5.6 6.4	NR[b] F NR[b] NR[b] F	NR[b] F F NR[b] F	NR[b] F F NR[b] F	NR[b] V,OH H NR[b] H	NR[b] Req'd. NR[b] NR[b] Req'd.
E7016-X E8016-X E9016-X E10016-X E11016-G E12016-G	ac and DCEP	3/32, 1/8 5/32 3/16 7/32 1/4	2.4, 3.2 4.0 4.8 5.6 6.4	NR[b] F NR[b] NR[b] F	NR[b] F F NR[b] F	NR[b] F F NR[b] F	NR[b] V,OH H NR[b] H	NR[b] Req'd. NR[b] NR[b] Req'd.
E7018-X E8018-X E9018-X E10018-X E11015-G E12018-G	ac and DCEP	3/32, 1/8 5/32 3/16 7/32 1/4	2.4,3.2 4.0 4.8 5.6 6.4	NR[b] F NR[b] NR[b] F	NR[b] F F NR[b] F	NR[b] F F NR[b] F	NR[b] V,OH H NR[b] H	NR[b] Req'd. NR[b] NR[b] Req'd.
E7020-X E7027-X	For H-fillets, ac and DCEN For flat position, ac, DCEN and DCEP	1/8 5/32 3/16 7/32 1/4 5/16	3.2 4.0 4.8 5.6 6.4 8.0	NR[b] F[j] NR[b] NR[b] F[j] NR[b]	NR[b] F[j] F[j] NR[b,k] F[j,k] F[j,k]	NR NR NR NR NR NR	NR[b] H H NR[b] H NR[b]	NR NR NR NR NR NR

TABLE 5 (CONT'D)
REQUIRED TESTS[a,b]

AWS Classification[a]	Type of Current[a]	Electrode Size[c] in.	Electrode Size[c] mm	Welding Position for Test Assembly: Chemical Analysis[d]	Soundness Test All Weld Metal Tension Test[e,f]	Impact Test[g]	Fillet Weld Test[h]	Moisture Test[i]
E9018M	DCEP	3/32, 1/8	2.4, 3.2	NR[b]	NR[b]	NR[b]	NR[b]	NR[b]
E10018M		5/32	4.0	F	F	F	V,OH	Req'd.
E11018M		3/16	4.8	NR[b]	F	F	H	NR[b]
E12018M		7/32	5.6	NR[b]	NR[b]	NR[b]	NR[b]	NR[b]
E12018M1		1/4	6.4	F	F	F	H	Req'd.

NOTES:
a. NR means "not required". The abbreviations, F, H, H-fillet, V, and OH, are defined in Note b of Table 1. The terms "DCEP" and "DCEN" are defined in Note c of Table 1. The letter suffix "X" as used in this table is defined in Note a of Table 1.
b. Standard electrode sizes not requiring this specific test can be classified, provided at least two other sizes of that classification have passed the tests required for them, or the size to be classified meets specification requirements by having been tested in accordance with Sections 8 through either 13, 14, 15, or 16, depending on the electrode being classified.
c. Electrodes manufactured in sizes not shown shall be tested to the requirement of the nearest standard size. 6.0 mm electrode shall be tested to the requirements of 1/4 in. (6.4 mm) electrode.
d. See Section 9.
e. See Section 10.
f. See Section 11.
g. See Section 12. Impact tests are required for classifications listed in Table 4.
h. See Section 13.
i. The moisture test given in Section 14 is the required test for measurement of moisture content of the covering. The absorbed moisture test, in Section 15, and the diffusible hydrogen test, in Section 16, are supplemental tests required only when their corresponding optional supplemental designators are to be used with the classification designators.
j. When DCEP and DCEN are specified, only DCEN need be tested.
k. Electrodes longer than 18 in. (450 mm) will require a double length test assembly in accordance with Note 2 of Figure 2, to ensure uniformity of the entire electrode.

Sections 10, Radiographic Test; 11, Tension Test; and 12, Impact Test. The assembly shall be tested in the as-welded condition or the postweld heat treated condition as specified in Table 3, except for the E(X)XXYY-G classifications, which shall be tested in the postweld condition agreed to by the purchaser and supplier (see Note a of Table 7).

8.4.2 When required, the weld test assembly shall be postweld heat treated before removal of mechanical test specimens. This postweld heat treatment may be done either before or after the radiographic examination.

8.4.2.1 Temperature of the weld test assembly shall be raised, in a suitable furnace, at the rate of 150° to 500°F (65° to 260°C) per hour until the postweld heat treatment temperature, specified in Table 7 for the electrode classification, is attained. Temperature shall be maintained for one hour.

8.4.2.2 The weld test assembly shall then be cooled in the furnace at a maximum rate of 350°F (177°C) per hour. The test assembly may be removed from the furnace when the temperature has reached 600°F (316°C) and allowed to cool in still air.

8.5 Fillet Weld. A weld test assembly shall be prepared for particular sizes of electrodes of all classifications and welded as specified in Table 5 and Fig. 3 using base metal of the appropriate type specified in Table 6. The welding positions and conditions shall be as specified in Table 8 and Fig. 5 according to the size and classification of electrode. Testing of the assembly shall be as specified in Section 13, Fillet Weld Test.

9. Chemical Analysis

9.1 The sample for chemical analysis shall be taken from weld metal obtained with the electrode. The sample shall be taken from a weld pad, or the reduced section of the fractured tension test specimen or from a corresponding location (or any location above it) in the weld metal in the groove weld in Figs. 2 or 4. Areas where arc starts or craters exist shall be avoided.

The top surface of the pad described in 8.3 and shown in Fig. 1 shall be removed and discarded and a sample for analysis shall be obtained from the underlying metal by any appropriate mechanical means. The

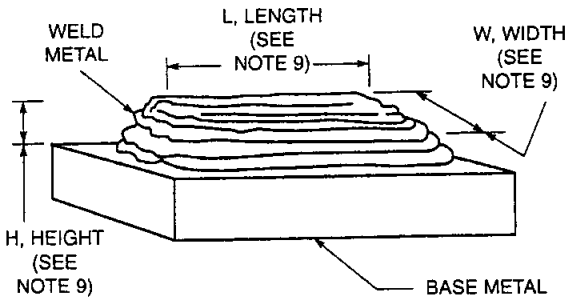

Notes:
1. Base metal of any convenient size, of any type specified in Table 6, shall be used as the base for the weld pad.
2. The surface of the base metal on which the filler metal is to be deposited shall be clean.
3. The pad shall be welded in the flat position with successive layers to obtain undiluted weld metal.
4. One pad shall be welded for each type of current shown in Table 5 except for those classifications identified by note j in Table 5.
5. The number and size of the beads will vary according to the size of the electrode and the width of the weave, as well as the amperage employed. The width of each weld pass in each weld layer shall be no more than 2-1/2 times the diameter of the core wire.
6. The preheat temperature shall not be less than 60°F (16°C) and the interpass temperature shall not exceed 300°F (150°C).
7. The slag shall be removed after each pass.
8. The test assembly may be quenched in water between passes to control interpass temperature.
9. The minimum completed pad size shall be at least four layers in height (H) with length (L) and width (W) sufficient to perform analysis. The sample for analysis shall be taken from weld metal that is at least the following distance above the original base metal surface:

Electrode Size		Minimum Distance From Surface of Base Plates	
in.	mm	in.	mm
3/32	2.4	1/4	6.4
1/8 5/32 3/16	3.2 4.0 4.8	5/16	8.0
7/32 1/4 5/16	5.6 6.4 8.0	3/8	9.5

FIG. 1 PAD FOR CHEMICAL ANALYSIS OF UNDILUTED WELD METAL

sample shall be free of slag and shall be taken from metal that is at least the minimum distance from the original base metal surface as specified in Fig. 1.

The sample from the reduced section of the fractured tension test specimen or from a corresponding location (or any location above it) in the groove weld in Figs. 2 or 4 shall be prepared for analysis by any suitable mechanical means.

9.2 The sample described in 9.1 shall be analyzed by accepted analytical methods. The referee method shall be ASTM E350, *Method for Chemical Analysis of Carbon Steel, Low Alloy Steel, Silicon Electrical Steel, Ingot Iron and Wrought Iron.*

9.3 The results of the chemical analysis shall meet the requirements of Table 2 for the classification of the electrode under test.

10. Radiographic Test

10.1 The groove weld described in 8.4.1 and shown in Fig. 2 or 4 shall be radiographed to evaluate the soundness of the weld metal for all classifications as specified in Table 5. In preparation for radiography, the backing shall be removed and both surfaces of the weld shall be machined or ground smooth. The finished surface of the weld may be flush with the plate or have a reasonably uniform reinforcement not exceeding $^{3}/_{32}$ in. (2.4 mm). Both surfaces of the test assembly shall be smooth enough to avoid difficulty in interpreting the radiograph.

10.2 The weld shall be radiographed in accordance with ASTM E142, *Method for Controlling Quality of Radiographic Testing.* The quality level of inspection shall be 2-2T.

10.3 The soundness of the weld metal meets the requirements of this specification if the radiograph shows:

(1) no cracks or incomplete fusion.

(2) no slag inclusions longer than $^{1}/_{4}$ in. (6 mm) or $^{1}/_{3}$ of the thickness of the weld, whichever is greater, or no groups of slag inclusions in line that have an aggregate length greater than the thickness of the weld in a length 12 times the thickness of the weld except when the distance between the successive inclusions exceeds 6 times the length of the longest inclusion in the group.

(3) no rounded indications in excess of those permitted by the radiographic standards in Fig. 6 according to the grade specified in Table 9.

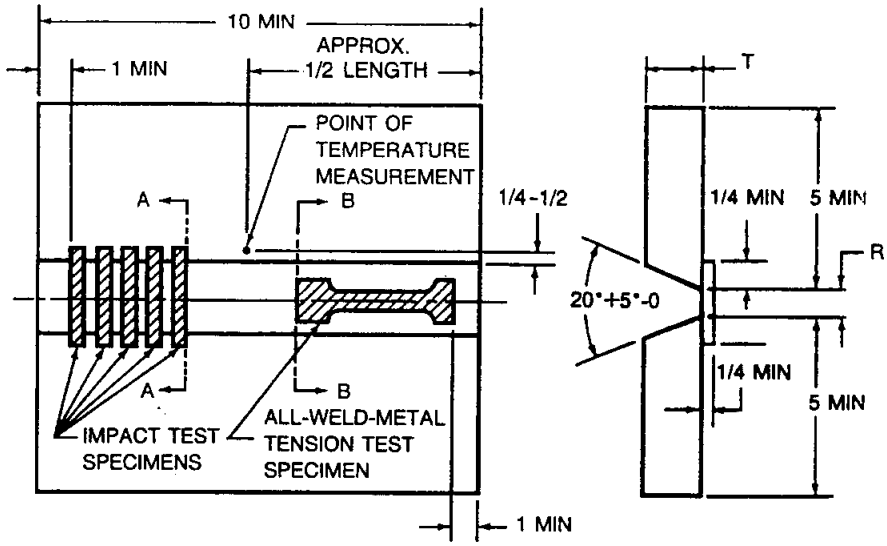

(A) TEST PLATE SHOWING LOCATION OF TEST SPECIMENS

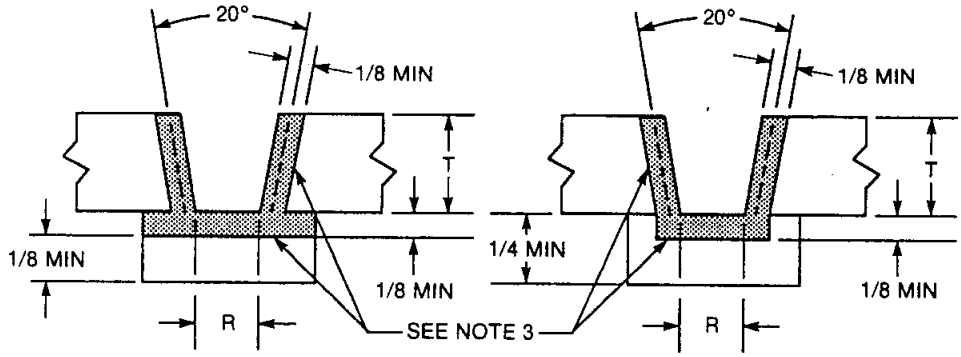

(B) GROOVE PREPARATION OF TEST PLATE

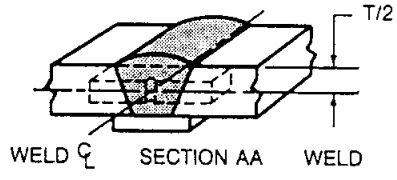

(C) ORIENTATION AND LOCATION OF IMPACT TEST SPECIMEN

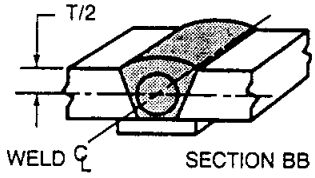

(D) LOCATION OF ALL-WELD-METAL TENSION TEST SPECIMEN

SI EQUIVALENTS

in.	mm
1/8	3.2
1/4	6.4
1/2	13
1	25
5	125
10	250

FIG. 2 GROOVE WELD TEST ASSEMBLY FOR MECHANICAL PROPERTIES AND SOUNDNESS OF WELD METAL PRODUCED BY USING ALL ELECTRODE CLASSIFICATIONS EXCEPT EXX18M(1)

Electrode Size		(T) Plate Thickness		(R) Root Opening		Passes Per Layer	Total Layers
in.	mm	in.	mm	in.	mm		
3/32	2.4	1/2	13	3/8	10	2	not specified
1/8	3.2	1/2	13	1/2	13	2	5 to 7
5/32	4.0	3/4	19	5/8	16	2	7 to 9
3/16	4.8	3/4	19	3/4	19	2	6 to 8
7/32	5.6	3/4	19	7/8	23	2	6 to 8
1/4	6.4	1	25	1	25	2	9 to 11
5/16	8.0	1-1/4	32	1-1/8	28	2	10 to 12

Notes:
1. All dimensions except angles are in inches.
2. For electrodes longer than 18 in. (450 mm), a 20 in. (500 mm) long test assembly shall be welded.
3. Base metal shall be as specified in Table 6. Edges of the grooves and the contacting face of the backing shall be surfaced as shown by any size of the electrode being tested before welding the joint.
4. The surfaces to be welded shall be clean.
5. Prior to welding, the assembly may be preset to yield a welded joint sufficiently flat to facilitate removal of the test specimens. As an alternative, restraint or a combination of restraint and presetting may be used to keep the welded joint within 5 degrees of plane. A test assembly that is more than 5 degrees out of plane shall be discarded. Straightening of the test assembly is prohibited.
6. Welding shall be in the flat position, using each type of current specified in Table 5 except for classifications identified by Note j in Table 5.
7. The preheat and interpass temperature shall be as specified in Table 7 for the classification being tested.
8. For electrode size larger than 1/8 in. (3.2 mm) the joint root may be seal welded with 3/32 or 1/8 in. (2.4 or 3.2 mm) electrodes using stringer beads.
9. In addition to the stops and starts at the ends, each pass shall contain a stop and start in between the ends.
10. The completed weld shall be at least flush with the surface of the test plate.
11. The test assemblies shall be postweld heat treated as specified in Table 7 for the classification being tested.

FIG. 2 GROOVE WELD TEST ASSEMBLY FOR MECHANICAL PROPERTIES AND SOUNDNESS OF WELD METAL PRODUCED BY USING ALL ELECTRODE CLASSIFICATIONS EXCEPT EXX18M(1) (CONT'D)

One inch (25 mm) of the weld measured from each end of the assembly shall be excluded from radiographic examination.

10.4 A rounded indication is an indication (on the radiograph) whose length is no more than three times its width. Rounded indications may be circular, elliptical, conical, or irregular in shape, and they may have tails. The size of a rounded indication is the largest dimension of the indication, including any tail that may be present.

The indication may be porosity or slag. Indications whose largest dimension does not exceed $\frac{1}{64}$ in. (0.4 mm) shall be disregarded. Test assemblies with indications larger than the large indications permitted in the radiographic standards do not meet the requirements of this specification.

11. Tension Test

11.1 One all-weld-metal tension test specimen shall be machined from the groove weld described in 8.4.1 and shown in Fig. 2 or 4. The dimensions of the specimen shall be as shown in Fig. 7.

11.2 The tension specimens for electrodes E7010-G, E7010-P1, E8010-G, E8010-P1, and E9010-G classifications shall be aged at 200° to 220°F (95° to 105°C) for 48 hours plus or minus 2 hours, and cooled in air to room temperature. Other tension test specimens to be tested in the as-welded condition may be aged at 200° to 220°F (95° to 105°C) for up to 48 hours and cooled to room temperature. See A6.3 for a discussion of the purpose of aging treatments. All specimens shall be tested in the manner described in the tension testing section of ANSI/AWS B4.0, *Standard Methods for Mechanical Testing of Welds.*

11.3 Results of the tension test shall meet the requirements specified in Table 3.

12. Impact Test

12.1 Five Charpy V-notch impact specimens, as specified in Fig. 8, shall be machined from the test assembly shown in Fig. 2 or 4 for those classifications for which impact testing is required in Table 5.

12.2 The five specimens shall be tested in accordance with the fracture toughness testing section of ANSI/AWS B4.0, *Standard Methods for Mechanical Testing of Welds.* The test temperature shall be that specified in Table 4 for the classification under test.

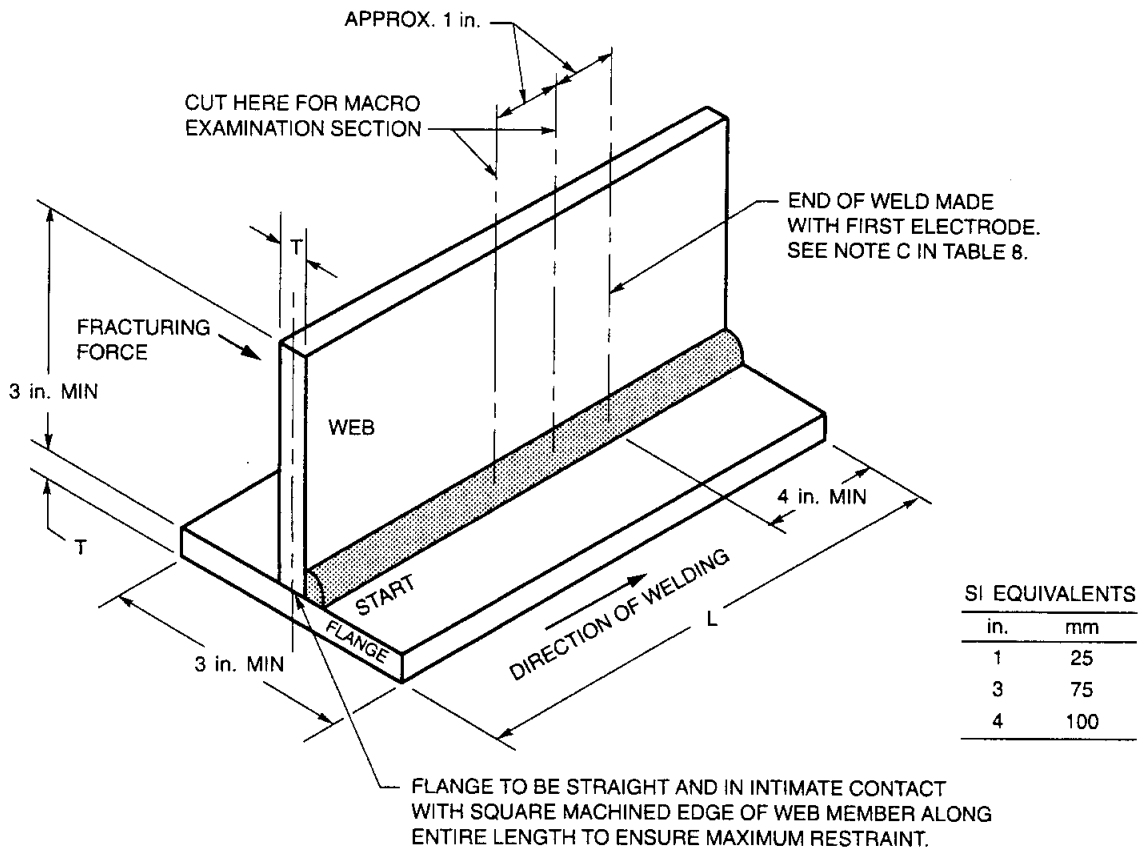

SI EQUIVALENTS

in.	mm
1	25
3	75
4	100

Notes:
1. See Table 8 for values of T and L.
2. Base metal shall be as specified in Table 6.
3. The surfaces to be welded shall be clean.
4. One assembly shall be welded for each position specified in Table 8 and shown in Figure 5 using each type of current and polarity specified in Table 5.
5. The preheat shall be 60°F (16°C) minimum.
6. A single-pass fillet weld shall be made on one side of the joint. The first electrode shall be consumed to a stub length of no greater than 2 in. (50 mm).
7. Welding in the vertical position shall be with upward progression, except for the E7010-X, E8010-X , E9010-X, and E10010-X classifications, where progression may be either upward or downward.
8. Weld cleaning shall be limited to slag chipping, brushing, and needle scaling. Grinding or filing of the weld surface is prohibited.
9. The tests shall be conducted without postweld heat treatment.

FIG. 3 FILLET WELD TEST ASSEMBLY

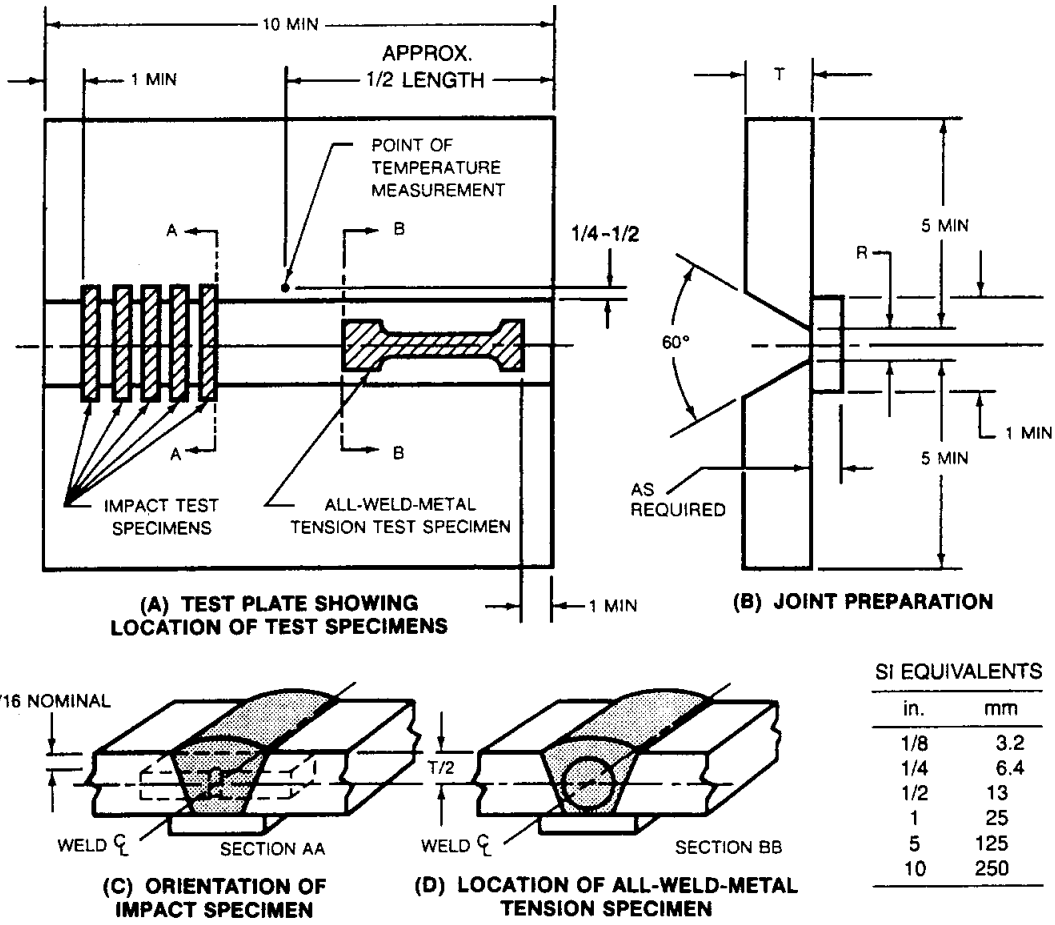

(A) TEST PLATE SHOWING LOCATION OF TEST SPECIMENS

(B) JOINT PREPARATION

(C) ORIENTATION OF IMPACT SPECIMEN

(D) LOCATION OF ALL-WELD-METAL TENSION SPECIMEN

SI EQUIVALENTS

in.	mm
1/8	3.2
1/4	6.4
1/2	13
1	25
5	125
10	250

Electrode Size		(T) Min. Plate Thickness		(R) Max. Root Opening		Number of Layers	
in.	mm	in.	mm	in.	mm	Minimum	Maximum
3/32	2.4	1/2	13	1/4	6.4	See Note 2	
1/8	3.2	1/2	13	1/4	6.4	See Note 2	
5/32	4.0	3/4	19	1/2	13	7	9
3/16	4.8	3/4	19	1/2	13	7	9
7/32	5.6	3/4	19	1/2	13	7	8
1/4	6.4	1	25	1/2	13	9	11

Notes:

1. All dimensions except angles are in inches.
2. Pass and layer sequence shall be reported.
3. Base metal shall be as specified in Table 6.
4. The surfaces to be welded shall be clean.
5. Prior to welding, the assembly may be preset to yield a welded joint sufficiently flat to facilitate removal of the test specimens. As an alternative, restraint or a combination of restraint and presetting may be used to keep the welded joint within 5 degrees of plane. A welded test assembly that is more than 5 degrees out of plane shall be discarded. Straightening of the test assembly is prohibited.
6. Welding shall be performed in the flat position, using the type of current specified in Table 5 for the classification.
7. The preheat and interpass temperature shall be as specified in Table 7 for the classification being tested.
8. Layers should be approximately 1/8 in. thick with each layer being started at the finishing end of the preceding layer.
9. The weld shall be made with stringer beads or with maximum weave no wider than 2-1/2 times the diameter of the core wire.
10. The completed weld shall have a reinforcement of standard proportions, 1/32 in. minimum; 1/8 in. maximum. For electrodes larger than 1/8 in. (3.2 mm), the root beads may be made with 3/32 or 1/8 in. (2.4 or 3.2 mm) electrodes.

FIG. 4 GROOVE WELD TEST ASSEMBLY FOR MECHANICAL PROPERTIES AND SOUNDNESS OF WELD METAL PRODUCED BY USING EXX18M(1)

TABLE 6
BASE METAL FOR WELD TEST ASSEMBLIES

AWS Classification	Base Metals	ASTM Specification	UNS Number*
All except E(X)XXYYM(1)	Carbon Steel	A29 Grade 1015 or equiv.	G10150
All except E(X)XXYYM(1)	Carbon Steel	A29 Grade 1020 or equiv.	G10200
All except E(X)XXYYM(1)	Carbon Steel	A283 Grade D or equiv.	K02702
All except E(X)XXYYM(1)	Carbon Steel	A285 Grade A or equiv.	K01700
All except E(X)XXYYM(1)	Carbon Steel	A285 Grade B or equiv.	K02200
All except E(X)XXYYM(1)	Carbon Steel	A285 Grade C or equiv.	K02801
All	Carbon Steel	A36 or equivalent	K02600
All	Carbon Steel	A131 Grade B or equiv.	K02102

*SAE/ASTM Unified Numbering System for Metals and Alloys

TABLE 7
PREHEAT, INTERPASS, AND POSTWELD HEAT TREATMENT TEMPERATURES

	Preheat and Interpass Temperature		Postweld Heat Treatment Temperature	
AWS Classification	°F	°C	°F	°C
E7010-A1 E7011-A1 E7015-A1 E7016-A1 E7018-A1 E7020-A1 E7027-A1 E8018-D1 E9015-D1 E9018-D1 E10015-D2 E10016-D2 E10018-D2 E8016-D3 E8018-D3 E9018-D3	200 to 225	93 to 107	1150 ± 25	620 ± 14
E8016-B1 E8018-B1 E8015-B2 E8016-B2 E8018-B2 E7015-B2L E7016-B2L E7018-B2L E9015-B3 E9016-B3 E9018-B3 E8015-B3L E8018-B3L E8015-B4L E8016-B5	325 to 375	163 to 191	1275 ± 25	690 ± 14

(continued)

TABLE 7 (CONT'D)
PREHEAT, INTERPASS, AND POSTWELD HEAT TREATMENT TEMPERATURES

AWS Classification	Preheat and Interpass Temperature °F	Preheat and Interpass Temperature °C	Postweld Heat Treatment Temperature °F	Postweld Heat Treatment Temperature °C
E8015-B6 E8016-B6 E8018-B6 E8015-B6L E8016-B6L E8018-B6L E8015-B7 E8016-B7 E8018-B7 E8015-B7L E8016-B7L E8018-B7L	350 to 450	177 to 232	1375 ± 25	740 ± 14
E8015-B8 E8016-B8 E8018-B8 E8015-B8L E8016-B8L E8018-B8L	400 to 500	205 to 260	1375 ± 25	740 ± 14
E9015-B9 E9016-B9 E9018-B9	450 to 550	232 to 288	1375 ± 25	740 ± 14
E8016-C1 E8018-C1 E7015-C1L E7016-C1L E7018-C1L E8016-C2 E8018-C2 E7015-C2L E7016-C2L E7018-C2L	200 to 225	93 to 107	1125 ± 25	605 + 14
E9015-C5L	200 to 250	93 to 121	1075 ± 25	579 ± 14
E8018-G E8011-G E8013-G E9010-G E9011-G E9013-G E10010-G E10011-G E10013-G E11010-G E11011-G E11013-G E12010-G E12011-G E12013-G	325 to 375	163 to 191	See Note a	

TABLE 7 (CONT'D)
PREHEAT, INTERPASS, AND POSTWELD HEAT TREATMENT TEMPERATURES

AWS Classification	Preheat and Interpass Temperature °F	Preheat and Interpass Temperature °C	Postweld Heat Treatment Temperature °F	Postweld Heat Treatment Temperature °C
E7010-G E7011-G E7015-G E7016-G E7018-G E7020-G E7027-G E8015-G E8016-G E8018-G E9015-G E9016-G E9018-G E10015-G E10016-G E10018-G E11015-G E11016-G E11018-G E12015-G E12016-G E12018-G	200 to 225	93 to 107	See Note a	
E7010-P1 E7018-C3L E7018-W1 E8016-C3 E8018-C3 E8016-C4 E8018-C4 E8018-NM1 E8018-W2 E9018M E10018M E11018M E12018M E12018M1	200 to 250	93 to 121	Not specified[b]	
E8018-P1	325 to 375	163 to 191	Not specified[b]	

NOTES:
a. The need and specific values for postweld heat treatment of weld test assemblies made with these "G" electrodes shall be as agreed between supplier and purchaser.
b. Postweld heat treatment is not required for those classifications listed as "as-welded" in Table 3.

TABLE 8
REQUIREMENTS FOR PREPARATION OF FILLET WELD TEST ASSEMBLIES

AWS Classification[a]	Electrode Size in.	Electrode Size mm	Electrode Length in.	Electrode Length mm	Plate Size[b] Thickness (T) in.	Plate Size[b] Thickness (T) mm	Plate Size[b] Length min (L)[c] in.	Plate Size[b] Length min (L)[c] mm	Position of Welding	Size of Fillet Weld in.	Size of Fillet Weld mm
EXX10-X, EXX11-X	3/32	2.4	12	300	1/8	3.2	10	250	V,OH	5/32 max.	4.0
	1/8	3.2	14	350	1/4	6.4	12	300	V,OH	3/16 max.	4.8
	5/32	4.0	14	350	3/8	9.5	12	300	V,OH	1/4 max.	6.4
	3/16	4.8	14	350	3/8	9.5	12	300	V,OH	5/16 max.	8.0
	7/32	5.6	14 or 18	350 or 450	1/2	12.5	12 or 16	300 or 400	H	1/4 min.	6.4
	1/4	6.4	18	450	1/2	12.5	16	400	H	1/4 min.	6.4
EXX13-X	3/32	2.4	12	300	1/8	3.2	10	250	V,OH	5/32 max.	4.0
	1/8	3.2	14	350	1/4	6.4	12	300	V,OH	3/16 max.	4.8
	5/32	4.0	14	350	3/8	9.5	12	300	V,OH	1/4 max.	6.4
	3/16	4.8	14	350	3/8	9.5	12	300	V,OH	3/8 max.	9.5
	7/32	5.6	14 or 18	350 or 450	1/2	12.5	12 or 16	300 or 400	H	1/4 min.	6.4
EXX15-X, EXX16-X, EXX18M, E12018M1, EXX18-X	3/32	2.4	12 or 14	300 or 350	1/8	3.2	10 or 12	250 or 300	V,OH	3/16 max.	4.8
	1/8	3.2	14	350	1/4	6.4	12	300	V,OH	1/4 max.	6.4
	5/32	4.0	14	350	3/8	9.5	12	300	V,OH	5/16 max.	8.0
	3/16	4.8	14	350	3/8	9.5	12	300	H	3/16 min.	4.8
	7/32	5.6	14 or 18	350 or 450	1/2	12.5	12 or 16	300 or 400	H	1/4 min.	6.4
	1/4	6.4	18	450	1/2	12.5	16	400	H	5/16 min.	8.0
E7020-X, E7027-X	1/8	3.2	14	350	1/4	6.4	12	300	H	1/8 min.	3.2
	5/32	4.0	14	350	3/8	9.5	12	300	H	3/16 min.	4.8
	3/16	4.8	14 or 18	350 or 450	3/8	9.5	12 or 16	300 or 400	H	1/4 min.	6.4
	7/32	5.6	18 or 28	450 or 700	1/2	12.5	16 or 26	400 or 650	H	1/4 min.	6.4
	1/4	6.4	18 or 28	450 or 700	1/2	12.5	16 or 26	400 or 650	H	5/16 min.	8.0
	5/16	8.0	18 or 28	450 or 700	1/2	12.5	16 or 26	400 or 650	H	3/8 min.	9.5

NOTES:
a. The letters "XX" used in the classification designations in this table represent the various strength levels (70, 80, 90, 100, 110, and 120 ksi) of the weld metal. The letter suffix "X" as used in this table is defined in Note a of Table 1.
b. See Figure 3.
c. A starting tab, or a longer test assembly shall be used to ensure that the end of the first bead is more than 4 in. (100 mm) from the end of the test assembly.

12.3 In evaluating the results for all the classifications that require impact testing, the lowest and the highest values obtained shall be disregarded. Two of the three remaining values shall equal, or exceed, the minimum average energy level specified in Table 4. One of the three may be lower, but not lower than the minimum single value specified in Table 4. The average of the three shall not be less than the minimum average energy level specified in Table 4.

13. Fillet Weld Test

13.1 The fillet weld test, when required in Table 5, shall be made in accordance with 8.5 and Fig. 3. The entire face of the completed fillet weld shall be examined visually. The test specimen shall be free of cracks, overlap, slag, and porosity, and shall be substantially free of undercut. An infrequent short undercut up to 1/32 in (0.8 mm) in depth shall be allowed. After the visual examination, a specimen, approximately 1 in. (25 mm) in length, shall be removed as shown in Fig. 3. One cross-sectional surface of the specimen shall be polished, etched, and then examined as required in 13.2.

13.2 Scribe lines shall be placed on the prepared surface, as shown in Fig. 9, and the fillet weld size, fillet weld leg, and convexity shall be determined to

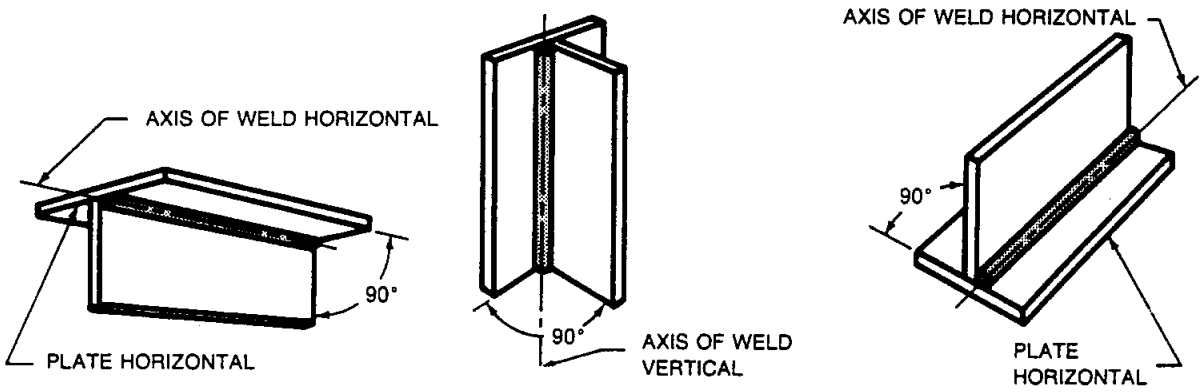

FIG. 5 WELDING POSITIONS FOR FILLET WELD TEST ASSEMBLIES

the nearest $^1/_{64}$ in. (0.4 mm) by actual measurement (see Fig. 9). These measurements shall meet the requirements of Table 8 with respect to minimum or maximum fillet weld size and the requirements of Table 10 with respect to maximum convexity and maximum difference between fillet weld legs according to fillet weld size measured.

13.3 The remaining two sections of the test assembly shall be broken through the fillet weld by a force exerted as shown in Fig. 10. When necessary to facilitate fracture through the fillet weld, one or more of the following procedures may be used:

(1) A reinforcing bead, as shown in Fig. 10, may be added to each leg of the weld.

(2) The position of the web on the flange may be changed, as shown in Fig. 10.

(3) The face of the fillet may be notched, as shown in Fig. 10.

Tests in which the weld metal pulls out of the base metal during bending are invalid tests. Specimens in which this occurs shall be replaced, specimen for specimen, and the test completed. In this case, the doubling of specimens required for retest in Section 7, Retest, does not apply.

13.4 The fractured surfaces shall be visually examined without magnification. The fractured surface shall be free of cracks. Incomplete joint penetration or incomplete fusion at the weld root, in cumulative length, shall not be greater than 20 percent of the total length of the weld. There shall be no continuous length of incomplete joint penetration or incomplete fusion greater than 1 in. (25 mm), as measured along the weld axis, except for electrodes of the E(X)XX13-G classifications. Fillet welds made with electrodes of these classifications may exhibit incomplete joint penetration through the entire weld length, provided that at no point this incomplete joint penetration exceeds 25 percent of the smaller leg of the fillet weld.

14. Moisture Test

14.1 The moisture content of the covering on the low-hydrogen electrodes, when required in Table 5, shall be determined by any suitable method. In case of dispute, the method described in 14.3 through 14.9 shall be the referee method.

14.2 The electrode shall be tested without conditioning unless the manufacturer recommends otherwise. If the electrodes are conditioned, that fact, along with the method used for conditioning, and the time and temperature involved in the conditioning shall be noted on the test record. The moisture content shall not exceed the limit specified in Table 11.

14.3 The referee method for moisture consists of heating a sample of the covering in a nickel or clay boat placed inside a combustion tube in order to remove the moisture from the covering. A stream of oxygen is used to carry the moisture to an absorption tube, where the moisture is collected. The moisture content of the covering is determined by the increase in weight of the absorption tube and is expressed as a percentage of the original weight of the sample of covering.

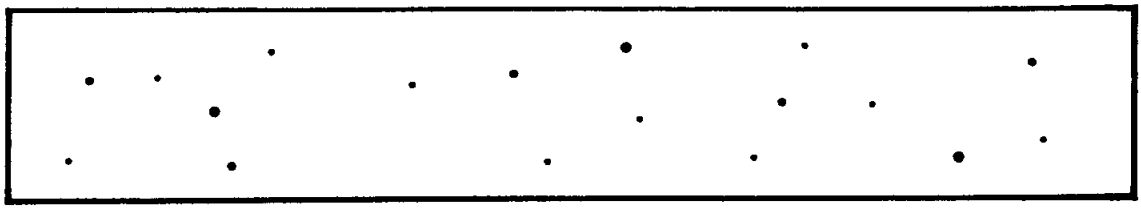

(A) ASSORTED ROUNDED INDICATIONS

SIZE 1/64 in. (0.4 mm) TO 1/16 in. (1.6 mm) IN DIAMETER OR IN LENGTH. MAXIMUM NUMBER OF INDICATIONS IN ANY 6 in. (150 mm) OF WELD = 18, WITH THE FOLLOWING RESTRICTIONS:
MAXIMUM NUMBER OF LARGE 3/64 in. (1.2 mm) TO 1/16 in. (1.6 mm) IN DIAMETER OR IN LENGTH INDICATIONS = 3.
MAXIMUM NUMBER OF MEDIUM 1/32 in. (0.8 mm) TO 3/64 in. (1.2 mm) IN DIAMETER OR IN LENGTH INDICATIONS = 5.
MAXIMUM NUMBER OF SMALL 1/64 in. (0.4 mm) TO 1/32 in. (0.8 mm) IN DIAMETER OR IN LENGTH INDICATIONS = 10.

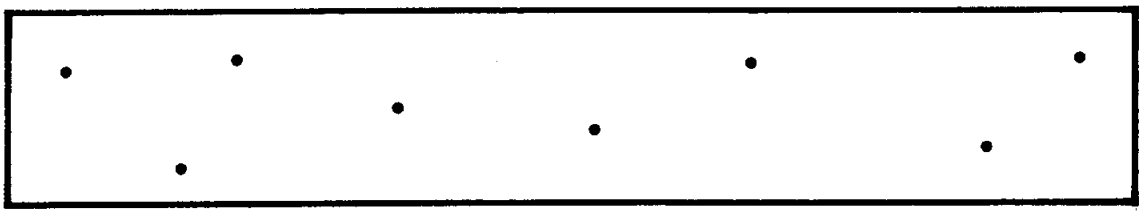

(B) LARGE ROUNDED INDICATIONS

SIZE 3/64 in. (1.2 mm) TO 1/16 in. (1.6 mm) IN DIAMETER OR IN LENGTH.
MAXIMUM NUMBER OF INDICATIONS IN ANY 6 in. (150 mm) OF WELD = 8.

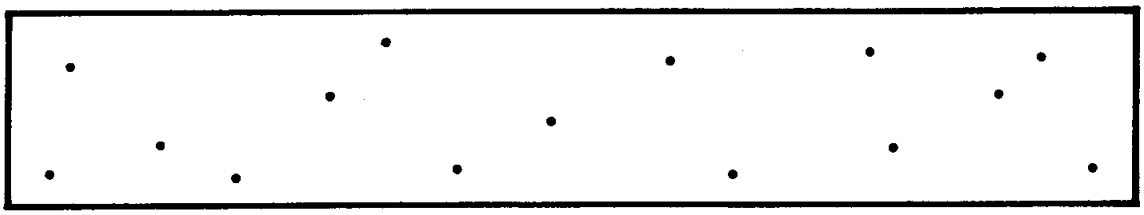

(C) MEDIUM ROUNDED INDICATIONS

SIZE 1/32 in. (0.8 mm) TO 3/64 in. (1.2 mm) IN DIAMETER OR IN LENGTH.
MAXIMUM NUMBER OF INDICATIONS IN ANY 6 in. (150 mm) OF WELD = 15.

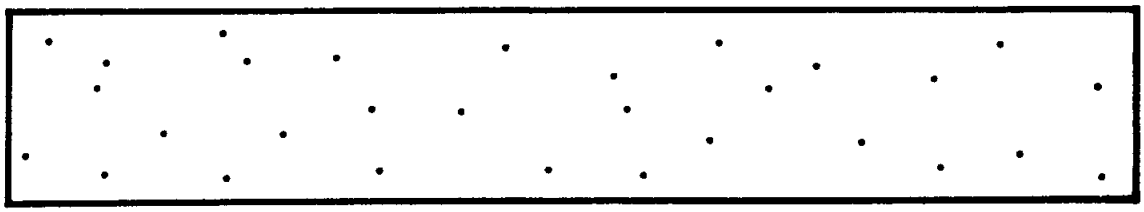

(D) SMALL ROUNDED INDICATIONS

SIZE 1/64 in. (0.4 mm) TO 1/32 in. (0.8 mm) IN DIAMETER OR IN LENGTH.
MAXIMUM NUMBER OF INDICATIONS IN ANY 6 in. (150 mm) OF WELD = 30.

Notes:

1. In using these standards, the chart which is most representative of the size of the rounded indications present in the test specimen radiograph shall be used for determining conformance to these radiographic standards.
2. Since these are test welds specifically made in the laboratory for classification purposes, the radiographic requirements for these test welds are more rigid than those which may be required for general fabrication.
3. Indications whose largest dimension does not exceed 1/64 in. (0.4 mm) shall be disregarded.

FIG. 6 RADIOGRAPHIC ACCEPTANCE STANDARDS FOR ROUNDED INDICATIONS (GRADE 1)

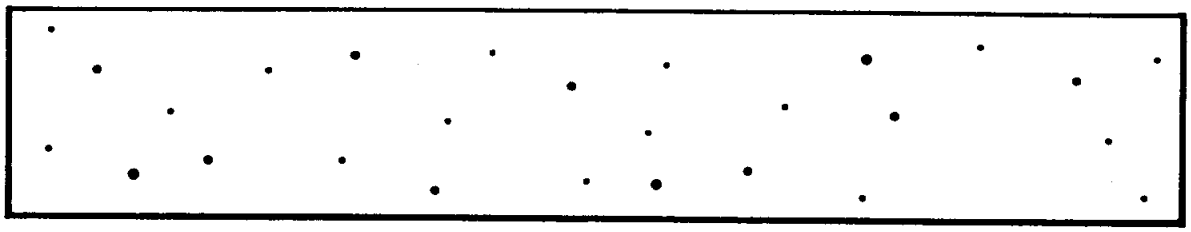

(E) ASSORTED ROUNDED INDICATIONS

SIZE 1/64 In. (0.4 mm) TO 5/64 in. (2.0 mm) IN DIAMETER OR IN LENGTH.
MAXIMUM NUMBER OF INDICATIONS IN ANY 6 in. (150 mm) OF WELD = 27, WITH THE FOLLOWING RESTRICTIONS:
MAXIMUM NUMBER OF LARGE 1/16 in. (1.6 mm) TO 5/64 in. (2.0 mm) IN DIAMETER OR IN LENGTH INDICATIONS = 3.
MAXIMUM NUMBER OF MEDIUM 3/64 in. (1.2 mm) TO 1/16 in. (1.6 mm) IN DIAMETER OR IN LENGTH INDICATIONS = 8.
MAXIMUM NUMBER OF SMALL 1/64 in. (0.4 mm) TO 3/64 in. (1.2 mm) IN DIAMETER OR IN LENGTH INDICATIONS = 16.

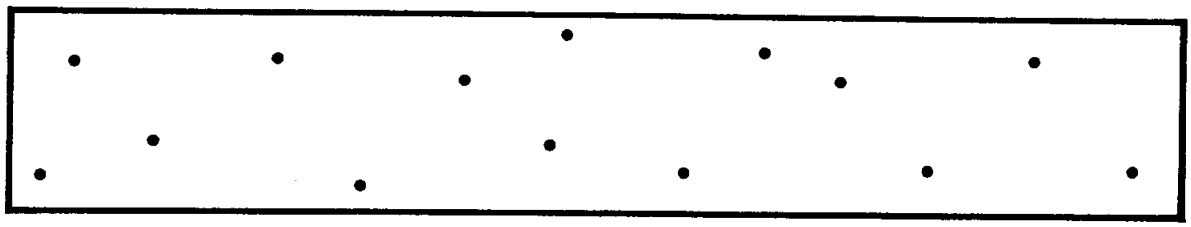

(F) LARGE ROUNDED INDICATIONS

SIZE 1/16 in. (1.6 mm) TO 5/64 in. (2.0 mm) IN DIAMETER OR IN LENGTH.
MAXIMUM NUMBER OF INDICATIONS IN ANY 6 in. (150 mm) OF WELD = 14.

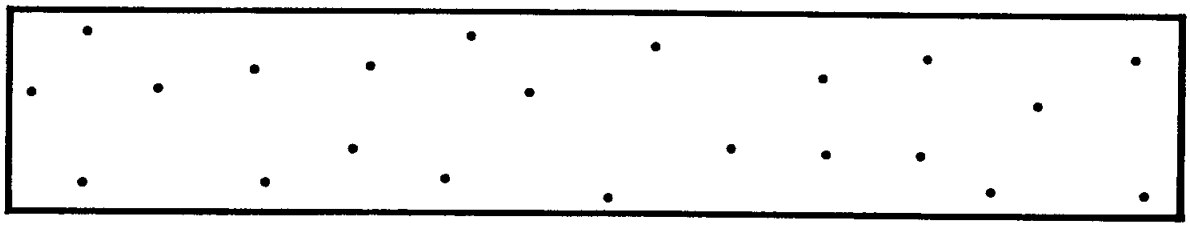

(G) MEDIUM ROUNDED INDICATIONS

SIZE 3/64 in. (1.2 mm) TO 1/16 in. (1.6 mm) IN DIAMETER OR IN LENGTH.
MAXIMUM NUMBER OF INDICATIONS IN ANY 6 in. (150 mm) OF WELD = 22.

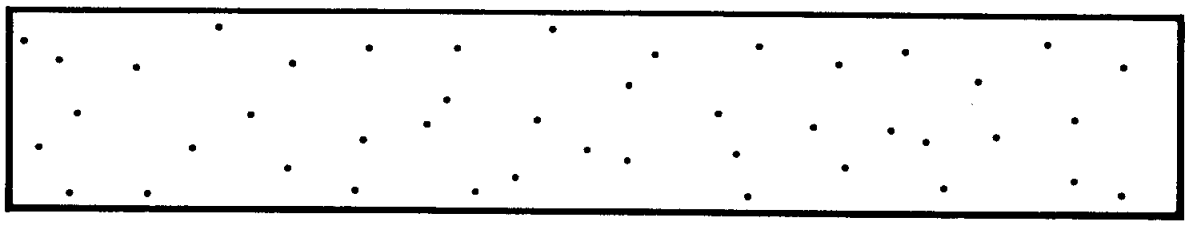

(H) SMALL ROUNDED INDICATIONS

SIZE 1/64 in. (0.4 mm) TO 3/64 in. (1.2 mm) IN DIAMETER OR IN LENGTH.
MAXIMUM NUMBER OF INDICATIONS IN ANY 6 in. (150 mm) OF WELD = 44.

Notes:

1. In using these standards, the chart which is most representative of the size of the rounded indications present in the test specimen radiograph shall be used for determining conformance to these radiographic standards.
2. Since these are test welds specifically made in the laboratory for classification purposes, the radiographic requirements for these test welds are more rigid than those which may be required for general fabrication.
3. Indications whose largest dimension does not exceed 1/64 in. (0.4 mm) shall be disregarded.

FIG. 6 RADIOGRAPHIC ACCEPTANCE STANDARDS FOR ROUNDED INDICATIONS (GRADE 2) (CONT'D)

TABLE 9
RADIOGRAPHIC SOUNDNESS REQUIREMENTS

AWS Classification[a]	Radiographic Standard[b,c]
EXX15-X EXX16-X EXX18-X E7020-X EXX18M E12018M1	Grade 1
EXX10-X EXX11-X EXX13-G E7027-X	Grade 2

NOTES:
a. The letters "XX" used in the classification designations in this table, stand for the various strength levels (70, 80, 90, 100, 110, and 120) of electrodes. The letter suffix "X" as used in this table stands for the suffixes A1, B1, B2, etc. (see Table 2).
b. See Figure 6.
c. The radiographic soundness obtainable under actual industrial conditions employed for the various electrode classifications is discussed in A6.10.1 in the Annex.

14.4 The apparatus used for moisture testing with the referee method[3] shall be as shown in Fig. 11 and shall consist of the following:

(1) A tube furnace with a heating element long enough to heat at least 6 in. (150 mm) of the middle portion of the combustion tube to 2000°F (1093°C).

(2) An oxygen purifying train consisting of a needle valve, a flow meter, a 96 percent sulfuric acid wash bottle, a spray trap, and an anhydrous magnesium perchlorate drying tower.

(3) A fused silica combustion tube of at least $^{7}/_{8}$ in. (22 mm) inside diameter with plain ends and a devitrification point above 2000°F (1093°C). (A high-temperature ceramic tube can be used, but a higher value will be obtained for the blanks.) A plug of glass wool, fine enough to filter the gases, shall be inserted far enough into the exit end of the combustion tube to be heated to a temperature of 400° to 500°F (204° to 260°C).

[3] Modifications of the type described in A8, Modification of Moisture Test Apparatus, which give equivalent results, also meet the requirements of this specification.

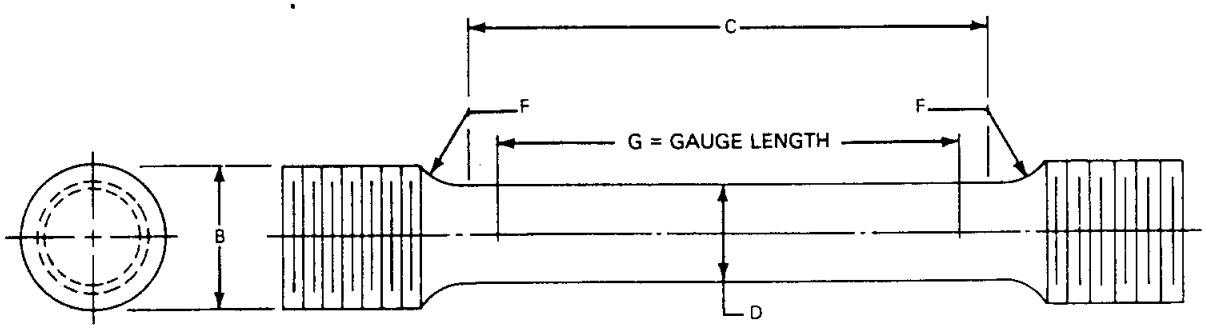

Dimensions of Specimen

Test Plate Thickness		D		G		C		B		F, Min.	
in.	mm	in.	mm	in.	mm	in.	mm	in.	mm	in.	mm
1/2	13	0.250 ± 0.005	6.4 ± 0.13	1.000 ± 0.005	25 ± 0.13	1-1/4	32	3/8	9.5	3/16	4.8
3/4 and larger	19	0.500 ± 0.010	13 ± 0.25	2.000 ± 0.005	50 ± 0.13	2-1/4	57	3/4	13	3/8	9.5

Notes:
1. Dimensions G and C shall be as shown, but ends may be of any shape to fit the testing machine holders as long as the load is axial.
2. The diameter of the specimen within the gauge length shall be slightly smaller at the center than at the ends. The difference shall not exceed one percent of the diameter.
3. When the extensometer is required to determine yield strength, dimension C may be modified. However, the percent of the elongation shall be based on dimension G.
4. The surface finish within the C dimension shall be no rougher than 63 μin. (1.6 μm).

FIG. 7 ALL-WELD-METAL TENSION TEST SPECIMEN DIMENSIONS

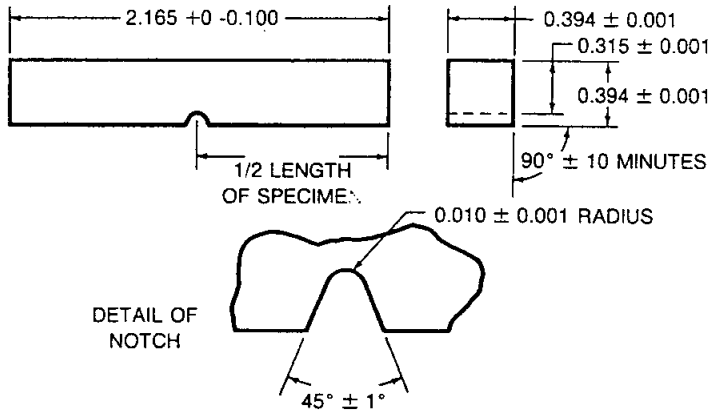

SI EQUIVALENTS

in.	mm
0.001	0.025
0.010	0.255
0.100	2.5
0.315	8.0
0.394	10
2.165	55

Notes:
1. All dimensions except angles are in inches.
2. The notched surface and the surface to be struck shall be parallel within 0.002 in. (0.05 mm) and have at least 63 μin. (1.6 μm) finish. The other two surfaces shall be square with the notched or struck surface within ± 10 minutes of the degree and have at least 125 μin. (3.2 μm) finish.
3. The notch shall be smoothly cut by mechanical means and shall be square with the longitudinal edge of the specimen within one degree.
4. The geometry of the notch shall be measured on at least one specimen in a set of five specimens. Measurement shall be done at minimum 50 times magnification on either a shadowgraph or a metallograph.
5. The correct location of the notch shall be verified by etching before or after machining.
6. If a specimen does not break upon being struck, the value for energy absorbed shall be reported as the capacity of the impact testing machine followed by a plus sign (+).

FIG. 8 CHARPY V-NOTCH IMPACT TEST SPECIMEN

(4) A water absorption train consisting of a U-tube (Schwartz-type) filled with anhydrous magnesium perchlorate and a concentrated sulfuric acid gas-sealing bottle.

14.5 In conducting the moisture test, a sample of approximately 4 grams of covering shall be prepared as a composite of the covering from the middle of three electrodes taken from the same package. The covering shall be removed by bending the electrode or by pinching the covering with clean, dry pliers or forceps. Immediately upon removal, the sample of covering shall be transferred to a dried, stoppered vial or sample bottle.

14.6 The furnace shall be operated at 1775° to 1825°F (968° to 996°C) with an oxygen flow of 200 to 250 mL per minute. The empty boat (see 14.3) shall be placed in the hot zone of the combustion tube, for drying, and the absorption U-tube assembly shall be attached to the system for "conditioning." After 30 minutes, the absorption U-tube shall be removed and placed in the balance case. The boat shall be removed and placed in a desiccator in which anhydrous magnesium perchlorate is used as a desiccant. After a cooling period of 20 minutes, the absorption U-tube shall be weighed.

14.7 In the determination of the blank value, the procedure for an actual moisture determination shall be followed step-by-step with the single exception of omitting the sample. The boat shall be removed from the desiccator and exposed to the atmosphere for a period approximating the time required to transfer a sample from the balance pan to the boat. The combustion tube shall be opened, the weighed absorption U-tube attached, the empty boat placed in the hot zone of the combustion tube, and the tube closed. After a heating period of 30 minutes, the absorption U-tube shall be removed and placed in the balance case. The boat shall be transferred to the desiccator. After the 20 minute cooling period, the absorption U-tube shall be weighed and the gain in weight shall be taken as the blank value.

14.8 Immediately after weighing the absorption U-tube, the sample of the covering shall be weighed and quickly transferred to the boat. The combustion tube shall be opened, the weighed absorption U-tube attached, the boat with sample transferred to the hot zone of

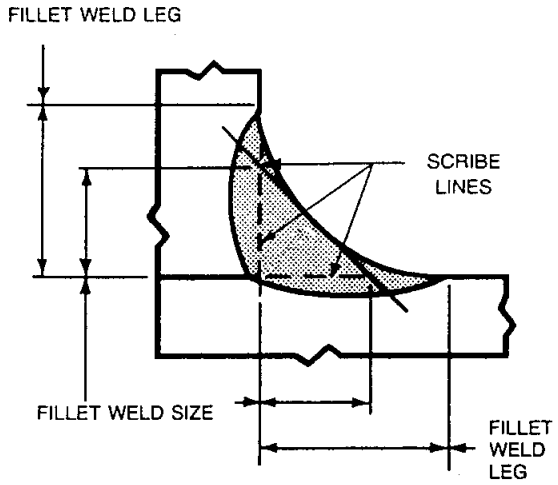

(A) CONCAVE FILLET WELD

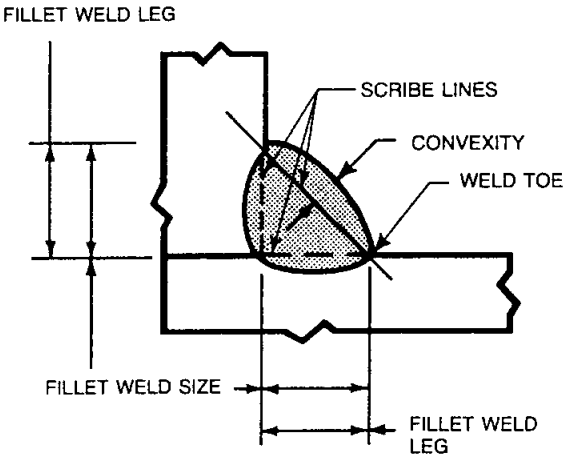

(B) CONVEX FILLET WELD

Notes:
1. Fillet weld size is the leg lengths of the largest isosceles right triangle which can be inscribed within the fillet weld cross section.
2. Convexity is the maximum distance from the face of a convex fillet weld perpendicular to a line joining the weld toes.
3. Fillet weld leg is the distance from the joint root to the toe of the fillet weld.

FIG. 9 DIMENSIONS OF FILLET WELDS

the combustion tube, and the tube closed. After heating for 30 minutes, the absorption U-tube shall be removed and placed in the balance case. If another sample is to be run, the boat shall be taken from the combustion tube, the sample removed, and the boat transferred to the desiccator. The absorption U-tube shall be weighed after the 20 minute cooling period. Another determination may be started immediately, since it is not necessary to repeat the blank determination provided the same combustion boat can be used.

14.9 The calculation shall be made according to the following formula:

$$\text{Percent Moisture} = \frac{A - B}{\text{initial weight of sample}} \times 100$$

where:

A = gain in weight of absorption tube in moisture determination

B = gain in weight of absorption tube in blank determination

15. Absorbed Moisture Test

15.1 In order for a low-hydrogen electrode to be designated as low-moisture-absorbing with the "R" suffix designator, sufficient electrodes shall be exposed to an environment of 80°F and 80% relative humidity for a period of not less than 9 hours by any suitable method. In case of dispute, the exposure method described in 15.2 through 15.6 shall be the referee method. The moisture content of the electrode covering on the low-moisture-absorbing, low-hydrogen electrodes (EXX15-X-R, EXX16-X-R, EXX18-X-R) shall be determined by any suitable method. In case of dispute, the method described in 14.3 through 14.9 shall be the referee method for determination of moisture content. The moisture content of the exposed covering shall not exceed the maximum specified moisture content for the "R" designated electrode and classification in Table 11.

15.2 An electrode sample of the smallest and the largest sizes of the "R" designated electrode shall be used for controlled environmental exposure. If the electrodes are conditioned prior to exposure, that fact, along with the method used for conditioning, and the time and temperature involved in conditioning, shall be noted on the test record. Conditioning of electrodes after exposure is not permitted.

15.3 The electrode samples described in 15.2 shall be exposed in a suitably calibrated and controlled environmental chamber for nine hours minimum at

TABLE 10
DIMENSIONAL REQUIREMENTS FOR FILLET WELD USABILITY TEST SPECIMENS

Measured Fillet Weld Size		Maximum Convexity		Maximum Difference Between Fillet Weld Legs	
in.	mm	in.	mm	in.	mm
1/8, or less	3.2	3/64	1.2	1/32	0.8
9/64	3.6	3/64	1.2	3/64	1.2
5/32	4.0	3/64	1.2	3/64	1.2
11/64	4.4	1/16	1.6	1/16	1.6
3/16	4.8	1/16	1.6	1/16	1.6
13/64	5.2	1/16	1.6	5/64	2.0
7/32	5.6	1/16	1.6	5/64	2.0
15/64	6.0	1/16	1.6	3/32	2.4
1/4	6.4	1/16	1.6	3/32	2.4
17/64	6.7	1/16	1.6	7/64	2.8
9/32	7.1	1/16	1.6	7/64	2.8
19/64	7.5	5/64	2.0	1/8	3.2
5/16	8.0	5/64	2.0	1/8	3.2
21/64	8.3	5/64	2.0	9/64	3.6
11/32	8.7	5/64	2.0	9/64	3.6
23/64	9.1	5/64	2.0	5/32	4.0
3/8, or more	9.5	5/64	2.0	5/32	4.0

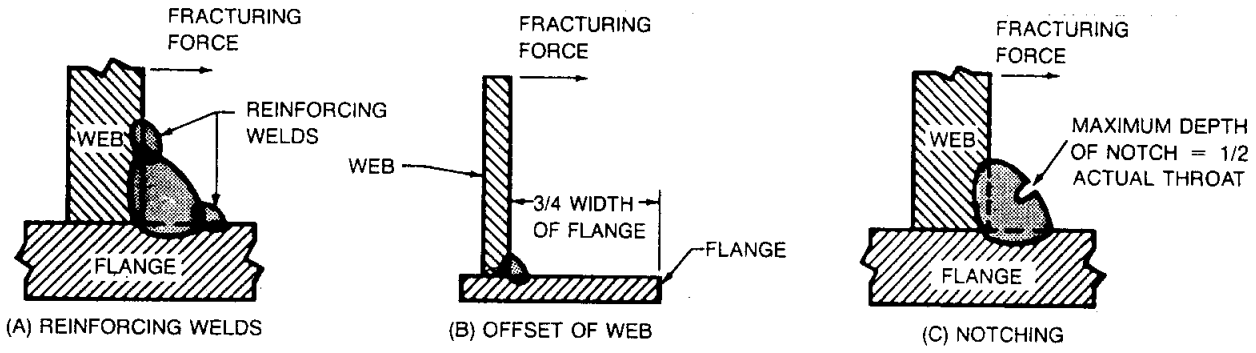

FIG. 10 ALTERNATE METHODS FOR FACILITATING FRACTURE OF THE FILLET WELD

80°F, minus 0, plus 5°F (26.7°C, minus 0, plus 2.8°C) and 80% relative humidity, minus 0, plus 5%.

15.4 The environmental chamber described in 15.3 shall meet the following design requirements:

(1) The apparatus shall be an insulated humidifier which produces the temperature of adiabatic saturation through regenerative evaporation or vaporization of water.

(2) The apparatus shall have an average air speed within the envelope of air surrounding the covered electrodes of 100 to 325 fpm (0.5 to 1.7 m/sec).

(3) The apparatus shall have a drip-free area where covered electrodes up to 18 in. (450 mm) in length can be positioned with length as perpendicular as practical to the general air flow.

(4) The apparatus shall have a calibrated means of continuously measuring and recording the dry bulb temperature and either the wet bulb temperature or the differential between the dry bulb and the wet bulb temperature over the period of time required.

(5) The apparatus shall have an air speed of at least 900 fpm (4.5 m/sec) over the wet bulb sensor unless

TABLE 11
MOISTURE CONTENT LIMITS IN ELECTRODE COVERINGS

AWS Classification	Electrode Designation[a]	Limit of Moisture Content, % by wt., max.	
		As-Received or Reconditioned[b]	As-Exposed[c]
E7015-X E7016-X E7018-X	E7015-X, E7015-X-HZ E7016-X, E7016-X-HZ E7018-X, E7018-X-HZ	0.4	Not specified
E7015-X E7016-X E7018-X	E7015-X-R, E7015-X-HZR E7016-X-R, E7016-X-HZR E7018-X-R, E7018-X-HZR	0.3	0.4
E8015-X E8016-X E8018-X	E8015-X, E8015-X-HZ E8016-X, E8016-X-HZ E8018-X, E8018-X-HZ	0.2	Not specified
E8015-X E8016-X E8018-X	E8015-X-R, E8015-X-HZR E8016-X-R, E8016-X-HZR E8018-X-R, E8018-X-HZR	0.2	0.4
E9015-X E9016-X E9018-X E9018M	E9015-X, E9015-X-HZ E9016-X, E9016-X-HZ E9018-X, E9018-X-HZ E9018M, E9018M-HZ	0.15	Not specified
E9015-X E9016-X E9018-X E9018M	E9015-X-R, E9015-X-HZR E9016-X-R, E9016-X-HZR E9018-X-R, E9018-X-HZR E9018M-R, E9018M-HZR	0.15	0.4
E10015-X E10016-X E10018-X E10018M	E10015-X, E10015-X-HZ E10016-X, E10016-X-HZ E10018-X, E10018-X-HZ E10018M, E10018M-HZ	0.15	Not specified
E10015-X E10016-X E10018-X E10018M	E10015-X-R, E10015-X-HZR E10016-X-R, E10016-X-HZR E10018-X-R, E10018-X-HZR E10018M-R, E10018M-HZR	0.15	0.4
E10015-G E11016-G E11018-G E11018M	E11015-G, E11015-G-HZ E11016-G, E11016-G-HZ E11018-G, E11018-G-HZ E11018M, E11018M-HZ	0.15	Not specified
E11015-G E11016-G E11018-G E11018M	E11015-G-R, E11015-G-HZR E11016-G-R, E11016-G-HZR E11018-G-R, E11018-G-HZR E11018M-R, E11018M-HZR	0.15	0.4
E12015-G E12016-G E12018-G E12018M	E12015-G, E12015-G-HZ E12016-G, E12016-G-HZ E12018-G, E12018-G-HZ E12018M, E12018M-HZ	0.15	Not specified
E12015-G E12016-G E12018-G E12018M	E12015-G-R, E12015-G-HZR E12016-G-R, E12016-G-HZR E12018-G-R, E12018-G-HZR E12018M-R, E12018M-HZR	0.15	0.4
E12018M1	E12018M1, E12018M1-HZ	0.10	Not specified
E12018M1	E12018M1-R, E12018M1-HZR	0.10	0.4

NOTES:
a. See Section 16 and Table 12.
b. As-received or reconditioned electrode coverings shall be tested as specified in Section 14.
c. As-exposed electrode coverings shall be treated with a moist environment as specified in 15.2 through 15.6 before being tesed as specified in 15.1.

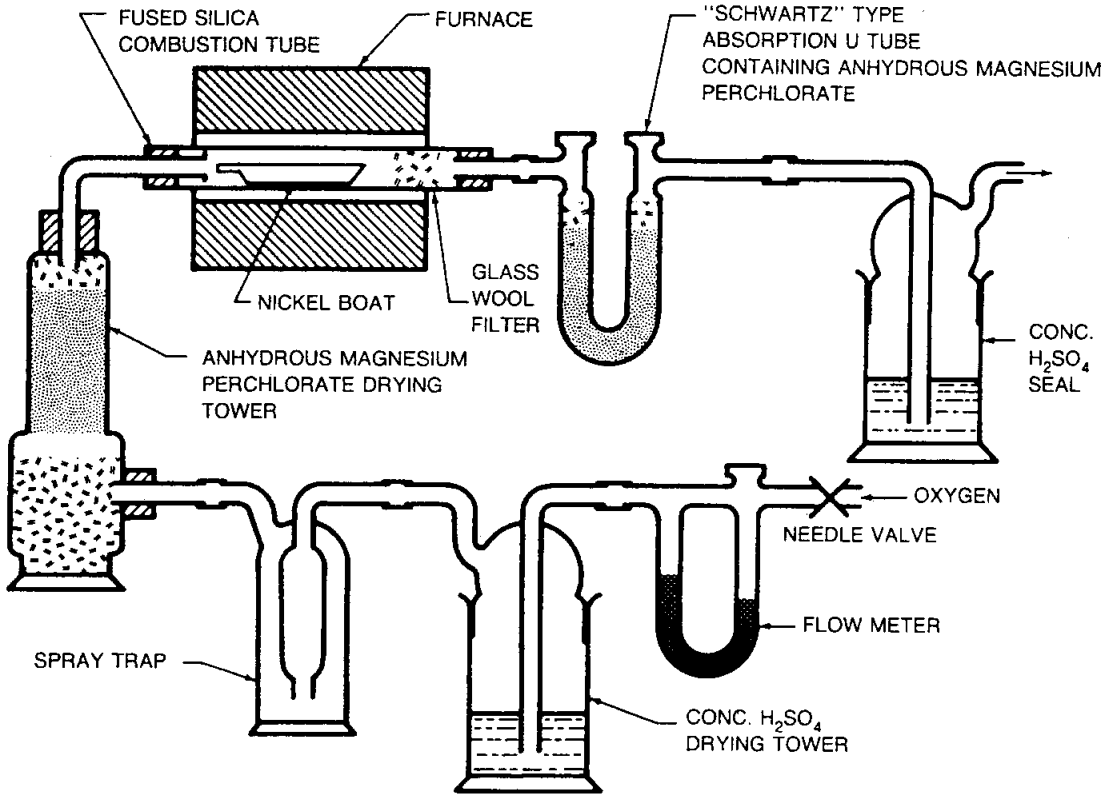

FIG. 11 SCHEMATIC OF TRAIN FOR MOISTURE DETERMINATION

the wet bulb sensor can be shown to be insensitive to air speed or has a known correction factor that will provide for an adjusted wet bulb reading equal to the temperature of adiabatic saturation.

(6) The apparatus shall have the wet bulb sensor located on the suction side of the fan so that there is an absence of heat radiation on the sensor.

15.5 The exposure procedure for electrode samples shall be as follows:

(1) The electrode sample in unopened packages, or from reconditioned lots, shall be heated to a temperature, minus 0, plus 10°F above the dew point of the chamber at the time of loading. In this case, the dew point temperature is 73°F (22.8°C).

(2) The electrode sample shall be loaded into the chamber without delay after the packages are opened.

(3) The electrodes shall be placed in the chamber in a vertical or horizontal position on one inch centers, with the length of the electrode as perpendicular as practical to the general air flow.

(4) Time, temperature, and humidity shall be continuously recorded for the period that the electrodes are in the chamber.

(5) Counting of the exposure time shall start when the required temperature and humidity in the chamber are established.

(6) At the end of the exposure time, the electrode shall be removed from the chamber and a sample of the electrode covering taken for moisture determination, as specified in Section 14, Moisture Test.

15.6 The manufacturer shall control other test variables which are not defined, but which must be controlled to ensure a greater consistency of results.

16. Diffusible Hydrogen Test

The smallest and the largest sizes of the electrode of each classification to be designated by the optional supplemental diffusible hydrogen designator shall be tested according to one of the methods given in ANSI/

TABLE 12
DIFFUSIBLE HYDROGEN REQUIREMENTS FOR WELD METAL AND OPTIONAL SUPPLEMENTAL DESIGNATORS

AWS Classification	Diffusible Hydrogen Designator[a]	Diffusible Hydrogen Content, Average, Maximum[b] mL(H_2)/100g Deposited Metal
E(X)XX15-X, E(X)XX16-X, E(X)XX18-X, or E(X)XX18M(1)	H16	16.0
	H8	8.0
	H4	4.0

NOTES:
a. Diffusible hydrogen testing of low hydrogen electrode classifications is only required when the diffusible hydrogen designator is added to the classification as specified in Figure 12. See Section 16.
b. The lower average diffusible hydrogen levels (H8 and H4) may not be available in all low hydrogen classifications.

AWS A4.3, *Standard Methods for Determination of the Diffusible Hydrogen Content of Martensitic, Bainitic, and Ferritic Weld Metal Produced by Arc Welding.* Testing shall be done without conditioning of the electrode, unless the manufacturer recommends otherwise. If the electrodes are conditioned, that fact, along with the method used for conditioning, and the time and temperature involved in conditioning, shall be noted on the test record. The diffusible hydrogen designator may be added to the classification according to the average test value as compared to the requirements of Table 12.

For purposes of certifying compliance with diffusible hydrogen requirements, the reference atmospheric condition[4] shall be an absolute humidity of 10 grains of water vapor per pound (1.43 g/kg) of dry air at the time of welding. The actual atmospheric conditions shall be reported along with the average value for the test according to ANSI/AWS A4.3.

When the absolute humidity equals or exceeds the reference condition at the time of preparation of the test assembly, the test shall be acceptable as demonstrating compliance with the requirements of this specification, provided the actual test results satisfy the diffusible hydrogen requirements for the applicable designator. Likewise, if the actual test results for an electrode meet the requirements for the lower, or lowest hydrogen designator, as specified in Table 12, the electrode also meets the requirements for all higher hydrogen designators in Table 12 without the need to retest.

PART C — MANUFACTURE, IDENTIFICATION, AND PACKAGING

17. Method of Manufacture

The electrodes classified according to this specification may be manufactured by any method that will produce electrodes that meet the requirements of this specification.

[4] See A9.2 (in the Annex) for further explanation of reference atmospheric condition in psychometric terms.

18. Standard Sizes and Lengths

18.1 Standard sizes (diameter of the core wire) and lengths of electrodes are shown in Table 13.

18.2 The diameter of the core wire shall not vary more than plus or minus 0.002 in. (0.05 mm) from the diameter specified. The length shall not vary more than plus or minus $\frac{1}{4}$ in. (6.4 mm) from that specified.

19. Core Wire and Covering

19.1 The core wire and covering shall be free of defects that would interfere with uniform deposition of the electrode.

19.2 The core wire and the covering shall be concentric to the extent that the maximum core-plus-one covering dimension shall not exceed the minimum core-plus-one covering dimension by more than:

(1) seven percent of the mean dimension in sizes $\frac{3}{32}$ in. (2.4 mm) and smaller;

(2) five percent of the mean dimension in sizes $\frac{1}{8}$ in. (3.2 mm) and $\frac{5}{32}$ in. (4.0 mm); and

(3) four percent of the mean dimension in sizes $\frac{3}{16}$ in. (4.8 mm) and larger.

Concentricity may be measured by any suitable means.

20. Exposed Core

20.1 The grip end of each electrode shall be bare (free of covering) for a distance of not less than $\frac{1}{2}$ in. (12.5 mm), nor more than $1\frac{1}{4}$ in. (30 mm) for $\frac{5}{32}$ in. (4.0 mm) and smaller sizes, and not less than $\frac{3}{4}$ in. (19 mm) nor more than $1\frac{1}{2}$ in. (40 mm) for

TABLE 13
STANDARD SIZES AND LENGTHS

Standard Sizes, (Core Wire Diameter)[d]			Standard Lengths[a,b,c]			
			All Classifications except E7020-A1, E7020-G, E7027-A1 and E7027-G		E7020-A1, E7020-G, E7027-A1 and E7027-G	
in.		mm	in.	mm	in.	mm
3/32[e]	(0.093)	2.4[e]	12 or 14	300 or 350	12	300
1/8	(0.125)	3.2	14	350	14	350
5/32	(0.156)	4.0	14	350	14	350
3/16	(0.187)	4.8	14	350	14 or 18	350 or 450
7/32[e]	(0.218)	5.6[e]	14 or 18	350 or 450	18 or 28	450 or 700
1/4[e]	(0.250)	6.4[e]	18	450	18 or 28	450 or 700
5/16[e]	(0.312)	8.0[e]			18 or 28	450 or 700

NOTES:
a. Tolerance on the length shall be ±1/4 in. (±10 mm).
b. In all cases, end gripping is standard.
c. Other lengths are acceptable and shall be as agreed upon by the supplier and purchaser.
d. Tolerance on the core wire diameter shall be ±0.002 in. (±0.05 mm). Electrodes produced in sizes other than those shown may be classified. See Note c of Table 5.
e. These diameters are not manufactured in all electrode classifications (see Table 5).

3/16 in. (4.8 mm) and larger sizes, to provide for electrical contact with the electrode holder.

20.2 The arc end of each electrode shall be sufficiently bare and the covering sufficiently tapered to permit easy striking of the arc. The length of the bare portion (measured from the end of the core wire to the location where the full cross-section of the covering is obtained) shall not exceed 1/8 in. (3.2 mm) or the diameter of the core wire, whichever is less. Electrodes with chipped coverings near the arc end, baring the core wire no more than the lesser of 1/4 in. (6.4 mm) or twice the diameter of the core wire, meet the requirements of this specification provided no chip uncovers more than 50 percent of the circumference of the core.

21. Electrode Identification

All electrodes shall be identified as follows:

21.1 At least one imprint of the electrode designation (classification plus any optional designators) shall be applied to the electrode covering in the order specified in Fig. 12 within 2 1/2 in. (65 mm) of the grip end of the electrode.

21.2 The numbers and letters of the imprint shall be of bold block type of a size large enough to be legible.

21.3 The ink used for imprinting shall provide sufficient contrast with the electrode covering so that, in normal use, the numbers and letters are legible both before and after welding.

21.4 The prefix letter "E" in the electrode classification may be omitted from the designation imprint.

22. Packaging

22.1 Electrodes shall be suitably packaged to protect them from damage during shipment and storage under normal conditions. When electrodes are packaged in hermetically-sealed containers, the type of hermetically-sealed container shall be capable of passing the test specified in 22.2.

22.2 For test, a representative container shall be immersed in water that has been heated to a temperature of at least 50°F (28°C) above that of the packaged material (room temperature). The container shall be immersed so that the surface under observation is 1 in. (25 mm) below the water level and the greatest basic dimension is parallel to the water surface. A container with a steady stream of bubbles that lasts for 30 seconds or more does not meet the requirements of the specification.

22.3 Standard package weights shall be as agreed between purchaser and supplier.

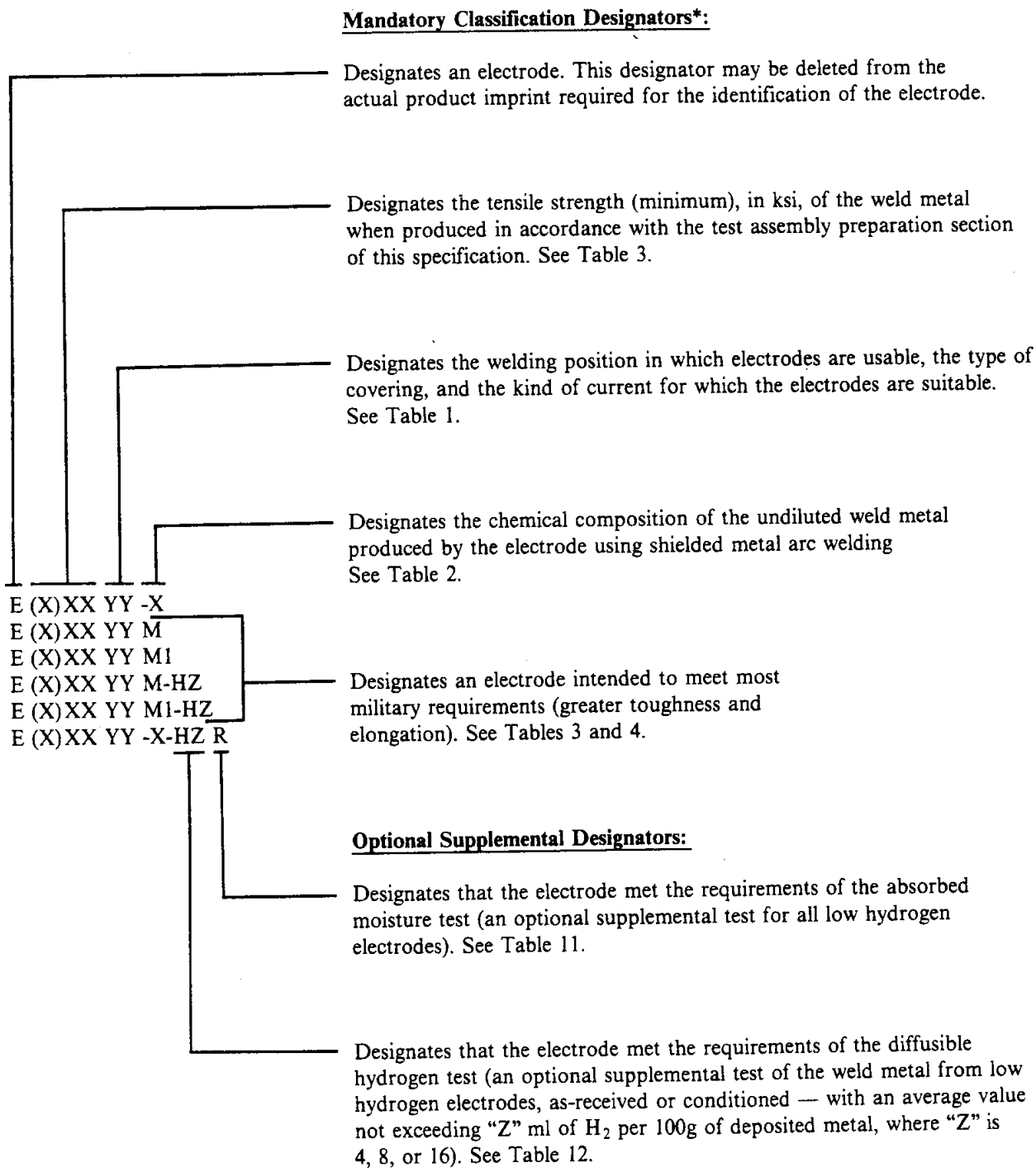

*The combination of these designators constitutes the electrode classification.

FIG. 12 ORDER OF ELECTRODE MANDATORY AND OPTIONAL SUPPLEMENTAL DESIGNATORS

23. Marking of Packages

23.1 The following product information (as a minimum) shall be legibly marked on the outside of each unit package:

(1) AWS specification (year of issue may be excluded) and electrode designation (classification plus any optional supplemental designators)

(2) Supplier's name and trade designation

(3) Size and net weight

(4) Lot, control, or heat number

23.2 The following precautionary information (as a minimum) shall be prominently displayed in legible print on all packages of electrode, including individual unit packages enclosed within a larger package:

WARNING: Protect yourself and others. Read and understand this information.

FUMES AND GASES can be dangerous to your health.

ARC RAYS can injure eyes and burn skin.

ELECTRIC SHOCK can kill.

- Before use, read and understand the manufacturer's instructions, Material Safety Data Sheets (MSDSs), and your employer's safety practices.
- Keep your head out of the fumes.
- Use enough ventilation, exhaust at the arc, or both, to keep fumes and gases away from your breathing zone and the general area.
- Wear correct eye, ear, and body protection.
- Do not touch electrical parts.
- See American National Standard Z49.1, *Safety in Welding and Cutting,* published by the American Welding Society, 550 N.W. LeJeune Road, Miami, Florida 33126; OSHA Safety and Health Standards, *29 CFR 1910,* available from the U.S. Government Printing Office, Washington, DC 20402.

DO NOT REMOVE THIS INFORMATION

Annex
Guide to AWS Specification for Low-Alloy Steel Electrodes for Shielded Metal Arc Welding

(This Annex is not a part of AWS A5.5-96, *Specification for Low Alloy Steel Electrodes for Shielded Metal Arc Welding*, but is included for information purposes only.)

A1. Introduction

This guide is appended to the specification as a source of information. The guide is not mandatory and does not form a part of the specification. This guide was designed to correlate the covered electrode classifications with the intended applications so the specification can be used effectively. Such correlations are intended as examples rather than complete listings of the base metals for which each filler metal is suitable.

A2. Classification System

A2.1 The system for electrode classification in this specification follows the standard pattern used in other AWS filler metal specifications. The letter "E" at the beginning of each classification designation stands for electrode. The first two (or three) digits, 70 (or 110), for example, designate tensile strength of at least 70 (or 110) ksi of the weld metal, welded and postweld heat treated (if required) in accordance with the test assembly preparation section of this specification. The third (or fourth) digit designates position usability that will allow satisfactory welds to be produced with the electrode. Thus, the "1," as in E7018-C2L (or E11018M), means that the electrode is usable in all positions (flat, horizontal, vertical, and overhead). The "2," as in E7020-A1, designates that the electrode is suitable for use in the flat position and for making fillet welds in the horizontal position. The last two digits taken together designate the type of current with which the electrode can be used and the type of covering on the electrode, as listed in Table 1.

With the exception of the military similar electrodes [e.g., E(X)XX18M(1)], the classifications in this specification also include a suffix designator, separated by a hyphen from the tensile strength and usability designators, and by a second hyphen, if necessary, from any optional supplemental designators which are not part of the classification designation. This composition designator, such as A1, B3, or W1, immediately identifies the classification as different from those in ANSI/AWS A5.1, *Specification for Carbon Steel Electrodes for Shielded Metal Arc Welding*. The composition designator identifies the chemical composition of the weld metal as specified in Table 2. For example, an "A1" composition designator identifies the electrode as one that produces carbon-molybdenum steel weld metal, when the electrode is deposited using shielded metal arc welding.

A2.2 "G" Classifications

A2.2.1 The specification includes filler metals classified as E(X)XXYY-G. The "G" indicates that the filler metal is of a general classification. It is "general" because not all of the particular requirements specified for each of the other classifications are specified for this classification. The intent, in establishing this classification, is to provide a means by which filler metals that differ in one respect or another (chemical composition, for example) from all other classifications (meaning that the composition of the filler metal—in the case of the example—does not meet the composition specified for any of the classifications in the specification) can still be classified according to the specification. The purpose is to allow a useful filler metal, one that otherwise would have to await a revision of the specification, to be classified immediately, under the existing specification. This means, then, that two filler metals, each bearing the same "G" classification, may

be quite different in some certain respect (chemical composition, again, for example).

A2.2.2 The point of difference (although not necessarily the amount of difference) referred to above will be readily apparent from the use of the words "not required" and "not specified" in the specification. The use of these words is as follows:

Not Specified is used in those areas of the specification that refer to the results of some particular test. It indicates that the requirements for that test are not specified for that particular classification.

Not Required is used in those areas of the specification that refer to the test that must be conducted in order to classify a filler metal. It indicates that the test is not required because the requirements for the test have not been specified for that particular classification.

Restating the case, when a requirement is not specified, it is not necessary to conduct the corresponding test in order to classify a filler metal to that classification. When a purchaser wants the information provided by that test, in order to consider a particular product of that classification for a certain application, the purchaser will have to arrange for that information with the supplier of that product. The purchaser will also have to establish with that supplier just what the testing procedure and the acceptance requirements are to be, for that test. The purchaser may want to incorporate that information (via ANSI/AWS A5.01, *Filler Metal Procurement Guidelines*) in the purchase order.

A2.2.3 Request for Filler Metal Classification

A2.2.3.1 When a filler metal cannot be classified according to some classification other than a "G" classification, the manufacturer may request that a classification be established for that filler metal by using the procedure given here. When the manufacturer elects to use the "G" classification, the Filler Metal Committee recommends that the manufacturer still request that a classification be established for that filler metal, as long as the filler metal is of commercial significance.

A2.2.3.2 A request to establish a new filler metal classification must be a written request, and it needs to provide sufficient detail to permit the Filler Metal Committee or the Subcommittee to determine whether a new classification or the modification of an existing classification is more appropriate, and whether either is necessary to satisfy the need. The request needs to state the variables and their limits for such a classification or modification. The request should contain some indication of the time by which completion of the new classification or modification is needed.

A2.2.3.3 The request should be sent to the Secretary of the Filler Metal Committee at AWS Headquarters. Upon receipt of the request, the Secretary will do the following:

(a) Assign an identifying number to the request. This number will include the date the request was received.

(b) Confirm receipt of the request and give the identification number to the person who made the request.

(c) Send a copy of the request to the Chairman of the Filler Metal Committee and the Chairman of the particular Subcommittee involved.

(d) File the original request.

(e) Add the request to the log of outstanding requests.

A2.2.3.4 All necessary action on each request will be completed as soon as possible. If more than 12 months lapse, the Secretary shall inform the requestor of the status of the request, with copies to the Chairman of the Committee and the Subcommittee. Requests still outstanding after 18 months shall be considered not to have been answered in a "timely manner" and the Secretary shall report these to the Chairman of the Filler Metal Committee, for action.

A2.2.3.5 The Secretary shall include a copy of the log of all requests pending and those completed during the preceding year with the agenda for each Filler Metal Committee meeting. Any other publication of requests that have been completed will be at the option of the American Welding Society, as deemed appropriate.

A2.3 Optional supplemental designators are also used in this specification in order to identify electrode classifications that have met certain supplemental requirements as agreed to between the supplier and the purchaser. The optional supplemental designators are not part of the classification nor of its designation.

An optional supplemental designator "HZ" following the classification designation, which consists of four or five digits plus "M," or a composition suffix such as "-A1," "-B2," or "-C2L," indicates an average diffusible hydrogen content of not more than "Z" mL/100g of deposited metal when tested in the "as-received" or conditioned state in accordance with ANSI/AWS A4.3. See Section 16 and Table 12. Electrodes that are designated as meeting the lower, or lowest hydrogen limits, as specified in Table 12, also are understood to be able to meet any higher hydrogen limits. Therefore, as an example, an electrode designated as "H4" also

meets "H8" and "H16" requirements without being designated as such. The letter "R" is an example of a supplemental designator used with certain low-hydrogen electrode classifications. It identifies classifications that have been exposed to a humid environment for a given length of time and tested for low moisture absorption in addition to the standard moisture test required for classification of low-hydrogen electrodes. See Note d to Table 1, as well as Tables 11 and 12.

A3. Acceptance

Acceptance of all welding materials classified under this specification is in accordance with ANSI/AWS A5.01, *Filler Metal Procurement Guidelines,* as the specification states. Any testing a purchaser requires of the supplier, for material shipped in accordance with this specification, shall be clearly stated in the purchase order, according to the provisions of ANSI/AWS A5.01. In the absence of any such statement in the purchase order, the supplier may ship the material with whatever testing is normally conducted on material of that classification, as specified in Schedule F, Table 1, of ANSI/AWS A5.01. Testing in accordance with any other Schedule in that Table must be specifically required by the purchase order. In such cases, acceptance of the material shipped will be in accordance with those requirements.

A4. Certification

The act of placing the AWS specification and classification designations on the packaging enclosing the product, or the classification on the product itself, constitutes the supplier's (manufacturer's) certification that the product meets all of the requirements of the specification.

The only testing requirement implicit in this certification is that the manufacturer has actually conducted the tests required by the specification on material that is representative of that being shipped and that the material met the requirements of the specification. Representative material, in this case, is any production run of that classification using the same formulation. "Certification" is not to be construed to mean that tests of any kind were necessarily conducted on samples of the specific material shipped. Tests on such material may or may not have been made. The basis for the certification required by the specification is the classification test of "representative material" cited above, and the "Manufacturer's Quality Assurance System" in ANSI/AWS A5.01.

A5. Ventilation During Welding

A5.1 Five major factors govern the quantity of fumes in the atmosphere to which welders and welding operators are exposed during welding:

(1) Dimensions of the space in which welding is done (with special regard to the height of the ceiling)

(2) Number of welders and welding operators working in that space

(3) Rate of evolution of fumes, gases, or dust, according to the materials and processes used

(4) The proximity of welders and welding operators to the fumes as they issue from the welding zone, and to the gases and dust in the space in which they are working

(5) The ventilation provided to the space in which the welding is done

A5.2 American National Standard ANSI/ASC Z49.1, *Safety in Welding, Cutting, and Allied Processes* (published by the American Welding Society), discusses the ventilation that is required during welding and should be referred to for details. Attention is drawn particularly to the section of that document entitled Ventilation.

A6. Welding Considerations

A6.1 Weld metal properties may vary widely, according to size of the electrode and amperage used, size of the weld beads, base-metal thickness, joint geometry, preheat and interpass temperatures, surface condition, base-metal composition, dilution, etc. Because of the profound effect of these variables, a test procedure was chosen for this specification which would represent good welding practice and minimize variation of the most potent of these variables.

A6.2 It should be recognized, however, that production practices may be different. The differences encountered may alter the properties of the weld metal. For instance, interpass temperatures may range from subfreezing to several hundred degrees. No single temperature or reasonable range of temperatures can be chosen for classification tests which would be representative of all of the conditions encountered in production work. Properties of production welds may vary accordingly, depending on the particular welding conditions.

Weld metal properties may not duplicate, or even closely approach, the values listed and prescribed for test welds. For example, ductility in single pass welds in thick base-metal made outdoors in cold weather without adequate preheating may drop to little more than half that required herein and normally obtained.

This does not indicate that either the electrodes or the welds are below standards in this specification. It indicates only that the particular production conditions are more severe than the test conditions prescribed by this specification.

A6.3 Hydrogen is another factor to be considered in welding. Weld metals, other than those from low-hydrogen electrodes [E(X)XX15-X, E(X)XX16-X, E(X)XX18M(1), and E(X)XX18-X], contain significant quantities of hydrogen for some period of time after they have been made. Most of this hydrogen gradually escapes. After two to four weeks at room temperature or in 24 to 48 hours at 200° to 220°F (95° to 105°C), most of it has escaped. As a result of this change in hydrogen content, ductility of the weld metal increases towards its inherent value, while yield, tensile, and impact strengths remain relatively unchanged.

This specification requires aging of the test specimens of cellulosic electrodes at 200° to 220°F (95° to 105°C) for 48 hours before subjecting them to tension testing. This is done to minimize discrepancies in testing. Aging treatments are sometimes used for low-hydrogen electrodes, especially when testing high-strength deposits. Note that aging may involve holding test specimens at room temperature for several days or holding at a higher temperature for a shorter period of time. Consequently, users are cautioned to employ adequate preheat and interpass temperatures to avoid the deleterious effects of hydrogen in production welds.

A6.4 Welds made with electrodes of the same classifications and the same welding procedure will have significantly different tensile and yield strengths in the as-welded and postweld heat-treated conditions. Even weld metal produced from the same classification and the same welding procedure but with different postweld heat-treatment holding temperatures or times at holding temperatures will have different strength levels. With the low-alloy steel weld metals produced by the classifications in this specification, postweld heat treatment can produce tempering (softening) or secondary hardening of the weld metal. It is recommended that users conduct their own evaluation of the welding procedure to be used in production in order to verify that the weld metal properties obtained in actual production are those desired.

A6.5 Preheat and interpass minimum temperatures also have a significant effect on the strength levels attained with certain low-alloy steel weld metals. These weld metals are affected by rapid cooling rates which tend to produce more martensitic or bainitic microstructures. These microstructures will often exhibit higher yield and tensile strengths with a decrease in ductility. The cooling rate can be retarded by utilizing a higher preheat and interpass temperature. The preheat and interpass temperature ranges given in Table 7 of this specification are adequate for the preparation of the test assemblies. However, in actual production, users are encouraged to test their own procedures to verify that they have selected preheat and interpass temperatures which will produce desirable results in production.

A6.6 Heat input usually is measured as Joules per linear inch, J/in. (kJ/cm). However, in this specification the heat input is governed in the preparation of the test assembly by the bead sequence and the total weld layer count upon completion of the groove weld test assembly.

Heat input will have a significant effect on the strength levels attained in many of the higher strength weld metals produced from the electrode classifications in this specification. For instance, weld metal produced with E11018M electrode at a 35 000 J/in. (13.8 kJ/cm) heat input rate may exceed 110 ksi (760 MPa) yield strength in the as-welded condition and 95 ksi (655 MPa) yield strength after postweld heat treatment. On the other hand, if the heat input is raised to 55 000 J/in. (21.7 kJ/cm), this same electrode will produce weld metal that does not exceed 110 ksi (760 MPa) as-welded yield strength and after postweld heat treatment may be below 95 ksi (655 MPa) yield strength. It is, therefore, recommended that, if the user is going to use either lower or higher heat inputs than normally used for classification testing of electrodes, the user should test the welding procedure to be used to determine that the strength levels expected will be attained in production. This is especially true if out-of-position welding is to be performed.

A6.7 Electrodes which meet all the requirements of any given classification may be expected to have similar characteristics. Certain minor differences continue to exist from one brand to another due to differences in preferences that exist regarding specific operating characteristics.

A6.8 Since the electrodes within a given classification have similar operating characteristics and mechanical properties, the user can usually limit the study of available electrodes to those within a single classification after determining which classification best suits the user's particular requirements.

A6.9 This specification does not establish values for all characteristics of the electrodes falling within a given classification, but it does establish values to measure those of major importance. In some instances,

the characteristics are so intangible that no adequate tests are available. This specification does not necessarily provide all the information needed to determine which classification will best fulfill a particular need. Therefore, a discussion of each classification group is included in Section A7, Description and Intended Use of Electrodes, to supplement information given elsewhere in the specification.

A6.10 Some important tests for measuring major electrode characteristics are as follows:

A6.10.1 Radiographic Test. Nearly all of the low-alloy steel electrodes covered by this specification are capable of producing welds that meet most radiographic soundness requirements. However, if incorrectly applied, unsound welds may be produced by any of the electrodes. For electrodes of some classifications, the radiographic requirements in Table 9 are not necessarily indicative of the average radiographic soundness to be expected in production use. Electrodes of the E(X)XX10-X, E(X)XX11-X, and E7020-X classifications can be expected to produce acceptable radiographic results. Under certain conditions, notably in welding long, continuous joints in relatively thick base metal, low-hydrogen electrodes of the E(X)XX15-X, E(X)XX16-X, E(X)XX18M(1), and E(X)XX18-X classifications will often produce even better results.

On the other hand, in joints open to the atmosphere on the root side, at the ends of joints, in joints with many stops and starts, and in welds on small diameter pipe or in small, thin, irregularly-shaped joints, the low-hydrogen electrodes tend to produce welds of poor radiographic soundness. E(X)XX13-X electrodes usually produce the best radiographic soundness in welding small, thin parts. E7027-X electrodes produce welds which may be either quite good or rather inferior in radiographic soundness. The tendency seems to be in the latter direction.

A6.10.2 Fillet Weld Test. This test is included as a means of demonstrating the usability of an electrode. This test is concerned with the appearance of the weld (i.e., weld face contour and smoothness, undercut, overlap, size, and resistance to cracking). It also provides an excellent and inexpensive method of determining the adequacy of fusion at the weld root (one of the important considerations for an electrode). Test results may be influenced by the level of welded skill.

A6.10.3 Toughness. Charpy V-notch impact requirements are included in the specification. All classifications of electrodes in the specification can produce weld metal of sufficient toughness for many applications. The inclusion of impact requirements for certain electrode classifications allows the specification to be used as a guide in selecting electrodes where low-temperature toughness is required. There can be considerable variation in the weld-metal toughness unless particular attention is given to the welding procedure and the preparation and testing of the specimens. The impact energy values are for Charpy V-notch (ISO-V) specimens and should not be confused with values obtained with other toughness tests.

A6.11 Electrode Covering Moisture Content and Conditioning

A6.11.1 Hydrogen can have adverse effects on welds in some steels under certain conditions. One source of this hydrogen is moisture in the electrode coverings. For this reason, the proper storage, treatment, and handling of electrodes is necessary.

A6.11.2 Electrodes are manufactured to be within acceptable moisture limits, consistent with the type of covering and strength of the weld metal. They are then normally packaged in a container which has been designed to provide the degree of moisture protection considered necessary for the type of covering involved.

A6.11.3 If there is a possibility that the noncellulosic covered electrodes may have absorbed excessive moisture, they may be reconditioned by rebaking. Some electrodes require rebaking at a temperature as high as 800°F (425°C) for approximately 1 to 2 hours. The manner in which the electrodes have been produced and the relative humidity and temperature conditions under which the electrodes are stored determine the proper length of time and temperature used for conditioning. Some typical storage and drying conditions are included in Table A1.

A6.11.4 Cellulosic coverings for E(X)XX10-X and E(X)XX11-X classifications need moisture levels of 3 to 7 percent for proper operation. Therefore, storage or conditioning above ambient temperature may dry these electrodes too much and adversely affect their operation (see Table A1).

A6.12 Core Wire. The core wire for all the electrodes in this specification is usually a steel having a typical composition which may differ significantly from that of the weld metal produced by the covered electrode.

A6.13 Coverings

A6.13.1 Electrodes of some classifications have substantial quantities of iron powder added to their coverings. The iron powder fuses with the core wire and other metals in the covering, as the electrode melts,

TABLE A1
TYPICAL STORAGE AND DRYING CONDITIONS FOR COVERED ARC WELDING ELECTRODES

AWS Classifications	Storage Conditions[a]		Drying Conditions[b]
	Ambient Air	Holding Ovens	
EXX10-X EXX11-X	Ambient temperature	100–120°F (38–49°C)	Not recommended
EXX13-X E7020-X E7027-X	60–100°F (16–38°C) 50 percent max relative humidity	100–120°F (38–49°C)	250–300°F (121–149°C) 1 hour at temperature
EXX15-X EXX16-X EXX18M(1) EXX18-X	Not recommended[c]	250–300°F (121–149°C)	500–800°F (260–427°C) 1 hour at temperature

NOTES:
a. After removal from manufacturer's packaging.
b. Because of inherent differences in covering compositions the manufacturer should be consulted for the exact drying conditions.
c. Some of these electrode classifications may be designated as meeting low moisture absorbing requirements. This designation does not imply that storage in ambient air is recommended.

and is deposited as part of the weld metal, just as is the core wire. Relatively high amperages can be used since a considerable portion of the electrical energy passing through the electrode is used to melt the thicker covering containing iron powder. The result is that more weld metal may be obtained from a single electrode with iron powder in its covering than from a single electrode of the same size without iron powder.

A6.13.2 Due to the thick covering and deep cup produced at the arcing end of the electrode, iron powder electrodes can be used very effectively with a "drag" technique. This technique consists of keeping the electrode covering in contact with the workpiece at all times, which makes for easy handling. However, a technique using a short arc length is preferable if the $^{3}/_{32}$ in. (2.4 mm) or $^{1}/_{8}$ in. (3.2 mm) electrodes are to be used in other than flat or horizontal fillet welding positions or for making groove welds.

A6.13.3 The E70YY-X electrodes were included in this specification to recognize the lowest strength levels obtained with low-alloy steel electrodes, as well as, to recognize the industry demand for low-alloy electrodes with 70 ksi (480 MPa) minimum tensile strength. Unlike the E70YY classifications in ANSI/AWS A5.1, *Specification for Carbon Steel Electrodes for Shielded Metal Arc Welding,* these electrodes do contain deliberate alloy additions, and some are required to meet minimum tensile properties after postweld heat treatment.

A6.13.4 Low-hydrogen electrodes have mineral coverings which are high in calcium carbonate and other ingredients that are low in moisture and organic materials and hence "low in hydrogen content." Low-hydrogen electrodes were developed for welding low-alloy, high-strength steels, some of which were high in carbon content. Electrodes with other than low-hydrogen coverings may produce "hydrogen induced cracking" in those steels.

Underbead cracks occur in the base metal, usually just below the weld bead. Weld cracks also may occur. These cracks are caused by the hydrogen absorbed from the arc atmosphere. Although these cracks do not generally occur in carbon steels which have a low carbon content, they may occur when welding higher carbon or low-alloy steels with other than low-hydrogen electrodes and without precautions, such as, increased preheat temperatures and postweld heating. For more information on special tests for low-hydrogen electrodes, see Sections 15 and 16 in the specification and A9.2 and A9.3 in this Annex.

A6.14 Amperage Ranges. Table A2 gives amperage ranges which are satisfactory for most classifications. When welding in the vertical position with upward progression, currents near the lower limit of the range are generally used.

A7. Description and Intended Use of Electrodes

A7.1 Chemical Composition. The chemical composition of the weld metal produced is often the primary

TABLE A2
TYPICAL AMPERAGE RANGES

Electrode Diameter							
in.	mm	EXX10-X and EXX11-X	EXX13-X	E7020-X	E7027-X	EXX15-X and EXX16-X	EXX18M(1) and EXX18-X
3/32	2.4	40 to 80	45 to 90	—	—	65 to 110	70 to 100
1/8	3.2	75 to 125	80 to 130	100 to 150	125 to 185	100 to 150	115 to 165
5/32	4.0	110 to 170	105 to 180	130 to 190	160 to 240	140 to 200	150 to 200
3/16	4.8	140 to 215	150 to 230	175 to 250	210 to 300	180 to 255	200 to 275
7/32	5.6	170 to 250	—	225 to 310	250 to 350	240 to 320	260 to 340
1/4	6.4	210 to 320	—	275 to 375	300 to 420	300 to 390	315 to 400
5/16	8.0	—	—	—	375 to 475	—	—

consideration for electrode selection. Together with appropriate heat treatments, each composition can achieve a wide range of corrosion resistance and mechanical properties at various service temperatures. It is usually desirable for weld metal to match the chemical composition and the mechanical properties of the base metal as closely as possible. In fact, many of the electrodes classified to this specification have been developed for specific base-metal grades or classes. If an optimum match is not possible, engineering judgment together with weld testing may be required to select the most suitable electrodes.

Table 2 provides detailed weld metal chemical composition requirements for each electrode classification. Tables 3 and 4 list the mechanical properties of the weld metal when the electrode is used in the flat downhand position, and the weldment is subjected to the postweld heat-treatment (PWHT) requirements in Tables 3 and 7. Is should be noted that changes in welding position, welding variables, or heat treatment can be expected to affect the mechanical properties. However, except for the effects of dilution, the chemical composition can be expected to remain reasonably unchanged.

The suffixes, which are part of each alloy electrode classification, identify the chemical composition of the weld metal produced by the electrode. The following paragraphs highlight the differences between these electrodes and electrode groups and indicate typical applications.

A7.1.1 E70YY-A1 (C-Mo Steel) Electrodes. These electrodes are similar to the E70YY carbon steel electrodes classified in ANSI/AWS A5.1, except that ½% molybdenum has been added. This addition increases the strength of the weld metal, especially at elevated temperatures, and provides some increase in corrosion resistance; however, it may reduce the notch toughness of the weld metal. Typical applications include the welding of C-Mo steel base metals such as ASTM A204 plate and A335-P1 pipe.

A7.1.2 EX01Y-BX and EX01Y-BXL (Cr-Mo Steel) Electrodes. These low-hydrogen electrodes produce weld metal that contains between ½% and 9% chromium and between ½% to 1% molybdenum. They are designed to produce weld metal for high-temperature service and for matching the properties of the typical base metals as shown in Table A3.

For many of these Cr-Mo electrode classifications, low carbon EXX1Y-BXL classifications have been established. While regular Cr-Mo electrodes produce weld metal with about 0.08% carbon, the "L-Grades" are limited to a maximum of 0.05% carbon. While the lower percent carbon in the weld metal will improve ductility and lower hardness, it will also reduce the high-temperature strength and creep resistance of the weld metal.

Since all Cr-Mo electrodes produce weld metal which will harden in still air, both preheat and PWHT are required for most applications.

No minimum notch toughness requirements have been established for any of the Cr-Mo electrode classifications. While it is possible to obtain Cr-Mo electrodes with minimum toughness values at ambient temperatures down to 32°F (0°C), specific values and testing must be agreed to by the supplier and the purchaser.

A7.1.2.1 E701Y-B2L and E801Y-B3L Electrodes. In previous revisions of ANSI/AWS A5.5, electrodes classified in this standard as E701Y-B2L were classified as E801Y-B2L. Likewise, electrodes herein classified as E801Y-B3L were classified as E901Y-B3L. The composition ranges were not changed from A5.5-81 to this standard for the corresponding classifications. The strength designations and room tem-

TABLE A3
TYPICAL BASE METAL APPLICATIONS FOR Cr-Mo STEEL ELECTRODES

AWS Classification	%Cr	%Mo	Typical Base Metals
E701Y-B2L	1¼	½	Thin wall A335-P11 Pipe or tube for use in the as-welded condition, A588 Plate for weathering applications where toughness is not a requirement
E801Y-B1	½	½	A335-P2 Pipe, A387 Gr. 2 Plate
E801Y-B2	1¼	½	A335-P11 Pipe, A387 Gr. 11 Plate
E801Y-B3L	2¼	1	Thin wall A335-P22 Pipe for use in the as-welded condition
E901Y-B3	2¼	1	A335-P22 Pipe, A387 Gr. 22 Plate
E8015-B4L	2	½	A213-87 Gr. T3b Tube*
E8016-B5	½	1	A356-58T Grs. 3 or 4 Castings*
E801Y-B6	5	½	A213-T5 Tube, A335-P5 Pipe
E801Y-B7	7	½	A213-T7 Tube, A335-P7 Pipe
E801Y-B8	9	1	A213-T9 Tube, A335-P9 Pipe
E901Y-B9	9	1	A213-T91 Tube, A335-P91 Pipe, A387 Gr. 91 Plate

NOTE:
Base metals followed by an asterisk (*) are no longer listed as grades in the current ASTM specification.

perature strength requirements after postweld heat-treatment have been reduced to reflect the fact that commercial products have been producing marginal tensile strength results in classification tests over many years. The base metals with which these classifications are generally used have lower strength requirements than were reflected by the former electrode classifications. Therefore, unless the higher strength indicated by the former classifications of these electrodes is specifically necessary for a particular welding procedure, the E701Y-B2L classifications of this standard should be considered as identical to the corresponding E801Y-B2L classifications of A5.5-81. Likewise, the E801Y-B3L classifications of this standard should be considered as identical to the E901Y-B3L classifications of A5.5-81.

A7.1.2.2 E901Y-B9 Electrodes. E901Y-B9 is a 9% Cr - 1% Mo, low-hydrogen electrode modified with niobium (columbium) and vanadium designed to provide improved creep strength, toughness, fatigue life, and oxidation and corrosion resistance at elevated temperatures. Due to the higher elevated temperature properties of this alloy, components that are now fabricated from stainless and ferritic steels may be fabricated from a single alloy, eliminating problems associated with dissimilar welds.

In addition to the classification requirements in this specification, either impact toughness or high temperature creep strength properties should be determined. Due to the influence of various levels of carbon and niobium (columbium), specific values and testing must be agreed to by the purchaser and supplier.

A7.1.3 EX01Y-CX and EX01Y-CXL (Ni Steel) Electrodes. These low-hydrogen electrodes have been designed to produce weld metal with increased strength without being air-hardenable or with increased notch toughness at temperatures as low as −175°F (−115°C). They have been specified with nickel contents which fall into five nominal levels of 1% Ni, 1½% Ni, 2½% Ni, 3½% Ni, and 6½% Ni in steel.

With carbon levels of up to 0.12%, strength increases and permits these Ni steel electrodes to be classified as E801Y-CX. However, with lower levels of carbon, low-temperature toughness improves to match the base-metal properties of nickel steels, such as ASTM A203 Gr. E, ASTM A352 LC3 and LC4 classifications. Thus, the intended application and the needed mechanical properties determine whether or not "L-Grades" should be selected.

Many low-alloy steels require postweld heat treatment to stress relieve the weld or temper the weld metal and heat-affected zone to achieve increased ductility. It is often acceptable to exceed the PWHT holding temperatures shown in Table 7. However, for many applications, nickel steel weld metal can be used without

postweld heat treatment. If PWHT is to be specified for a nickel steel weldment, the holding temperature should not exceed the maximum temperature given in Table 7 for the classification considered since nickel steels can be embrittled at higher temperatures.

A7.1.4 E8018-NM1 (Ni-Mo Steel) Electrodes. This low-hydrogen electrode, which contains about 1% nickel and ½% molybdenum, is similar to the Mn-Mo steel electrodes discussed in A7.1.5. However, this electrode can often be welded without PWHT, but the resulting strength and notch toughness are lower than the values obtained with Mn-Mo electrodes. Some typical applications include the welding of high-strength, low-alloy or microalloyed structural steels.

A7.1.5 E(X)X01Y-DX (Mn-Mo Steel) Electrodes. These low-hydrogen electrodes produce weld metal which contains about 1½% manganese and between ⅓ and ⅔% molybdenum. This weld metal provides higher strength and better notch toughness than the C-½% Mo and 1% Ni-½% Mo steel weld metal discussed in A7.1.1 and A7.1.4. However, the weld metal from these Mn-Mo steel electrodes is quite air-hardenable and usually requires preheat and PWHT. The individual electrodes classified under this electrode group have been designed to match the mechanical properties and corrosion resistance of the high-strength, low-alloy pressure vessel steels, such as ASTM A302 Gr. B.

A7.1.6 E(X)XXYY-G (General Low-Alloy Steel) Electrodes. These electrodes are described in A2.2. These electrode classifications may be either modifications of other discrete classifications or totally new classifications. Purchaser and user should determine from the supplier what the description and intended use of the electrode is.

A7.1.7 E(X)X01YM(1) (Military Similar) Electrodes. These low-hydrogen electrodes were originally designed for military applications such as welding HY80 and HY100 type steels. To achieve desired weld-metal properties and soundness, these electrodes have small alloy additions (especially some Ni) and require careful control of moisture in the electrode covering and from other sources of hydrogen. The latter must be maintained during electrode fabrication, packaging, transport, and site storage.

These electrodes are usually employed without subsequent postweld-heat treatment. However, hydrogen-release treatments at lower temperatures (typically less than 500°F) are often applied. In the as-welded condition, the weld-metal mechanical properties include ultimate tensile strength minimums ranging from 90 to 120 ksi (620 to 830 MPa) and good notch toughness at temperatures ranging from 0°F to −60°F (−18°C to −51°C). With these properties, the E(X)X01YM(1) type electrodes are suitable for joining many high-strength, low-alloy or microalloyed steels to themselves or to lower strength steels, including carbon steels.

A7.1.8 EX010-P1 (Pipeline) Electrodes. These electrodes have been designed primarily for welding typical high-strength, pipe butt joints in the vertical welding position with downward or upward progression. With their cellulosic coverings, they produce deep penetrating, spray-type welding arcs and thin, easily removable slag. This combination is best suited for achieving full penetration and radiographic quality for the downhill welding of butt joints when the axis of the pipe is in the horizontal position.

While weld metals produced from these electrodes do not have any minimum chemical composition requirements, the supplier must provide sufficient alloying elements to meet the increased mechanical property requirements. Special emphasis must be placed upon the minimum yield strength values, since most transmission pipeline materials and systems are designed to yield strength limits. Typical application for E7010-P1 and E8010-P1 electrodes is the welding of API-5L-X52 and API-5L-X65 piping assemblies, respectively.

A7.1.9 EX018-WX (Weathering Steel) Electrodes. These low-hydrogen electrodes have been designed to produce weld metal that matches the corrosion resistance and the coloring of the ASTM weathering-type structural steels. These special properties are achieved by the addition of about ½% copper to the weld metal. To meet strength, ductility, and notch toughness in the weld metal, some chromium and nickel additions are also made. These electrodes are used to weld the typical weathering steel, such as ASTM A242 and A588.

A8. Modification of Moisture Test Apparatus

A8.1 Some laboratories have modified test apparatus for determining the moisture content of electrode coverings. The following are some of the modifications which have been successfully used:

A8.1.1 This specification recommends that only nickel boats be used rather than clay boats because lower blank values can be obtained. Some laboratories use zirconium silicate combustion tubes in preference to fused silica or mullite because zirconium silicate will not devitrify or allow the escape of combustible gases at temperatures up to 2500°F (1370°C).

Some combustion tubes are reduced at the exit end, and a separate dust trap is used. This dust trap consists of a 200 mm drying tube filled with glass wool which is inserted between the Schwartz absorption U-tube and the combustion tube. A suitable 300°F (149°C) heater is mounted around the dust trap to keep evolved water from condensing in the trap. The dust trap is filled with glass wool which can be easily inspected to determine when the glass wool should be replaced. An extra spray trap may be installed downstream of the absorption U-tube to ensure that the concentrated sulfuric acid in the gas-sealing bottle is not accidentally drawn into the absorption U-tube.

A8.1.2 On the entrance end of the combustion tube, a pusher rod can be used consisting of a $\frac{1}{8}$ in. (3.2 mm) stainless steel rod mounted in a $\frac{1}{4}$ in. (6.4 mm) copper tee fitting. This is used at the entrance of the combustion tube and permits gradual introduction of the sample into the tube while oxygen is passing over the sample. In this way, any free moisture will not be lost, which can happen if the sample is introduced directly into the hot zone before closing the end of the tube.

A9. Special Tests

A9.1 It is recognized that supplementary tests may be necessary to determine the suitability of these welding electrodes for applications involving properties not considered in this specification. In such cases, additional tests to determine specific properties, such as hardness, corrosion resistance, mechanical properties at higher or lower service temperatures, wear resistance, and suitability for welding combinations of dissimilar metals, may need to be conducted.

A9.2 Diffusible Hydrogen Test. Hydrogen induced cracking of weld metal and the heat-affected zone can be encountered in low-alloy steels welded by the filler metals covered by this specification. Therefore, many of the electrode classifications in this specification are the low-hydrogen type. The diffusible hydrogen test is reintroduced into this specification as an optional supplemental test for low-hydrogen electrodes. However, the diffusible hydrogen test today is considerably improved over the former glycerin test, which appeared first in the original issue of AWS A5.5-48.

The covering moisture test has proved a satisfactory test over many years as a means of assessing the degree of care needed to avoid hydrogen induced cracking. This is, however, an indirect test. Moisture itself does not cause cracking, but the diffusible hydrogen that forms from the moisture and other hydrogen containing compounds (such as machining oil) in the arc causes cracking. Accordingly, the use of optional designators for diffusible hydrogen is introduced to indicate the maximum average value obtained under a clearly defined test condition in ANSI/AWS A4.3, *Standard Methods for Determination of the Diffusible Hydrogen Content of Martensitic, Bainitic, and Ferritic Steel Weld Metal Produced by Arc Welding.*

The user of this information is cautioned that actual welding conditions may result in different diffusible hydrogen values than those indicated by the designator.

The use of a reference atmospheric condition during welding is necessary because the arc always is imperfectly shielded. Moisture from the air, distinct from that in the covering, can enter the arc and subsequently the weld pool, contributing to the resulting observed diffusible hydrogen. This effect can be minimized by maintaining as short an arc length as possible consistent with a steady arc. Experience has shown that the effect of arc length is minor at the H16 level, but is very significant at the H4 level. An electrode meeting the H4 requirement under the reference atmospheric condition may not do so under conditions of higher humidity at the time of welding. This is especially true if a long arc is maintained.

The reference atmospheric condition during welding of the test assembly is 10 grains of water vapor per pound (1.43 g/kg) of dry air. This corresponds to 70°F (21°C) and 10% R.H. on a standard psychometric chart at 29.92 in. Hg (760 mm) barometric pressure. Actual conditions, measured using a sling psychrometer or other suitable device, that equal or exceed this reference condition provide assurance that the conditions during welding will not diminish the final results of the test.

A9.3 Absorbed Moisture Test. The development of low-hydrogen electrode coverings that resist moisture absorption during exposure to humid air is a recent improvement in covered electrode technology. Not all commercial low-hydrogen electrodes possess this characteristic. To assess this characteristic, the absorbed moisture test described in Section 15 was devised. The exposure conditions selected for the test are arbitrary. Other conditions may yield quite different results.

A task group of the AWS A5A Subcommittee evaluated this test and concluded that it can successfully differentiate moisture-resistant electrodes from those which are not. The task group also observed considerable variability of coating moisture results after exposure of electrodes in cooperative testing among several laboratories. The precision of the test is such that, with moisture-resistant electrodes from a single lot, the participating laboratories could observe exposed covering

moisture values ranging, for example, from 0.15% or less to 0.35% or more. The cause of this variability is uncertain at present, but is considered by the task group to be related to variations in the exposure conditions. Because of this variability, the task group concluded that it is not realistic to set a limit for covering moisture of exposed moisture-resistant electrodes lower than 0.4% at this time.

A10. Discontinued Classifications

A number of electrode classifications have been discontinued during the numerous revisions of this specification, reflecting either changes in commercial practice, or changes in the classification system used in the specification. These discontinued electrode classifications are listed in Table A4, along with the year they were last published in this specification. Some discontinued electrode classifications continue to be applied to products even though they have been discontinued from the specification. In this case, the referenced specification year should be the last year that the classification was published in the specification unless the classification was transferred to another current AWS filler metal specification.

A11. Safety Considerations

A11.1 Burn Protection. Molten metal, sparks, slag, and hot-work surfaces are produced by welding, cutting, and allied processes. These can cause burns if precautionary measures are not used. Workers should wear protective clothing made of fire-resistant material. Pant cuffs, open pockets, or other places on clothing that can catch and retain molten metal or sparks should not be worn. High-top shoes or leather leggings and fire-resistant gloves should be worn. Pant legs should be worn over the outside of high-top shoes. Helmets or hand shields that provide protection for the face, neck, and ears, and a head covering to protect the head should be used. In addition, appropriate eye protection should be used.

When welding overhead or in confined spaces, ear plugs to prevent weld spatter from entering the ear canal should be worn in combination with goggles or equivalent to give added eye protection. Clothing should be kept free of grease and oil. Combustible materials should not be carried in pockets. If any combustible substance has been spilled on clothing, a change to clean, fire resistant clothing should be made before working with open arcs or flame. Aprons, cape-sleeves, leggings, and shoulder covers with bibs designed for welding service should be used. Where welding or cutting of unusually thick base metal is involved, sheet-metal shields should be used for extra protection. Mechanization of highly hazardous processes or jobs should be considered.

Other personnel in the work area should be protected by the use of noncombustible screens or by the use of appropriate protection as described in the previous paragraph. Before leaving a work area, hot workpieces should be marked to alert other persons of this hazard. No attempt should be made to repair or disconnect electrical equipment when it is under load. Disconnection under load produces arcing of the contacts and may cause burns or shock, or both. (*Note: Burns can be caused by touching hot equipment such as electrode holders, tips, and nozzles. Therefore, insulated gloves should be worn when these items are handled, unless an adequate cooling period has been allowed before touching.*)

The following sources are for more detailed information on personal protection:

(1) American National Standards Institute. ANSI/ASC Z41.1, *Safety-Toe Footwear.* New York: American National Standards Institute.

(2) —. ANSI/ASC Z49.1, *Safety in Welding and Cutting.* Miami, FL: American Welding Society.

(3) —. ANSI/ASC Z87.1, *Practice for Occupational and Educational Eye and Face Protection.* New York: American National Standards Institute.

(4) Occupational Safety and Health Administration. *Code of Federal Regulations,* Title 29 Labor, Chapter XVII, Part 1910. Washington, D.C.: U. S. Government Printing Office.[5]

A11.2 Electrical Hazards. Electric shock can kill; however, it can be avoided. Live electrical parts should not be touched. The manufacturer's instructions and recommended safe practices should be read and understood. Faulty installation, improper grounding, and incorrect operation and maintenance of electrical equipment are all sources of danger.

All electrical equipment and the workpieces should be grounded. The workpiece lead is not a ground lead. It is used only to complete the welding circuit. A separate connection is required to ground the workpiece. The workpiece should not be mistaken for a ground connection.

The correct cable size should be used, since sustained overloading will cause cable failure and result in possible electrical shock or fire hazard. All electrical connections should be tight, clean, and dry. Poor connections

[5] OSHA documents are available from U. S. Government Printing Office, Washington, D.C. 20402

TABLE A4
DISCONTINUED ELECTRODE CLASSIFICATIONS[a]

AWS Classification	Last A5.5 (ASTM A316) Publication Date	Classification	Last A5.5 (ASTM A316) Publication Date
E7010[b]	1954	E10026	1948
E7011[b]	1954	E10030	1948
E7013	1948	E12015[b]	1954
E7015[c]	1954	E12016[b]	1954
E7016[c]	1954	E7015-C1	1954
E7020[b]	1954	E7016-C1	1954
E7025	1948	E7015-C2	1954
E7026	1948	E7016-C2	1954
E7030	1948	E9010-B3	1954
E8010[b]	1954	E9011-B3	1954
E8011[b]	1954	E9013-B3	1954
E8013[b]	1954	E8010-B1	1958
E8015[b]	1954	E8011-B1	1958
E8016[b]	1954	E8013-B1	1958
E8020	1948	E8015-B1	1958
E8025	1948	E8010-B2	1958
E8026	1948	E8011-B2	1958
E8030	1948	E8013-B2	1958
E9010[b]	1954	E8015-B2	1958
E9011[b]	1954	E8015-B4	1958
E9013[b]	1954	E8016-B4	1958
E9015[b]	1954	E8018-B4	1958
E9016[b]	1954	E8015-C1	1958
E9020	1948	E8015-C2	1958
E9025	1948	E8015-C3	1958
E9026	1948	E9016-D1	1958
E9030	1948	E7018-W[d]	1981
E10010[b]	1954	E8015-B2L[e]	1981
E10011[b]	1954	E8018-B2L[e]	1981
E10013[b]	1954	E8018-NM[f]	1981
E10015[b]	1954	E8018-W[d]	1981
E10016[b]	1954	E9015-B3L[e]	1981
E10020	1948	E9018-B3L[e]	1981
E10025	1948		

NOTES:

a. See Section A10, Discontinued Classifications (in the Annex), for information on discontinued classifications and how they may be used.

b. The higher tensile strength electrode classifications without chemistry requirements for classifications were discontinued in 1958 and replaced with the "G" classifications in order to permit a single classification system with chemistry requirements.

c. Both E7015 and E7016 classifications were transferred to AWS A5.1-58T and continue to be included in the current revision of that specification.

d. Both E7018-W and E8018-W classification designations have been changed to E7018-W1 and E8018-W2 in order to permit the suffix designator to differentiate between the two chemical compositions of undiluted weld metal.

e. These Cr-Mo electrode classifications were down graded to reflect a more realistic minimum tensile strength for low-carbon chromium-molybdenum steel weld metal. This change may or may not show a corresponding reduction in creep strength of the weld metal depending on how the chemical composition of the weld metal is controlled.

f. The E8018-NM classification has been changed to E8018-NM1 to allow for other possible Ni-Mo steel electrode classifications in future revisions.

can overheat and even melt. Further, they can produce dangerous arcs and sparks. Water, grease, or dirt should not be allowed to accumulate on plugs, sockets, or electrical units. Moisture can conduct electricity.

To prevent shock, the work area, equipment, and clothing should be kept dry at all times. Welders should wear dry gloves and rubber-soled shoes, or stand on a dry board or insulated platform. Cables and connections should be kept in good condition. Improper or worn electrical connections may create conditions that could cause electrical shock or short circuits. Worn, damaged, or bare cables should not be used. Open-circuit voltage should be avoided. When several welders are working with arcs of different polarities, or when a number of alternating current machines are being used, the open-circuit voltages can be additive. The added voltages increase the severity of the shock hazard.

In case of electric shock, the power should be turned off. If the rescuer must resort to pulling the victim from the live contact, nonconducting materials should be used. If the victim is not breathing, cardiopulmonary resuscitation (CPR) should be administered as soon as contact with the electrical source is broken. A physician should be called and CPR continued until breathing has been restored, or until a physician has arrived. Electrical burns are treated as thermal burns; that is, clean, cold (iced) compresses should be applied. Contamination should be avoided; the area should be covered with a clean, dry dressing; and the patient should be transported to medical assistance.

Recognized safety standards such as ANSI/ASC Z49.1, *Safety in Welding and Cutting,* and NFPA No. 70, *National Electrical Code,* available from National Fire Protection Association, Batterymarch Park, Quincy, MA 02269, should be followed.

A11.3 Fumes and Gases. Many welding, cutting, and allied processes produce fumes and gases which may be harmful to health. Fumes are solid particles which originate from welding filler metals and fluxes, the base metal, and any coatings present on the base metal. Gases are produced during the welding process or may be produced by the effects of process radiation on the surrounding environment. Management personnel and welders alike should be aware of the effects of these fumes and gases. The amount and composition of these fumes and gases depend upon the composition of the filler metal and base metal, welding process, current level, arc length, and other factors.

The possible effects of over-exposure range from irritation of eyes, skin, and respiratory system to more severe complications. Effects may occur immediately or at some later time. Fumes can cause symptoms such as nausea, headaches, dizziness, and metal fume fever. The possibility of more serious health effects exists when especially toxic materials are involved. In confined spaces, the shielding gases and fumes might displace breathing air and cause asphyxiation. One's head should always be kept out of the fumes. Sufficient ventilation, exhaust at the arc, or both, should be used to keep fumes and gases from your breathing zone and the general area.

In some cases, natural air movement will provide enough ventilation. Where ventilation may be questionable, air sampling should be used to determine if corrective measures should be applied.

Special precautions should be used when welding with the electrodes of the B3, B4, B6, B7, B8, and B9 series. As a group, the fumes from the normal use of these electrodes contain significant amounts of hexavalent chromium (Cr VI) compounds. The permissible exposure limit (PEL) and the threshold limit value (TLV) for Cr VI of 0.05 mg/m^3 as chromium will be exceeded before reaching the 5.0 mg/m^3 threshold limit value for general welding fume. Therefore, for these products, monitoring for hexavalent chromium will be more conservative than monitoring for general welding fume. Short-term effects of excessive overexposure to chromium VI present in fumes may be irritation of the breathing system. Some people may have allergic reactions. Chromium VI is considered a carcinogen by the International Agency for Research on Cancer (IARC) and the National Toxicology Program (NTP). However, evidence from studies involving welding fumes and gases containing chromium compounds do not confirm any carcinogenic risk when exposures are held within OSHA mandated limits.

More detailed information on fumes and gases produced by the various welding processes may be found in the following:

(1) The permissible exposure limits required by OSHA can be found in *Code of Federal Regulations,* Title 29, Chapter XVII, Part 1910.

(2) The recommended threshold limit values for fumes and gases may be found in *Threshold Limit Values for Chemical Substances and Physical Agents in the Workroom Environment,* published by the American Conference of Governmental Industrial Hygienists (ACGIH), 6550 Glenway Avenue, Building D-5, Cincinnati, OH 45211.

(3) The results of an AWS-funded study are available in a report entitled, *Fumes and Gases in the Welding Environment,* available from the American Welding Society.

(4) Manufacturer's Material Safety Data Sheet for the product.

A11.4 Radiation. Welding, cutting, and allied operations may produce radiant energy (radiation) harmful to health. One should become acquainted with the effects of this radiant energy.

Radiant energy may be ionizing (such as x-rays), or nonionizing (such as ultraviolet, visible light, or infrared). Radiation can produce a variety of effects such as skin burns and eye damage, depending on the radiant energy's wavelength and intensity, if excessive exposure occurs.

A11.4.1 Ionizing Radiation. Ionizing radiation is produced by the electron beam welding process. It is ordinarily controlled within acceptance limits by use of suitable shielding enclosing the welding area.

A11.4.2 Nonionizing Radiation. The intensity and wavelengths of nonionizing radiant energy produced depend on many factors, such as the process, welding parameters, electrode and base-metal composition, fluxes, and any coating or plating on the base metal. Some processes such as resistance welding and cold pressure welding ordinarily produce negligible quantities of radiant energy. However, most arc welding and cutting processes (except submerged arc when used properly), laser welding and torch welding, cutting, brazing, or soldering can produce quantities of nonionizing radiation such that precautionary measures are necessary.

Protection from possible harmful effects caused by nonionizing radiant energy from welding include the following measures:

(1) One should not look at welding arcs except through welding filter plates which meet the requirements of ANSI/ASC Z87.1, *Practice for Occupational and Educational Eye and Face Protection,* published by American National Standards Institute. It should be noted that transparent welding curtains are not intended as welding filter plates, but rather are intended to protect a passerby from incidental exposure.

(2) Exposed skin should be protected with adequate gloves and clothing as specified in ANSI/ASC Z49.1, *Safety in Welding, Cutting, and Allied Processes,* published by American Welding Society.

(3) Reflections from welding arcs should be avoided, and all personnel should be protected from intense reflections. (*Note: Paints using pigments of substantially zinc oxide or titanium dioxide have a lower reflectance for ultraviolet radiation.*)

(4) Screens, curtains, or adequate distance from aisles, walkways, etc., should be used to avoid exposing passersby to welding operations.

(5) Safety glasses with UV protective side shields have been shown to provide some beneficial protection from ultraviolet radiation produced by welding arcs.

A11.4.3 Ionizing radiation information sources include the following:

(1) ANSI/AWS F2.1-78, *Recommended Safe Practices for Electron Beam Welding and Cutting,* available from the American Welding Society.

(2) Manufacturer's product information literature.

A11.4.4 The following include nonionizing radiation information sources:

(1) American National Standards Institute. ANSI/ASC Z136.1, *Safe Use of Lasers,* New York, NY: American National Standards Institute.

(2) —. ANSI/ASC Z87.1, *Practice for Occupational and Educational Eye and Face Protection.* New York, NY: American National Standards Institute.

(3) —. ANSI/ASC Z49.1, *Safety in Welding, Cutting, and Allied Processes.* (published by AWS) Miami, FL: American Welding Society.

(4) Hinrichs, J. F. "Project committee on radiation-summary report." *Welding Journal,* January, 1978.

(5) Moss, C. E. "Optical radiation transmission levels through transparent welding curtains." *Welding Journal,* March 1979.

(6) Moss, C. E. and Murray, W. E. "Optical radiation levels produced in gas welding, torch brazing, and oxygen cutting." *Welding Journal,* September 1979.

(7) Marshall, W. J., Sliney, D. H. and others. "Optical radiation levels produced by air-carbon arc cutting processes," *Welding Journal,* March 1980.

(8) National Technical Information Service. Nonionizing radiation protection special study no. 42-0053-77, "Evaluation of the potential hazards from actinic ultraviolet radiation generated by electric welding and cutting arcs." Springfield, VA: National Technical Information Service. ADA-033768.

(9) —. Non-ionizing radiation protection special study no. 42-0312-77, "Evaluation of the potential retina hazards from optical radiation generated by electrical welding and cutting arcs." Springfield, VA: National Technical Information Service, ADA-043023.

SPECIFICATION FOR COVERED COPPER AND COPPER ALLOY ARC WELDING ELECTRODES

SFA-5.6

(Identical with AWS Specification A5.6-84R.)

Scope

This specification prescribes requirements for the classification of covered copper and copper alloy electrodes for shielded metal arc welding. It includes compositions in which the copper content exceeds that of any other element.

Note: No attempt has been made to provide for the classification of all grades of copper and copper alloy welding electrodes. Only the more commonly used have been included.

The values stated in U.S. customary units are to be regarded as the standard. SI units are given as equivalent values to the U.S. customary units. The standard sizes and dimensions in the two systems are not identical, and for this reason, conversion from a standard size or dimension in one system will not always coincide with a standard size or dimension in the other. Suitable conversions, encompassing standard sizes of both can be made, however, if appropriate tolerances are applied in each case.

PART A — GENERAL REQUIREMENTS

1. Classification

1.1 The welding materials covered by this specification are classified on the basis of chemical composition of the undiluted weld metal as specified in Table 1.

1.2 Material classified under one classification shall not be classified under any other classification in this specification.

2. Acceptance

Acceptance of the material shall be in accordance with the provisions of AWS A5.01, *Filler Metal Procurement Guidelines.*

3. Certification

The manufacturer certifies by affixing the marking required in Section 18 that the material, or representative material, has passed the tests required for classification, and that the material meets also all other requirements of this specification.

4. Rounding-Off Procedure

For purposes of determining conformance with this specification, an observed or calculated value shall be rounded to the nearest 1000 psi for tensile and yield strength, and to the "nearest unit" in the last right-hand place of figures used in expressing the limiting value for other quantities in accordance with the rounding-off method given in ASTM E29, *Standard Recommended Practice for Indicating Which Places of Figures are to be Considered Significant in Specified Limiting Values.*

PART B — TESTS, PROCEDURES, AND REQUIREMENTS

5. Summary of Tests

Tests required for each classification are specified in Table 2.

6. Retest

If any test fails to meet its requirement, that specific test must be repeated twice. The results of both tests shall meet the requirement. Specimens for retest may be taken from the original test assembly or from one or two new test assemblies.

TABLE 1
CHEMICAL COMPOSITION REQUIREMENTS FOR UNDILUTED METAL

AWS Classification	UNS Number[c]	Common Name	Composition, Weight, Percent[a,b]											
			Cu Including Ag	Zn	Sn	Mn	Fe	Si	Ni[d]	P	Al	Pb	Tl	Total Other Elements
ECu	W60189	Copper	Remainder	f	f	0.10	0.20	0.10	f	f	0.10	0.02	—	0.50
ECuSi	W60656	Silicon bronze (copper silicon)	Remainder	f	1.5	1.5	0.50	2.4 to 4.0	f	f	0.01	0.02	—	0.50
ECuSn-A	W60518	Phosphor bronze (copper-tin)	Remainder	f	4.0–6.0	f	0.25	f	f	0.05 to 0.35	0.01	0.02	—	0.50
ECuSn-C	W60521		Remainder	f	7.0–9.0	f	0.25	f	f	0.05 to 0.35	0.01	0.02	—	0.50
ECuNi[e]	W60715	Copper nickel (70/30)	Remainder	f	f	1.00–2.50	0.40–0.75	0.50	29.0–33.0	0.020	—	0.02	0.50	0.50
ECuAl-A2	W60614	Aluminum bronze	Remainder	f	f	f	0.50–5.0	1.5	f	—	6.5 to 9.0	0.02	—	0.50
ECuAl-B	W60619	Aluminum bronze	Remainder	f	f	f	2.5–5.0	1.5	f	—	7.5 to 10.0	0.02	—	0.50
ECuNiAl	W60632	Nickel aluminum bronze	Remainder	f	f	0.50–3.5	3.0–6.0	1.5	4.0–6.0	—	6.0 to 8.5	0.02	—	0.50
ECuMnNiAl	W60633	Manganese-nickel aluminum bronze	Remainder	f	f	11.0–13.0	2.0–6.0	1.5	1.0–2.5	—	5.0 to 7.5	0.02	—	0.50

NOTES:
a. Analysis shall be made for the elements for which specific values or an "f" are shown in this table. If, however, the presence of other elements is indicated in the course of routine analysis, further analysis shall be made to determine that the total of these other elements is not present in excess of the limits specified for 'total other elements' in the last column in the table.
b. Single values shown are maximum.
c. SAE/ASTM Unified Number System for Metals and Alloys.
d. Includes cobalt.
e. Sulfur shall be restricted to 0.015 percent for the ECuNi classification.
f. Those elements must be included in total of other elements.

TABLE 2
SUMMARY OF MATERIALS REQUIRED FOR TESTING

AWS Classification	Base Metal[a] (ASTM Specifications and UNS Numbers)		
	Chemical Analysis	Tension Test[b]	Transverse Guided Bend Test[b]
ECu	B152 or B11 C12200	B152 or B11 C12200	B152 or B11 C12200
ECuSi	B96 or B97 C65500	B96 or B97 C65500	B96 or B97 C65500
ECuSn-A	B103 C51100	B103 C51100	B103 C51100
ECuSn-C	B130 C52100	B130 C52100	B130 C52100
ECuNi[c]	B122 C71500	B122 C71500	B122 C71500
ECuAl-A2	B169 C61400	B169 C61400	B169 C61400
ECuAl-B	B148 C95400	B148 C95400	
ECuNiAl	B148 C95800	B148 C95800	B148 C95800[d]
ECuMnNiAl	B148 C95700	B148 C95700	B148 C95700[d]

NOTES:
a. Tests are required only where base metals are designated. All welding for chemical analysis, all-weld-metal tension tests, and transverse guided-side-bend tests shall be done with the test plates in the flat position.
b. When desired, steel, A36 or equivalent, may be substituted for the designated copper alloy. When this is done, surfacing welds shall be applied to the groove faces of the joint. Surfacing shall be accomplished with electrodes of the same classification as those being tested and may be done in the flat position.
c. Groove weld usability tests shall be conducted for the ECuNi classification as per Fig. 3.
d. Bend radius shall be in accordance with 11.

For chemical analysis, retest shall be for the specific element which failed to meet the requirement.

7. Weld Test Assemblies

Two test assemblies are required for all except ECuNi classification. This classification requires three test assemblies as follows:

(1) A weld pad, Fig. 1, for chemical analysis of the undiluted weld metal

(2) A groove weld, Fig. 2, for mechanical properties and soundness of the weld metal

(3) A groove weld, Fig. 3, for usability of ECuNi electrodes

7.1 Weld Pad. Base metal of a convenient size, of the type specified in Table 2, and in the Chemical Analysis Column of Table 2 (including Note b to that Table), shall be used as the base for the weld pad shown in Fig. 1. The surface of the base metal on which the weld metal is deposited shall be clean.

The pad shall be made with multiple passes and layers of weld metal deposited in the flat position. The slag shall be removed after each pass. The temperature of the base metal shall be not less than 60°F (16°C) prior to welding, and the interpass temperature shall not exceed 300°F (150°C). The dimensions of the completed pad shall be as shown in Fig. 1 for each size of electrode. Testing of this assembly shall be as specified in Section 8.

7.2 Groove Weld for Mechanical Properties and Soundness. A test assembly shall be prepared and welded as shown in Fig. 2 using base metal of the appropriate type specified in Table 2 and the Tension test and Bend test columns of Table 2. Testing of this assembly shall be as specified in Sections 9 and 10.

7.3 Groove Weld for Usability Test. A test assembly shall be prepared for electrodes of the ECuNi classification and welded as shown in Fig. 3, using base metal of the appropriate type specified in Table 2 including Notes. The welding position shall be as specified in the Usability test column of Table 3 for the different sizes of electrodes of the ECuNi classification. Testing of the assembly shall be as specified in Section 11.

8. Chemical Analysis

8.1 Details of the test are specified in 8.2 and 8.3.

8.2 Weld deposits or fractured portions of all-weld-metal tension test specimens may be employed for the determination of weld metal chemical analysis. Weld metal shall be deposited in layers in the flat position using the base material specified in Table 2. In case

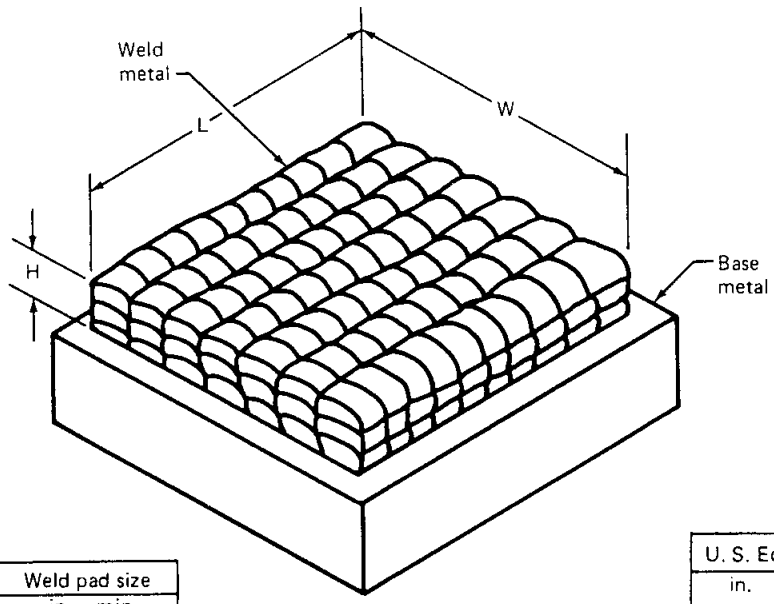

Electrode size	Weld pad size
in.	in. min
3/32 1/8	L = 1-1/2 W = 1-1/2 H = 5/8*
5/32 3/16	L = 2 W = 2 H = 5/8*

*After removal of sample

U. S. Equivalents	
in.	mm
3/32	2.4
1/8	3.2
5/32	4.0
3/16	4.8
1/2	13
5/8	16
1-1/2	40
2	50

FIG. 1 DIMENSIONS OF WELD FOR CHEMICAL ANALYSIS TEST PAD

of dispute, deposit dimensions shall be as specified in Fig. 1.

8.3 Samples for analysis shall be free from all foreign matter. To avoid dilution, a minimum height of $^5/_8$ in. (16 mm) of weld metal shall remain after removal of the sample for analysis.

8.4 Weld metal analysis may be made by any suitable method. In case of dispute, the chemical analysis procedure in the latest edition of the following ASTM specifications shall be the referee method:

E62-XX Photometric Methods for Chemical Analysis of Copper and Copper-Base Alloys

E75-XX Chemical Analysis of Copper-Nickel and Copper-Nickel-Zinc Alloys

9. Radiographic Test

9.1 Radiographic examination for classification is required only for ECuNi electrodes.

9.2 The groove weld for radiographic test shall be made in accordance with Fig. 3. Test assemblies for the $^3/_{32}$ in. (2.4 mm) and $^1/_8$ in. (3.2 mm) electrodes shall be welded in the vertical position. Test assemblies for the $^5/_{32}$ in. (4.0 mm) and $^3/_{16}$ in. (4.8 mm) diameter electrodes shall be welded in the flat position. The groove weld for tensile and bend tests for $^5/_{32}$ in. (4.0 mm) and $^3/_{16}$ in. (4.8 mm) electrodes (Fig. 2) may be radiographed in lieu of the assembly in Fig. 3.

9.3 The test assemblies shall be prepared and evaluated in accordance with 9.3.1, 9.3.2, and 9.3.3.

9.3.1 The weld shall merge smoothly with the surface of the plate. Any reinforcement must be reasonably uniform and shall not exceed $^3/_{32}$ in. (2.4 mm).

9.3.2 In preparation for radiography, the backing strip and any excessive reinforcement shall be removed from the test assembly. Any surface irregularities that might mask or be confused with radiographically re-

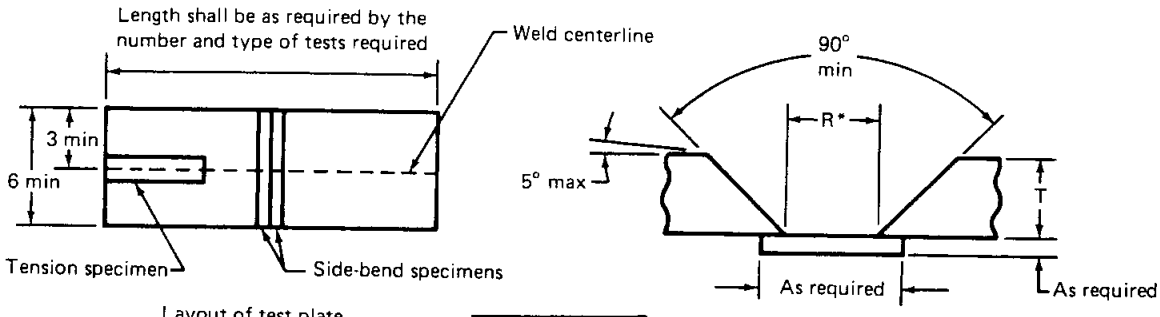

Layout of test plate

U. S. Equivalents	
in.	mm
1/8	3.2
5/32	4.0
1/4	6.4
1/2	12.7
3/4	19
3	75
6	150

Groove preparation of test plate

Electrode size in.	Minimum test plate thickness T in.	Root opening R in.	Number of layers minimum
1/8 and less	1/2	1/4	10
5/32 and larger	3/4	1/2	10

Notes:

1. Weld test plates for all-weld-metal tension and bend specimens shall be prepared using the plate base metal shown in Table 2.

2. The surfaces to be welded shall be clean.

3. Welding shall be performed with the plate in the flat position, using the current values and welding techniques recommended by the electrode manufacturer.

4. Preheat temperature shall be 60°F (16°C) minimum. The interpass temperature shall not exceed 300°F (150°C). For the ECuSi classifications, the interpass temperature shall not exceed 150°F (65°C).

5. The weld metal shall have a maximum bead width equal to six (6) times the core wire diameter. The completed weld shall be at least flush with the surface of the test plate.

6. For the ECuNi classification, the minimum groove angle shall be 60 degrees. The number of layers for the 3/32 in. (2.4 mm) and 1/8 in. (3.2 mm) electrodes shall be recorded and reported. The 5/32 in. (4.0 mm) and 3/16 in. (4.8 mm) electrodes shall have a minimum of 6 layers and maximum of 9 layers.

7. Tests shall be conducted in the as-welded condition.

*R = Tolerance ±1/16 in.

FIG. 2 TEST ASSEMBLY FOR TENSILE AND BEND TEST

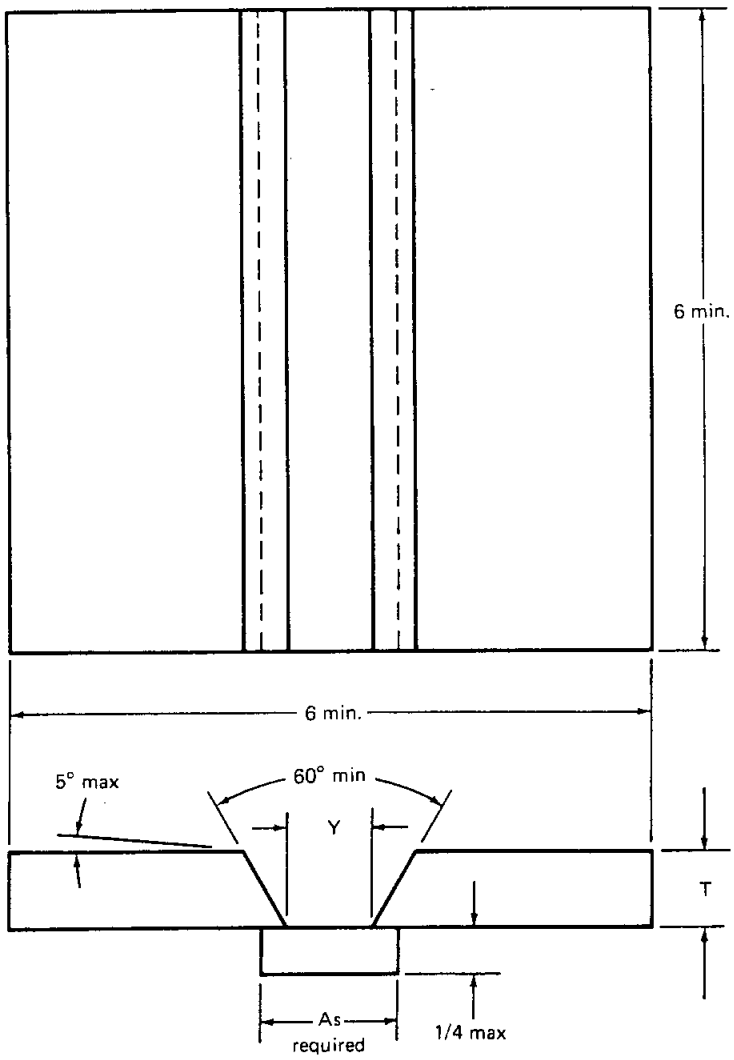

SI Equivalents	
in.	mm
1/16	1.6
5/64	2.0
3/32	2.4
1/8	3.2
5/32	4.0
3/16	4.8
1/4	6.4
5/16	8.0
3/8	9.5
1/2	12.7
6	150

All dimensions except angles are in inches.

Welding conditions

Electrode size, in.	3/32	1/8	5/32	3/16
T = Thickness minimum, in.	1/4	3/8	1/2	1/2
Y = Root opening (± 1/16 in.)	1/4	5/16	3/8	1/2

Notes:
1. Welding shall be conducted in the vertical or flat position as prescribed in 9.2.
2. Base metal shall be in accordance with Table 2.
3. The surfaces to be welded shall be clean.
4. Each weld bead shall contain a start in the area to be evaluated. The weld metal shall have a maximum bead width equal to six (6) times core wire diameter. The root layer for a test of electrodes larger than 1/8 in. (2.4 or 3.2 mm) diameter electrodes may be deposited with a 3/32 or 1/8 in. (2.4 or 3.2 mm) diameter electrodes.
5. The completed weld shall be at least flush with the surface of the test plate.
6. Preheat temperature shall be 60°F (16°C) min. The interpass temperature shall not exceed 300°F (150°C).
7. After completion of the weld, the weld reinforcement and backing strip shall be removed flush with base plate surfaces and the assembly shall be radiographed.

FIG. 3 GROOVE WELD FOR RADIOGRAPHIC TEST (ECuNi ONLY)

TABLE 3
MECHANICAL PROPERTY REQUIREMENTS

AWS Classification	Tensile Strength, Min ksi	Tensile Strength, Min MPa	Elongation in. 4 x D Gage Length, Percent, Min.
ECu	25	170	20
ECuSi	50	350	20
ECuSn-A	35	240	20
ECuSn-C	40	280	20
ECuNi	50	350	20
ECuAl-A2	60	410	20
ECuAl-B	65	450	10
ECuNiAl	72	500	10
ECuMnNiAl	75	520	15

jectable indications shall be removed from the face and root of the weld by any suitable mechanical means.

9.3.3 The weld shall be radiographed in accordance with ASTM Method E142, *Controlling Quality of Radiographic Testing.* The sensitivity level shall be 2-2T.

9.3.4 The usability of the electrode is acceptable if the radiograph shows no cracks, no zones of incomplete fusion, and no rounded indications in excess of those permitted by Figs. 4A, B, C and D according to the thickness of the test assembly. A rounded indication is an indication whose length is no more than three times its width on the radiograph. Rounded indications may be circular, elliptical, conical, or irregular in shape, and they may have tails. The size of a rounded indication is the largest dimension of the indication, including any tail that may be present. Slag indications shall be evaluated as porosity. When evaluating the radiograph, 1 in. (25 mm) on each end of the weld, and rounded indications less than $\frac{1}{64}$ in. (0.4 mm) shall be disregarded.

10. Tension Test

10.1 One all-weld-metal tension test specimen shall be machined from the groove weld described in 7.2 and shown in Fig. 2. The welding shall be done in the flat position, as stated in Table 2. Tension tests shall be conducted in the as-welded condition and in accordance with the tension test section of the latest edition of AWS B4.0. *Standard Methods for Mechanical Testing of Welds.* Test specimen dimensions shall be as shown in Fig. 5.

11. Bend Test

11.1 Test specimens shall be prepared in accordance with Fig. 2.

11.2 When required in Table 2, test specimens (in the as-welded condition) shall be bent in conformance with the side-bend test sections of the latest edition of AWS B4.0, *Standard Methods for Mechanical Testing of Welds.* A $\frac{3}{8}$ in. (9.5 mm) thick specimen shall be uniformly bent through 180 degrees over $\frac{3}{4}$ in. (19 mm) radius in any suitable jig except that ECuAl-A2, ECuNiAl and ECuMnNiAl specimens shall be uniformly bent using the radius specified in Fig. 6. Positioning of the specimens for bending shall be such that the welded joint will conform to this radius after bending. The side of the bend with the greater discontinuities, if any, shall be in tension, and the weld shall be at the center of the bend. Figures 7A and 7B show two typical bending jigs from the latest edition of AWS B4.0 and are dimensioned for bending a $\frac{3}{8}$ in. (9.5 mm) thick specimen over a 2T radius.

11.3 After bending in accordance with 11.2, the convex surface of the transverse guided-side-bend test specimens shall exhibit no cracks or open discontinuities in the weld metal exceeding $\frac{1}{8}$ in. (3 mm) measured in any direction. Small checks or cracks at the edges of the test specimen shall be disregarded.

11.3.1 The guided-bend test jig. Fig. 7B is recommended when steel is used as base metal for the test assembly (see Table 2, Note b).

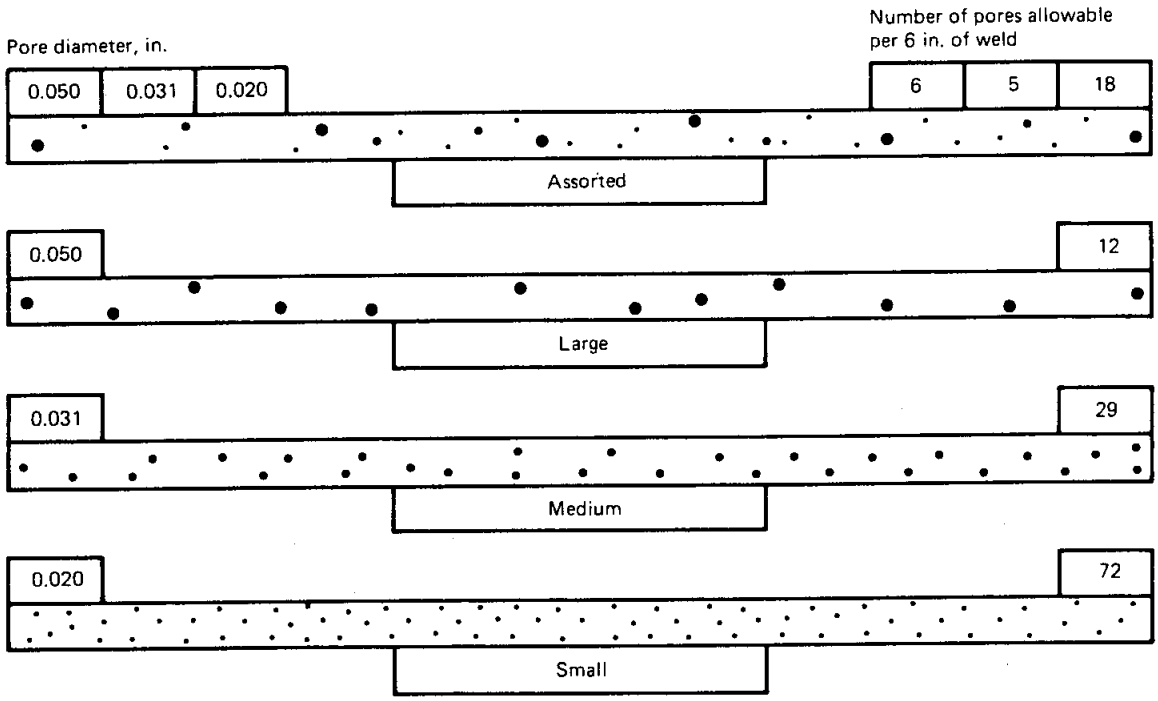

SI Equivalents	
in.	mm
0.020	0.51
0.031	0.79
0.050	1.27
1/4	6.4
6	150

Note: In using these porosity standards, the chart which is most representative of the size of porosity present in the test specimen radiograph shall be used for determining conformance to these Radiographic Acceptance Standards.

FIG. 4A ACCEPTANCE STANDARD FOR ¼ in. (6.4 mm) TEST PLATE

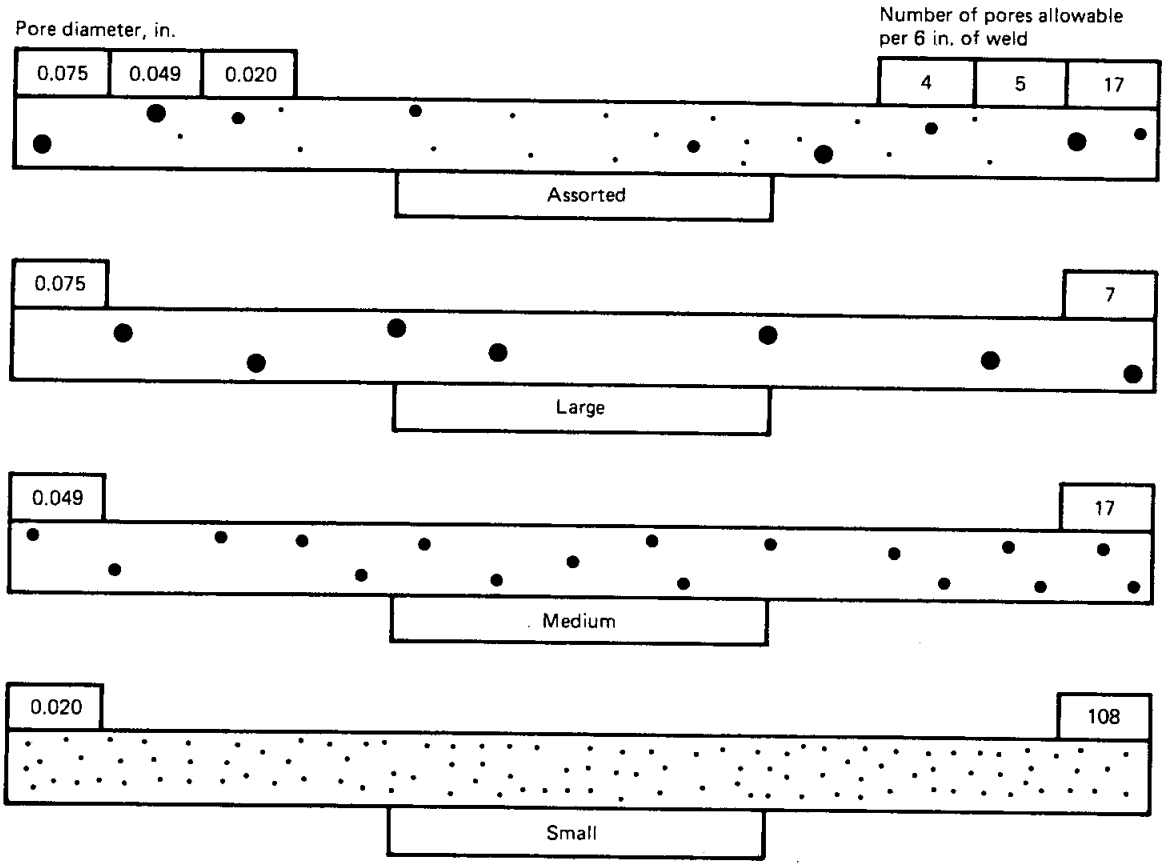

SI Equivalents	
in.	mm
0.020	0.51
0.049	1.25
0.075	1.90
3/8	9.5
6	150

Note: In using these porosity standards, the chart which is most representative of the size of porosity present in the test specimen radiograph shall be used for determining conformance to these Radiographic Acceptance Standards.

FIG. 4B ACCEPTANCE STANDARD FOR $\frac{3}{8}$ in. (9.5 mm) TEST PLATE

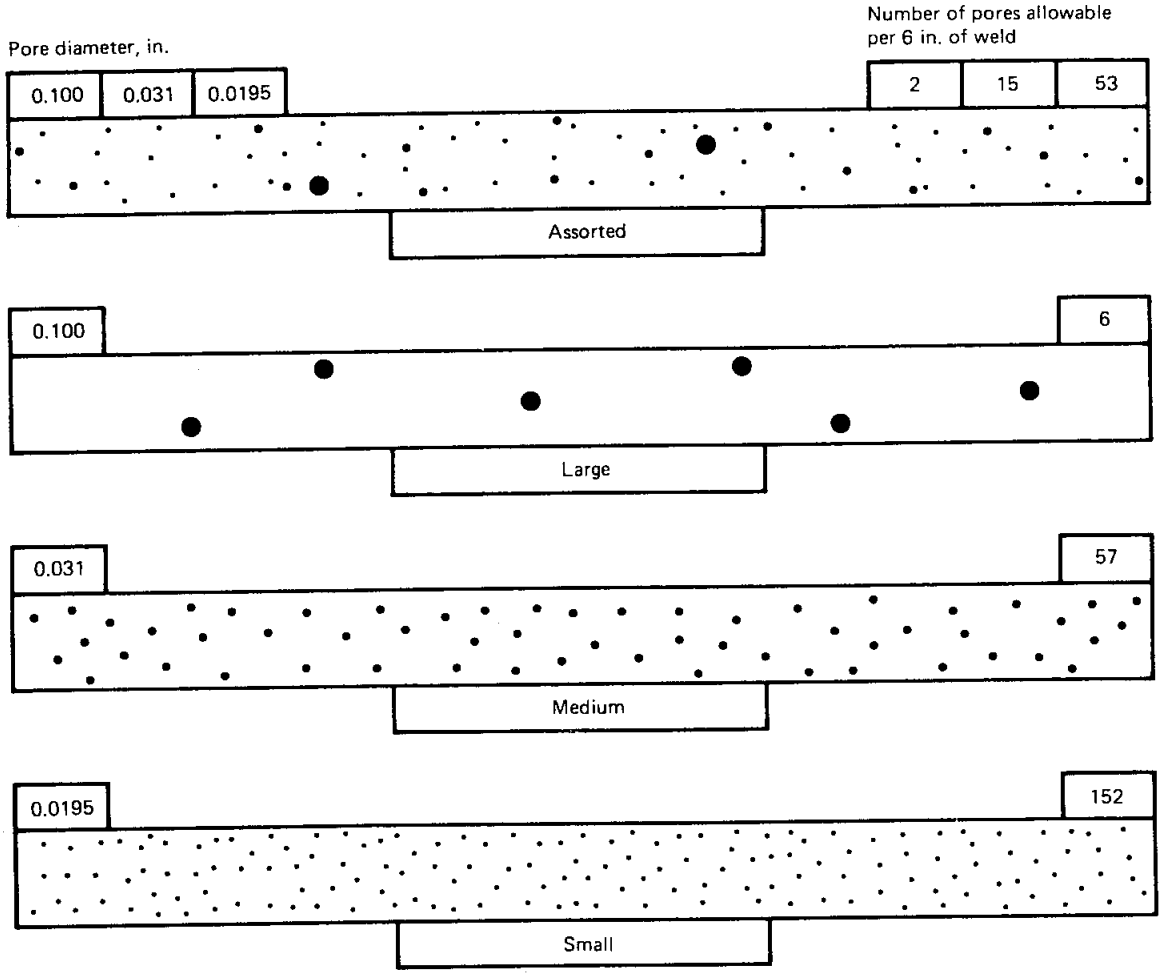

SI Equivalents	
in.	mm
0.0195	0.495
0.031	0.79
0.100	2.54
1/2	12.7
6	150

Note: In using these porosity standards, the chart which is most representative of the size of porosity present in the test specimen radiograph shall be used for determining conformance to these Radiographic Acceptance Standards.

FIG. 4C ACCEPTANCE STANDARD FOR ½ in. (12.7 mm) TEST PLATE

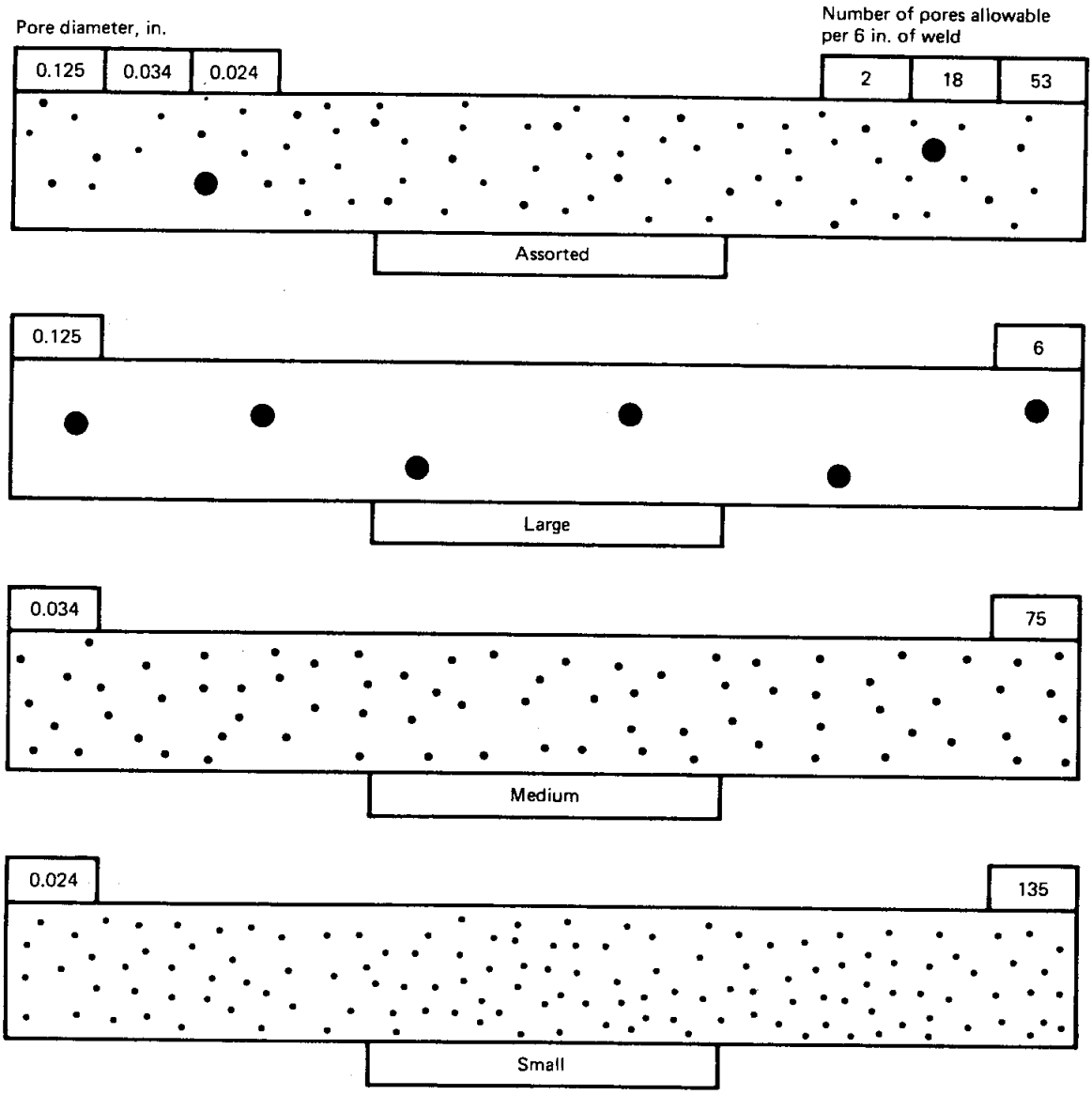

SI Equivalents	
in.	mm
0.024	0.61
0.034	0.86
0.125	3.18
3/4	19

Note: In using these porosity standards, the chart which is most representative of the size of porosity present in the test specimen radiograph shall be used for determining conformance to these Radiographic Acceptance Standards.

FIG. 4D ACCEPTANCE STANDARD FOR $^{3}/_{4}$ in. (19 mm) TEST PLATE

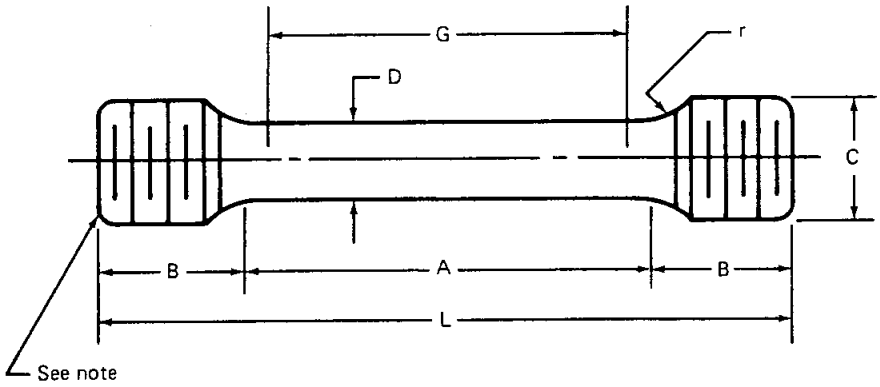

SI Equivalents	
in.	mm
0.005	0.13
0.010	0.30
1/4	6.4
3/8	9.5
1/2	12.7
0.505	12.8
3/4	19
7/8	22
1	25
1-1/4	32
1-3/8	34
2-1/4	57
3	75
5	125

Standard dimensions, in.		
	(A) 0.505 Specimen	(B) 0.252 Specimen
G = Gage length	2.000 ± 0.005	1.000 ± 0.005
D = Diameter	0.505 ± 0.010	0.252 ± 0.005
r = Radius of fillet	3/8 min	3/16 min
A = Length of reduced section	2-1/4 min	1-1/4 min
L = Overall length	5 approx	3 approx
B = Length of end section	1-3/8 approx	7/8 approx
C = Diameter of end section	As required	As required

Note: End sections may or may not be threaded. Threads, when employed, should be machined to fit available fixtures.

FIG. 5 ALL-WELD-METAL TENSION TEST SPECIMEN DIMENSIONS

PART C — MANUFACTURE, IDENTIFICATION, AND PACKAGING

12. Method of Manufacture

The welding materials classified by this specification may be made by any method yielding product conforming to the requirements of this specification.

13. Standard Sizes and Lengths

Standard sizes and lengths of electrodes shall be as shown in Tables 4 and 5. In all cases, standard size refers to the diameter of the core wire.

14. Core Wire and Covering

14.1 Diameter of the core wire shall not vary more than ±0.003 in. (±0.08 mm) from the standard size specified. Length shall not vary more than $\pm^3/_8$ in. (±10 mm).

14.2 The core wire and covering shall be concentric to the extent that the maximum core-plus-one covering dimension shall not exceed the minimum core-plus-one covering dimensions by more than 7 percent of the mean dimension for $^3/_{32}$ in. (2.4 mm); 5 percent of the mean dimension for sizes $^1/_8$ and $^5/_{32}$ in. (3.2 and 4.0 mm); and 4 percent of the mean dimension for $^3/_{16}$ in. (4.8 mm). The concentricity may be measured by any suitable means.

14.3 Core wire and covering shall be free of defects which would interfere with uniform performance of the electrode.

15. Exposed Core

15.1 The exposed core on the grip end (for making contact with the electrode holder) shall be as shown in Table 6.

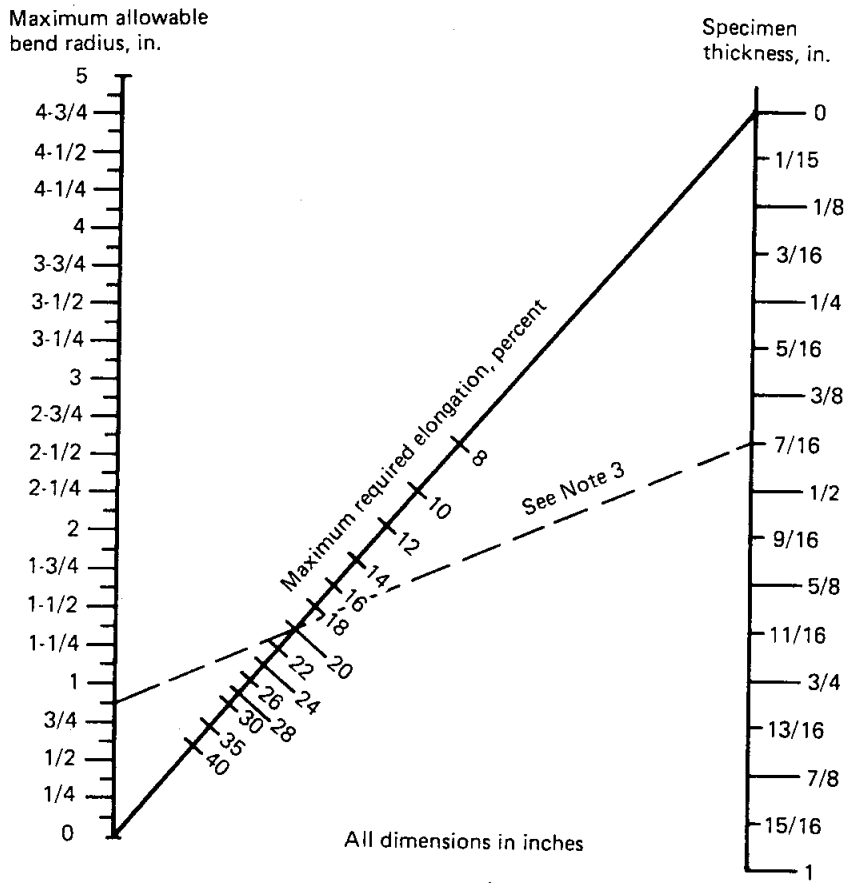

SI equivalents	
in.	mm
1/16	1.6
1/8	3.2
3/16	4.8
1/4	6.4
5/16	7.9
3/8	9.5
7/16	11.1
1/2	12.7
9/16	14.3
5/8	15.9
11/16	17.5
3/4	19
13/16	21
7/8	22
15/16	24
1	25
1-1/4	32
1-1/2	38
1-3/4	44
2	51
2-1/4	57
2-1/2	64
2-3/4	70
3	76
3-1/4	83
3-1/2	89
3-3/4	95
4	102
4-1/4	108
4-1/2	115
4-3/4	121
5	127

Notes:
1. In general, it is recommended that the specimen thickness for the bend tests be approximately 3/8 in. (9.5 mm). However, the specimen thickness may be any value within the range given above.
2. Required accuracy of measurement is as follows:
(a) Specimen thickness: ±1/64 in. (0.4 mm).
(b) Bend radius: ±1/16 in. (1.6 mm).
3. Example: a standard requires a minimum elongation of 20 percent. Thus, if a 7/16 in. (11.1 mm) thick specimen is desired, a line is drawn between these two points and extended to determine the appropriate bend radius, which would be 7/8 in. (22 mm).
4. When applying the nomogram data, it is considered satisfactory to use the 20 percent elongation fixtures (dies) for any metal over 20 percent elongation.
5. The minimum required elongation is that specified in Table 3.

FIG. 6 NOMOGRAM FOR SELECTING MAXIMUM BEND RADIUS FOR ALLOWABLE SPECIMEN THICKNESS (FOR CLASSIFICATIONS ECuAl-A2, ECuNiAl AND ECuMnNiAl)

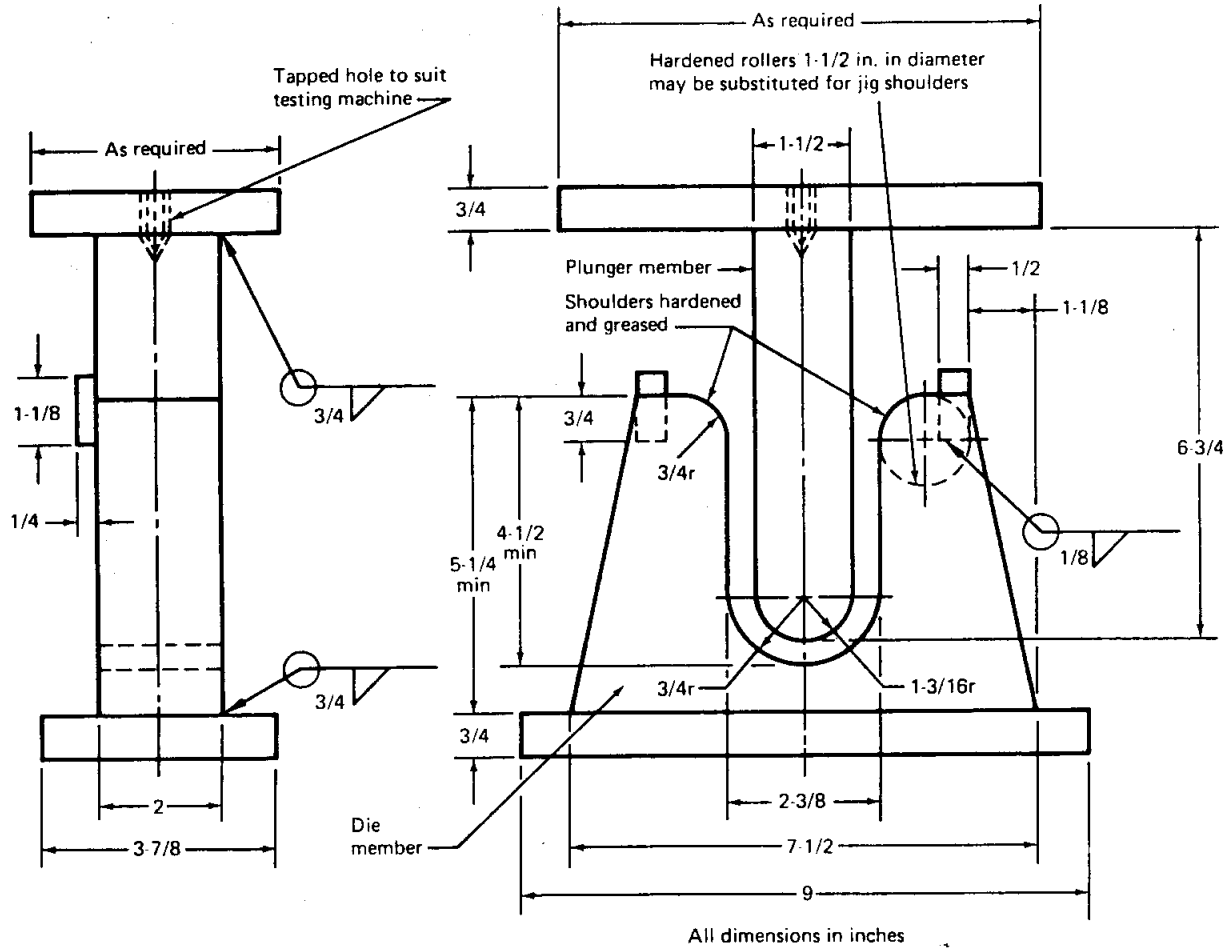

Notes:
1. The dimensions of this guided-bend test jig are in accordance with AWS B4.0-76, *Standard Methods for Mechanical Testing of Welds*.
2. The side of the specimen turned toward the die shall be the side with the greater discontinuities.
3. r = radius; all dimensions are in inches.

SI Equivalents	
in.	mm
1/8	3.2
1/4	6.4
1/2	12.7
3/4	19
1-1/8	28.6
1-3/16	30
1-1/2	38
2	51
2-3/8	60
3-7/8	98
4-1/2	113
5-1/4	133
6-3/4	171
7-1/2	191
9	229

FIG. 7A GUIDED-BEND TEST JIG

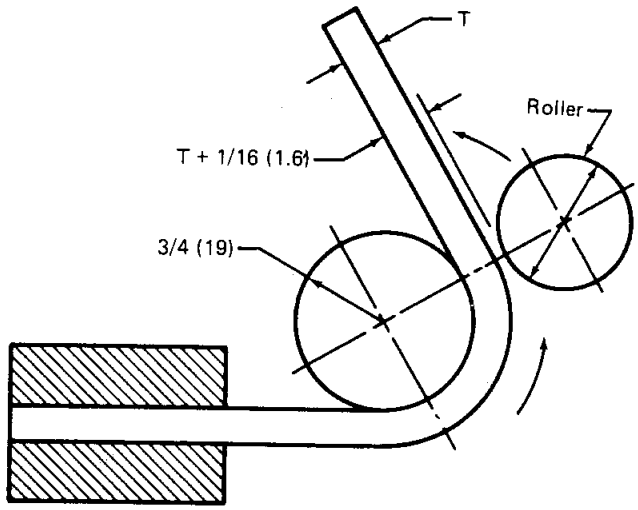

Notes:
1. Dimensions not shown are the option of the designer. It is essential to have adequate rigidity so that the jig parts will not spring.
2. The specimen shall be firmly clamped on one end so that it does not slide during the bending operation. The weld and heat-affected zone in the case of the transverse weld bend specimens shall be completely within the bent portion of the specimen after testing.
3. Test specimens shall be removed from the jig when the outer roll has been rotated 180 degrees from the starting point.
4. When using the wraparound jig, the side of the specimen turned toward the roller shall be the side with the greater discontinuities.

FIG. 7B ALTERNATE GUIDED-BEND TEST JIG

TABLE 4
STANDARD SIZES OF ELECTRODES

AWS Classification	Standard Sizes, Diameter of Core Wire, in. (mm)			
	3/32 (2.4)	1/8 (3.2)	5/32 (4.0)	3/16 (4.8)
ECu, ECuSi, ECuSn-A, ECuSn-C, ECuNi	X	X	X	X
ECuAl-A2	X	X	X	X
ECuAl-B	—	X	X	X
ECuNiAl	—	X	X	X
ECuMnNiAl	X	X	X	X

TABLE 5
STANDARD LENGTHS OF ELECTRODES

Diameter of Core Wire		Standard Length	
in.	mm	in.	mm
3/32 (0.093)	2.4	9 and 12	230 and 300
1/8 (0.125), 5/32 (0.156), 3/16 (0.187)	3.2, 4.0, 4.8	14	350

15.2 The arc end of each electrode shall be sufficiently bare and the covering sufficiently tapered to permit easy striking of the arc. The covering shall cover the core wire for at least one-half of the circumference of the electrode at a distance of two-thirds the diameter of the core wire, or 3/32 in. (2.4 mm), whichever is smaller.

TABLE 6
EXPOSED CORE ON GRIP END OF THE ELECTRODE

Electrode Diameter		Bare Portion (minimum)		Distance From Grip End to Full Thickness of Covering (maximum)	
in.	mm	in.	mm	in.	mm
5/32 and smaller	4.0	1/2	13	1 1/4	30
3/16	4.8	3/4	19	1 1/2	40

16. Electrode Identification

All electrodes shall be identified as follows:

16.1 At least one legible imprint of the AWS classification shall be applied to the electrode covering within 2½ in. (65 mm) of the grip end of the electrode.

16.2 The number and letters of the imprint shall be of bold block type of a size large enough to be legible.

16.3 The ink used for imprinting shall provide sufficient contrast with the electrode covering so that the numbers and letters are legible, both before and after welding as it is normally done.

16.4 The prefix letter E in the electrode classification may be omitted from the imprint.

17. Packaging

17.1 Welding materials shall be packaged to protect against damage during shipment and storage under normal conditions.

17.2 Standard packages shall be as agreed upon between the supplier and purchaser.

18. Package Marking

18.1 The following product information (as a minimum) shall be legibly marked so as to be visible from the outside of each unit package:

18.1.1 AWS specification and classification numbers. (Year of issue may be excluded.)

18.1.2 Supplier's name and trade designation.

18.1.3 Standard size and net weight.

18.1.4 Lot, control, or heat number.

18.2 All packages of welding materials, including individual unit packages enclosed within a larger package, shall carry (as a minimum) the following precautionary information prominently displayed in legible type:

WARNING: Protect yourself and others. Read and understand this information.

FUMES AND GASES can be dangerous to your health. ARC RAYS can injure eyes and burn skin. ELECTRIC SHOCK can kill.

- **Read and understand the manufacturer's instructions and your employer's safety practices.**
- **Keep your head out of the fumes.**
- **Use enough ventilation, exhaust at the arc, or both to keep fumes and gases away from your breathing zone, and the general area.**
- **Wear correct eye, ear, and body protection.**
- **Do not touch live electrical parts.**
- **See American National Standard Z49.1 *Safety in Welding and Cutting* published by the American Welding Society, 550 N.W. LeJeune Rd., P.O. Box 351040, Miami, Florida 33135; OSHA Safety and Health Standards, 29 CFR 1910, available from U.S. Government Printing Office, Washington, DC 20402.**

Appendix
Guide to AWS Classification of Copper and Copper Alloy Arc Welding Electrodes

(This Appendix is not a part of AWS A5.6-84 *Specification for Covered Copper and Copper Alloy Arc Welding Electrodes,* but is included for information only.)

A1 Introduction

A1.1 The specification itself is intended to provide both the manufacturer and the purchaser of copper and copper alloy welding electrodes with a means of production control and a basis of acceptance through mutually acceptable, sound, standard requirements.

A1.2 This guide has been prepared as an aid to prospective users of the copper and copper alloy electrodes covered by this specification in determining which classification of electrode is best suited for a particular application, with due consideration to the particular requirements for that application. Each of the basic classification groups is discussed in the parts of this guide that follow.

A1.3 Tests for hardness are not included in this specification. For reference, however, a chart of typical hardness values is included as Table A1.

A1.4 It is recognized that supplementary tests may be necessary to determine the suitability of these electrodes for applications involving properties not considered in this specification. In such cases, additional tests to determine such specific properties as corrosion resistance, mechanical properties at low and high temperatures, and suitability for welding combinations of dissimilar metals may be required upon agreement between the purchaser and supplier.

TABLE A1
HARDNESS OF COPPER AND COPPER ALLOY WELD METAL DEPOSITED USING COVERED ELECTRODES

AWS Classification	Brinell Hardness	
ECu	20 to 40	Rockwell F
ECuSi	80 to 100	(500 kg load)
ECuSn-A	70 to 85	(500 kg load)
ECuSn-C	85 to 100	(500 kg load)
ECuNi	60 to 80	(500 kg load)
ECuAl-A2	130 to 150	(3000 kg load)
ECuAl-B	140 to 180	(3000 kg load)
ECuNiAl	160 to 200	(3000 kg load)
ECuMnNiAl	160 to 200	(3000 kg load)

NOTE: Hardness values as listed above are average values for undiluted weld metal deposited in accordance with the specification. This table is included for information only, hardness testing is not required under this specification.

A2 Method of Identification

A2.1 The system for identifying the electrode classifications is as follows:

A2.1.1 The letter E at the beginning of each number indicates a covered electrode.

A2.1.2 The chemical symbol Cu is used to identify the electrodes as copper-base alloys, and the additional chemical symbol, such as Si in ECuSi, Sn in ECuSn, etc., indicates the principal alloying element of each classification or group of similar classifications. Where more than one classification is included in a basic group, the individual classifications in the group are identified by the letters A, B, C, etc., as in ECuSn-A. Further subdividing is done by using a 1, 2, etc., after the last letter, as the 2 in ECuAl-A2.

A3 Ventilation During Welding

A3.1 Five major factors govern the quantity of fumes in the atmosphere to which welders and welding operators are exposed during welding. These are:

A3.1.1 Dimensions of the space in which welding is done (with special regard to the height of the ceiling).

A3.1.2 Number of welders and welding operators working in that space.

A3.1.3 Rate of evolution of fumes, gases, or dust, according to the materials and processes involved.

A3.1.4 The proximity of the welder or welding operator to the fumes as they issue from the welding zone, and to the gases and dusts in the space in which the welder or welding operator is working.

A3.1.5 The ventilation provided to the space in which the welding is done.

A3.2 American National Standard Z49.1, *Safety in Welding and Cutting* (published by the American Welding Society), discusses the ventilation that is required during the welding, and should be referred to for details. Attention is particularly drawn to the Section of that document entitled "Ventilation."

A4 Description and Intended Use of Filler Metal

A4.1 Copper and copper alloy covered electrodes generally operate with dcep and the coverings often are hygroscopic.

A4.1.1 The supplier should be consulted regarding:

(a) Specific operating parameters and positions

(b) Recommended storage conditions and reconditioning temperatures

A4.1.2 The weld area shall be free from moisture and other contaminants.

A4.2 ECu Classification (Copper Electrodes). ECu electrodes are generally manufactured from deoxidized copper wire (essentially pure copper with small amounts of deoxidizers added) and may be used for shielded metal arc welding of deoxidized coppers, oxygen-free coppers, and tough pitch (electrolytic) coppers. The electrodes are also used to repair or surface these base metals as well as to surface steel and cast iron. Mechanically and metallurgically sound joints can best be made in deoxidized coppers. Reactions with hydrogen in oxygen-free copper, and the segregation of copper oxide in tough pitch copper may detract from joint efficiency. However, when highest quality is not required, ECu electrodes may be successfully used on these base metals. ECu electrodes may also be used for clad restoration on copper-clad vessels if precautions are taken to minimize dilution effects. Preheats to 1000°F (540°C) may be required.

A4.3 ECuSi Classification (Silicon Bronze). ECuSi electrodes contain approximately three percent silicon plus small percentages of manganese and tin. They are used primarily for welding copper-silicon alloys. ECuSi electrodes are occasionally used for the joining of copper, dissimilar metals, and some iron-base metals. Silicon bronze weld metal seldom is used to surface bearing surfaces, but often is used to surface areas subjected to corrosion.

A4.4 ECuSn Classification (Phosphor Bronze). ECuSn electrodes are used to join phosphor bronzes of similar compositions. They are also useful for joining brasses and, in some cases, for welding them to cast iron and carbon steel.

ECuSn weld metals tend to flow sluggishly, requiring preheat and interpass temperatures of at least 400°F (205°C) on heavy sections. Postweld heat treatment may not be necessary, but it is desirable for maximum ductility, particularly if the weld metal is cold worked.

A4.4.1 ECuSn-A electrodes are used primarily to join base metal of similar composition. They also may be used to weld copper if the resultant weld metal has adequate electrical conductivity and corrosion resistance for the specific application.

A4.4.2 ECuSn-C electrodes have higher tin content resulting in weld metals of higher hardness, tensile and yield strength than ECuSn-A weld metal.

A4.5 ECuNi Classification (Copper-Nickel). Electrodes of the ECuNi classification are used for shielded metal arc welding of wrought or cast $^{70}/_{30}$, $^{80}/_{20}$, and $^{90}/_{10}$ copper-nickel alloys to themselves or to each other. They also are used for welding the clad side of copper-nickel clad steel. Preheating generally is not necessary.

A4.6 ECuAl Classification (Aluminum Bronze)

A4.6.1 The copper-aluminum electrodes are used only in the flat position. For butt joints, a 90 degree single V-groove is recommended for plate thicknesses up to and including $^{7}/_{16}$ in. (11 mm), and a modified U- or double V-groove is recommended for the heavier plate thicknesses. Preheat and interpass temperature should be as follows:

A4.6.1.1 For iron-base materials, 200 to 300°F (95 to 150°C).

A4.6.1.2 For bronzes, 300 to 400°F (150 to 210°C).

A4.6.1.3 For brasses, 500 to 600°F (260 to 315°C).

A4.6.2 ECuAl-A2 electrodes are used in joining aluminum bronzes of similar composition, high strength copper-zinc alloys, silicon bronzes, manganese bronzes, some nickel alloys, many ferrous metals and alloys, and combinations of dissimilar metals. The weld metal is also suitable for surfacing wear- and corrosion-resistant bearing surfaces.

A4.6.3 ECuAl-B electrodes deposit weld metal having higher tensile strength, yield strength, and hardness with a correspondingly lower ductility than ECuAl-A2 weld metal. ECuAl-B electrodes are used for repairing aluminum bronze and other copper alloy castings. ECuAl-B weld metal also is used for high strength surfacing of wear- and corrosion-resistant bearing surfaces.

A4.6.4 ECuNiAl electrodes are used to join or repair cast or wrought nickel-aluminum bronze materials. These weld metals also may be used for applications requiring high resistance to corrosion, erosion, or cavitation in salt and brackish water.

A4.6.5 ECuMnNiAl electrodes are used to join or repair cast or wrought manganese-nickel-aluminum bronze materials. These weld metals exhibit excellent resistance to corrosion, erosion and cavitation.

SPECIFICATION FOR COPPER AND COPPER ALLOY BARE WELDING RODS AND ELECTRODES

SFA-5.7

(Identical with AWS Specification A5.7-84R.)

Scope

This specification prescribes requirements for the classification of copper and copper alloy bare welding rods and electrodes for plasma arc, gas metal arc, and gas tungsten arc welding.[1] It includes compositions in which the copper content exceeds that of any other element.

Note: No attempt has been made to provide for classification of all grades of copper and copper alloy filler metals; only the more commonly used have been included.

The values stated in U.S. customary units are to be regarded as the standard. The SI units are given as equivalent values to the U.S. customary units. The standard sizes and dimensions in the two systems are not identical, and for this reason conversion from a standard size or dimension in one system will not always coincide with a standard size or dimension in the other. Suitable conversions, encompassing standard sizes of both can be made, however, if appropriate tolerances are applied in each case.

PART A — GENERAL REQUIREMENTS

1. Classification

The welding materials covered by this specification are classified according to their chemical composition as specified in Table 1. Materials classified under one classification shall not be classified under any other classification of this specification.

2. Acceptance

Acceptance of the material shall be in accordance with the provisions of AWS A5.01. *Filler Metal Procurement Guidelines.*

[1] These filler metals may be used with other welding processes for which they are found suitable.

3. Certification

For all material furnished under this specification, the manufacturer certifies (by affixing the marking required in Section 16) that the material or representative material, has passed the tests required for classification, and that the material meets all other requirements of this specification.

4. Rounding-Off Procedures

For purposes of determining conformance with this specification, an observed or calculated value shall be rounded to the "nearest unit" in the last right-hand place of figures used in expressing the limiting value quantities in accordance with the rounding-off method given in ASTM E29, *Recommended Practice for Indicating Which Places of Figures are to be Considered Significant in Specified Limiting Values.*

PART B — TESTS, PROCEDURES, AND REQUIREMENTS

5. Summary of Required Tests

Chemical analysis of the filler metal itself (or the stock from which it is made) is the only test required for classification of a product under this specification.

6. Retests

If any test fails to meet its requirement, that specific test must be repeated twice. The results of both tests shall meet the requirement.

For chemical analysis, retest shall be for the specific element(s) which failed to meet the requirement.

TABLE 1
CHEMICAL COMPOSITION REQUIREMENTS, PERCENT

AWS Classification	UNS Number[d]	Common Name	Composition, Weight Percent[a,b,c]											
			Cu Including Ag	Zn	Sn	Mn	Fe	Si	Ni Including Co	P	Al	Pb	Ti	Total Other Elements
ERCu	C18980	Copper	98.0 min	—	1.0	0.50	—	0.50	—	0.15	0.01	0.02	—	0.50
ERCuSi-A	C65600	Silicon bronze (copper-silicon)	Remainder	1.0	1.0	1.5	0.50	2.8–4.0	—	—	0.01	0.02	—	0.50
ERCuSn-A	C51800	Phosphor bronze (copper-tin)	Remainder	—	4.0–6.0	—	—	—	—	0.10–0.35	0.01	0.02	—	0.50
ERCuNi[e]	C71580	Copper-nickel	Remainder	—	—	1.00	0.40–0.75	0.25	29.0–32.0	0.02	—	0.02	0.20 to 0.50	0.50
ERCuAl-A1	C61000	Aluminum bronze	Remainder	0.20	—	0.50	—	0.10	—	—	6.0–8.5	0.02	—	0.50
ERCuAl-A2	C61800		Remainder	0.02	—	—	1.5	0.10	—	—	8.5–11.0	0.02	—	0.50
ERCuAl-A3	C62400		Remainder	0.10	—	—	2.0–4.5	0.10	—	—	10.0–11.5	0.02	—	0.50
ERCuNiAl	C63280	Nickel-aluminum bronze	Remainder	0.10	—	0.60–3.50	3.0–5.0	0.10	4.0–5.50	—	8.50–9.50	0.02	—	0.50
ERCuMnNiAl	C63380	Manganese-nickel aluminum bronze	Remainder	0.15	—	11.0–14.0	2.0–4.0	0.10	1.5–3.0	—	7.0–8.5	0.02	—	0.50

NOTES:

a. Analysis shall be made for the elements for which specific values are shown in this table. If, however, the presence of other elements is indicated in the course of routine analysis, further analysis shall be made to determine that the total of these other elements is not present in excess of the limits specified for 'Total other elements' in the last column in this table.

b. Single values shown are maximum, unless otherwise noted.

c. Classifications RBCuZn-A, RCuZn-B, RCuZn-C, and RBCuZn-D now are included in A5.27-78, *Specification for Copper and Copper Alloy Gas Welding Rods.*

d. ASTM-SAE Unified Numbering System for Metals and Alloys.

e. Sulfur shall be 0.01 percent maximum for the ERCuNi classification.

7. Weld Test Assembly

No weld assembly is required.

8. Chemical Analysis

8.1 When testing bare electrodes and welding rods, an adequate sample of as-manufactured filler metal, sufficient for retest if necessary, shall be acquired to perform the prescribed chemical analysis. Chemical composition shall conform to the requirements of Table 1.

8.2 Chemical analysis may be made by any suitable method agreed upon between the supplier and purchaser. In case of dispute, the following standard procedures shall be used, as appropriate:

(a) ASTM E62, *Photometric Methods of Chemical Analysis of Copper and Copper-Base Alloys.*

(b) ASTM E75, *Chemical Analysis of Copper-Nickel-Zinc Alloys.*

PART C — MANUFACTURE, IDENTIFICATION, AND PACKAGING

9. Method of Manufacture

The welding materials classified by this specification may be made by any method that will produce material conforming to the requirements of this specification.

10. Standard Sizes and Shapes

10.1 Filler metal shall be available in the following forms:

10.1.1 Straight lengths.

10.1.2 Coils with or without support.

10.1.3 Wound on spools.

10.2 Standard sizes shall conform to Table 2.

10.3 Standard lengths shall be 36 in. (900 mm) + 0–½ in. (+ 0–12.7 mm).

11. Finish and Uniformity

11.1 All filler metal shall have a smooth finish, free from slivers, depressions, scratches, scale, or other foreign matter that would adversely effect welding characteristics, operation of the welding equipment, or properties of the weld metal.

11.2 Cast and Helix of Filler Metal Wound on Spools

11.2.1 Cast

11.2.1.1 The cast of a spooled filler metal wound on a 12 in. (300 mm) spool shall be such that a specimen of sufficient length [4 to 8 ft (1.2 to 2.4 m)] to form one loop when cut from the spool and laid on a flat surface shall form an unrestrained circle not less than 15 in. (320 mm) nor greater than 40 in. (1,020 mm) in diameter.

11.2.1.2 The cast of a spooled filler metal wound on an 8 in. (200 mm) spool shall be such that a specimen of sufficient length [3 to 6 ft (0.9 to 1.7 m)] to form one loop when cut from the spool and laid on a flat surface shall form an unrestrained circle not less than 11 in. (280 mm) nor greater than 35 in. (885 mm) in diameter.

11.2.1.3 The cast of a spooled filler metal wound on a 4 in. (100 mm) spool shall be such that a specimen of sufficient length [12 to 30 in. (300 to 760 mm)] to form one loop when cut from the spool and laid on a flat surface shall form an unrestrained circle not less that 2.5 in. (54 mm) nor greater than 15 in. (380 mm) in diameter.

11.2.2 Helix

11.2.2.1 The helix of a spooled filler metal wound on a 12 in. (300 mm) spool shall be such that when the specimen from 11.2.1.1 is laid on a flat surface, the vertical separation between the filler metal and the flat surface shall not exceed 1 in. (25 mm).

11.2.2.2 The helix of the spooled filler metal wound on an 8 in. (200 mm) spool shall be such that when the specimen from 11.2.1.1 is laid on a flat surface, the vertical separation between the filler metal and the flat surface shall not exceed ¾ in. (19 mm).

11.2.2.3 The helix of a spooled filler metal wound on a 4 in. (100 mm) spool shall be such that when the specimen from 11.2.1.3 is laid on a flat surface, the vertical separation between the filler metal and the flat surface shall not exceed ½ in. (13 mm).

11.3 Cast and Helix of Filler Metal in Coils With or Without Support. Cast and helix shall be suitable for feeding in an uninterrupted manner in automatic and semiautomatic equipment.

12. Standard Package Forms

12.1 Filler Metal in Coils Without Support. Dimensions shall be specified by the purchaser.

TABLE 2
STANDARD SIZES

Form	Diameter[a,b] in.		Diameter[a,b] mm
Straight lengths	1/16	(0.062)	1.6
	5/64	(0.078)	2.0
	3/32	(0.092)	2.4
Coils, with or without support	1/8	(0.125)	3.2
	5/32	(0.156)	4.0
	3/16	(0.187)	4.8
	1/4	(0.250)	6.4
Wound on spools	0.020		0.5
	0.030		0.8
	0.035		0.9
	0.045		1.2
	0.062	(1/16)	1.6
	0.078	(5/64)	2.0
	0.094	(3/32)	2.4

NOTES:
a. Filler metal shall not vary more than ±0.002 in. (0.05 mm) in diameter.
b. Other sizes, lengths, and forms may be supplied as agreed upon between the purchaser and supplier.

TABLE 3
STANDARD WEIGHT AND DIMENSIONS FOR COILS WITH SUPPORT

Inside Diameter of Liner		Nominal Weight of Coil		Max Width of Wound Electrode	
in.	mm	lb	kg	in.	mm
12 ± 1/8	300 ± 3	25	11	2-1/2 or 4-5/8	65 or 120
		50	23	4-5/8	120
		60	27	4-5/8	120

12.2 Filler Metal in Coils With Support

12.2.1 Standard dimension of coils with support shall be as specified in Table 3.

12.3 Filler Metal Wound on Spools. Standard spool sizes shall be 4 in. (100 mm), 8 in. (200 mm), and 12 in. (300 mm) with dimensions as shown in Figs. 1 and 2.

12.4 Filler Metal in Straight Lengths. Standard size packages shall be in accordance with 15.4.

12.5 Other package forms shall be agreed upon by the purchaser and supplier.

13. Winding Requirements

13.1 Each coil with or without support, or spool, shall contain one continuous length of filler metal made from a single heat or lot of material. When present, butt joints shall be properly made so as not to interface with the uniform, uninterrupted feeding of the filler metal on automatic and semiautomatic equipment.

13.2 Spooled filler metal shall be closely wound in layers, but adjacent turns within a layer need not necessarily touch. The winding shall be such that kinks, waves, sharp bends, overlapping, or wedging are not encountered, leaving the filler metal free to unwind

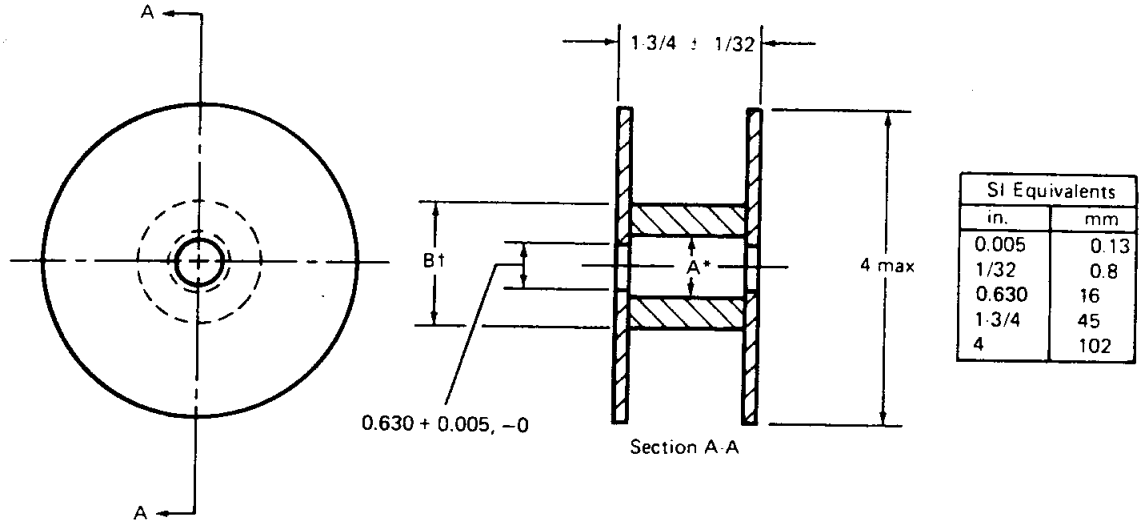

All dimensions in inches

*Dimension A, inside diameter of barrel, shall be such that swelling of the barrel or misalignment of the barrel and flanges will not result in the core of the spool being less than the inside diameter of the flanges.

†Dimension B, outside diameter of barrel, shall be such as to permit proper feeding of the electrode.

FIG. 1 DIMENSIONS OF 4 IN. (100 MM) SPOOL

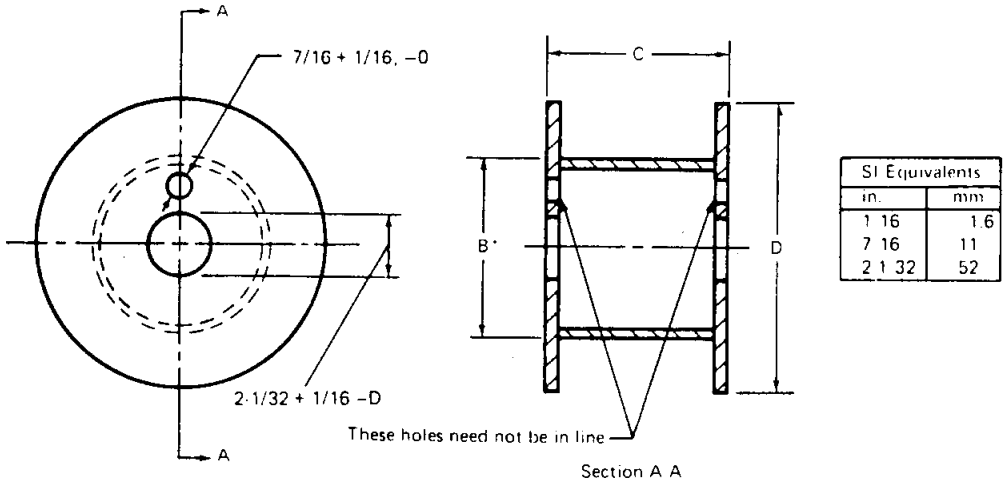

All dimensions in inches

*Dimension B, outside diameter of barrel, shall be such as to permit proper feeding of the electrode.

Spool size		Dimensions			
		C		D, maximum	
in.	mm	in.	mm	in.	mm
8	200	2−5/32 ± 1/32	55 ± 1	8	200
12	300	4 ± 1/16	100 ± 2	12	300

FIG. 2 DIMENSIONS OF 8 AND 12 IN. (200 AND 300 MM) SPOOLS

without restriction. The outside end of the spooled filler metal shall be identified so that it can be readily located and shall be fastened to the spool to avoid unwinding.

14. Filler Metal Identification

14.1 Product information listed in 14.2.1 thru 14.2.5 and the precautionary information of Section 16 shall appear on each tag or label.

14.2 Coils Without Support. Within the outer wrapping, coils without support shall be identified by a tag or otherwise at the inside end showing the following information:

14.2.1 AWS specification and classification numbers (year of issue may be excluded).

14.2.2 Supplier name and trade designation.

14.2.3 Standard size and net weight.

14.2.4 Lot, control, or heat number.

14.2.5 Information shall be attached in such a manner that it is not readily removable.

14.3 Coils With Support. Filler metal wound on coils with support shall be identified by the information required in 14.2.1 thru 14.2.5.

14.4 Filler Metal in Straight Lengths

14.4.1 Identification marking of individual lengths is not required.

14.4.2 Class marking of individual lengths may be as agreed upon between supplier and purchaser.

14.5 Spools. Filler metal wound on spools shall be identified by the information required in 14.2.1 thru 14.2.5 placed on one flange of the spool in such a manner that the identification is not readily removable.

15. Packaging

15.1 Filler Metal in Coils Without Support

15.1.1 Nominal weight shall be as specified by the purchaser.

15.1.2 Net weights shall be within 10 percent of the nominal weight.

15.1.3 Coils shall be wrapped and tied securely.

15.2 Filler Metal in Coils With Support

15.2.1 Nominal coil weight shall be in accordance with Table 3.

15.2.2 Net weight shall be within 10 percent of the nominal weight.

15.2.3 Liners shall be of such material and design to provide protection against damage or distortion of the filler metal during normal handling and storage.

15.2.4 Liners shall be sufficiently clean and dry to maintain cleanliness of the filler metal.

15.3 Filler Metal Wound on Spools

15.3.1 Nominal weights shall be:

15.3.1.1 For 12 in. (300 mm) spools — 25 lb (11 kg).

15.3.1.2 For 8 in. (200 mm) spools — 10 lb (4.5 kg).

15.3.1.3 For 4 in. (100 mm) spools — 2 lb (0.9 kg).

15.3.2 Except for 12 in. (300 mm) spools, net weight may vary ± 20 percent from the nominal.

15.3.3 For 12 in. (300 mm) the net weight may vary ±20 percent from the nominal. In addition, 20 percent of any lot may weigh 12.5 to 20 lb (5.7 to 9.1 kg).

15.3.4 Spools shall be of a material and design so as to provide protection against damage or distortion of themselves or the filler metal due to normal handling and use.

15.3.5 Spools shall be sufficiently clean and dry to maintain cleanliness of the filler metal.

15.3.6 Spools shall be constructed to electrically insulate the filler metal from the spool.

15.4 Filler metal in straight lengths. Nominal weights shall be 5, 10, 25, 50, and 60 lbs (2.3, 4.5, 11.2, 27, and 31 kg).

16. Package Marking

16.1 The following product information (as a minimum) shall be legibly marked so as to be visible from the outside of each unit package:

16.1.1 AWS specification and classification numbers. (Excluding the year of issue)

16.1.2 Supplier's name and trade designation.

16.1.3 Standard size and net weight.

16.1.4 Lot, control, or heat number.

16.2 All packages of welding materials including individual unit packages enclosed within a larger package, shall carry (as a minimum) the following precautionary information prominently displayed in legible type:

WARNING: Protect yourself and others. Read and understand this information. **FUMES AND GASES** can be dangerous to your health. **ARC RAYS** can injure eyes and burn skin. **ELECTRIC SHOCK** can kill.

- Read and understand the manufacturer's instructions and your employer's safety practices.
- Keep your head out of the fumes.
- Use enough ventilation, exhaust at the arc, or both to keep fumes and gases away from your breathing zone, and the general area.
- Wear correct eye, ear and body protection.
- Do not touch live electrical parts.
- See American National Standard Z49.I *Safety in Welding and Cutting* published by the American Welding Society, 550 N.W. LeJeune Rd., P.O. Box 351040, Miami, Florida 33135: OSHA Safety and Health Standards, 29 CFR 1910, available from U.S. Dept. of Labor, Washington, DC 20210.

Appendix
Guide to AWS Classification of Copper and Copper Alloy Bare Welding Rods and Electrodes

(This Appendix is not a part of AWS A5.7-84, *Specification for Copper and Copper Alloy Bare Welding Rods and Electrodes*, but is included for information only.)

A1 Introduction

A1.1 The specification itself is intended to provide both the manufacturer and the purchaser of copper and copper alloy filler metal with a means of production control and a basis of acceptance through mutually acceptable, sound, standard requirements.

A1.2 This guide has been prepared as an aid to prospective users of the copper and copper alloy filler metal covered by this specification in determining which classification of filler metal is best suited for a particular application, with due consideration to the particular requirements for that application.

A2 Method of Classification

A2.1 The specification classifies those copper and copper alloy filler metals used most extensively at the time of issuance of the specification. In A4, the filler metals are arranged in five basic groups. The tensile properties, bend ductility, and soundness of welds produced with the filler metals classified within this specification frequently are determined during procedure qualification. It should be noted that the variables in the procedure (current, voltage, and welding speed), variables in shielding medium (the specific gas mixture or the flux), variables in the composition of the base metal and the filler metal influence the results which may be obtained. When these variables are properly controlled, however, the filler metal shall give sound welds whose strengths (determined by all-weld-metal tension tests) will meet or exceed the minimums shown in Table A1. Typical hardness properties are also included in Table A1. When supplementary tests for mechanical properties are specified, the procedures should be in accordance with AWS B4.0, *Standard Methods for Mechanical Testing of Welds.*

A2.2 The system for identifying the filler metal classification in this specification follows the standard pattern used in other AWS filler metal specifications. The letters ER at the beginning of a classification indicate that the bare filler metal may be used either as an electrode or as a welding rod.

A2.3 The chemical symbol Cu is used to identify the filler metals as copper-base alloys. The additional chemical symbols, as the Si in ERCuSi, the Sn in ERCuSn, etc., indicate the principal alloying element of each group. Where more than one classification is included in a basic group, the individual classifications in the group are identified by the letters A, B, C, etc., as in ERCuSn-A. Further subdividing is done by using 1, 2, etc., after the last letter, as the 2 in ERCuAl-A2.

A3 Ventilation During Welding

A3.1 Five major factors govern the quantity of fumes to which welders and welding operators can be exposed during welding. These are:

A3.1.1 Dimensions of the space in which welding is done (with special regard to the height of the ceiling).

A3.1.2 Number of welders and welding operators working in that space.

A3.1.3 Rate of evolution of fumes, gases, or dust, according to the materials and processes involved.

A3.1.4 The proximity of the welders or welding operators to the fumes as they issue from the welding

TABLE A1
HARDNESS AND TENSILE STRENGTH OF COPPER AND COPPER ALLOY WELD METAL

AWS Classification	Brinell Hardness		Minimum Tensile Strength	
			psi	MPa
ERCu	25 Rockwell F		25 000	172
ERCuSi-A	80 to 100	(500 kg load)	50 000	345
ERCuSn-A	70 to 85	(500 kg load)	35 000	240
ERCuNi	60 to 80	(500 kg load)	50 000	345
ERCuAl-A1	80 to 110	(500 kg load)	55 000	380
ERCuAl-A2	130 to 150	(3000 kg load)[a]	60 000	414
ERCuAl-A3	140 to 180	(3000 kg load)[a]	65 000	450
ERCuNiAl	160 to 200	(3000 kg load)[a]	72 000	480
ERCuMnNiAl	160 to 200	(3000 kg load)[a]	75 000	515

NOTE: Hardness values as listed above are average values for an as-welded deposit made with the filler metal specified. This table is included for information only.
a. Gas tungsten arc process only.

zone, and to the gases and dusts in the space in which the welders or welding operators are working.

A3.1.5 The ventilation provided to the space in which the welding is done.

A3.2 American National Standard Z49.1, *Safety in Welding and Cutting* (published by the American Welding Society), discusses the ventilation that is required during welding and should be referred to for details. Attention is particularly drawn to the section of that document entitled *Ventilation.*

A4 Description and Intended Use of the Welding Rods and Electrodes

A4.1 General Characteristics

A4.1.1 Gas tungsten arc welding normally employs dcen current.

A4.1.2 Gas metal arc welding normally employs dcep current.

A4.1.3 Shielding gas for use with either process normally is argon, helium, or a mixture of the two. Oxygen-bearing gases normally are not recommended.

A4.1.4 Base metal should be free from moisture and all other contaminants, including surface oxides.

A4.2 ERCu (Copper Filler Metal). ERCu filler metals are made of deoxidized copper, but also may contain one or more of the following elements: phosphorus, silicon, tin, manganese, and silver. Phosphorus and silicon are added primarily as deoxidizers. The other elements add either to the ease of welding or to the properties of the final weldment. ERCu filler metals generally are used for the welding of deoxidized and electrolytic tough pitch copper. Reactions with hydrogen in oxygen-free copper, and the segregation of copper oxide in tough pitch copper may detract from joint efficiency. ERCu welding electrodes and rods may be used to weld these base metals when the highest quality is not required.

A4.2.1 Preheating is desirable on most work; on thick base metal it is essential. Preheat temperatures of 400 to 1000°F (205 to 540°C) are suitable.

A4.2.2 For thick base metals, gas metal arc welding is preferred. Conventional joint designs consistent with good welding practice are generally satisfactory. An external source of preheating generally is not needed when welding base metal ¼ in. (6.4 mm) and thinner in thickness. Preheating in the range of 400 to 1000° F (205 to 540°C) is desirable when welding base metal thicker than ¼ in. (6.4 mm) if high-quality welds are to be obtained.

A4.3 ERCuSi (Silicon Bronze) Filler Metal

A4.3.1 ERCuSi filler metals are copper-base alloys containing approximately 3 percent silicon; they may also contain small percentages of manganese, tin, or zinc. They are used for gas tungsten and gas metal arc welding of copper-silicon and copper-zinc base metals, to themselves and also to steel.

A4.3.2 When gas metal arc welding with ERCuSi filler metals, it generally is best to keep the weld pool

small and the interpass temperature below 150° F (65° C) to minimize hot cracking. The use of narrow weld passes reduces contraction stresses and also permits faster cooling through the hot-short temperature range.

A4.3.3 When gas tungsten arc welding with ER-CuSi filler metals, best results are obtained by keeping the weld pool small. Preheating is not required. Welding can be done in all positions, but the flat position is preferred.

A4.4 ERCuSn-A (Phosphor Bronze) Filler Metal

A4.4.1 ERCuSn-A filler metals contain about 5 percent tin and up to 0.35 percent phosphorus added as a deoxidizer. Tin increases wear resistance of the weld metal and slows the rate of solidification by broadening the temperature differential between the liquidus and solidus. This slower solidification increases the tendency to hot shortness. To minimize this effect, the weld pool should be kept small and welding time as short as possible. ERCuSn-A filler metals can be used to weld bronze and brass. They also can be used to weld copper if the presence of tin in the weld metal is not objectionable.

A4.4.2 When gas tungsten arc welding with ER-CuSn filler metals, preheating is desirable. Welding is done in the flat position only.

A4.5 ERCuNi (Copper-Nickel) Filler Metal

A4.5.1 In ERCuNi filler metals, the nickel addition strengthens the weld metal and improves the corrosion resistance, particularly against salt water. The weld metal has good hot and cold ductility. Copper-nickel filler metals are used for welding most copper-nickel alloys.

A4.5.2 When gas tungsten or gas metal arc welding with ERCuNi filler metals, preheating is not required. Welding is done in all positions. The arc should be kept as short as possible to assure adequate shielding gas coverage and thus minimize porosity.

A4.6 ERCuAl (Aluminum Bronze) Filler Metal

A4.6.1 ERCuAl-Al filler metal is an iron-free aluminum bronze. It is recommended for use as a surfacing metal for wear-resistant surfaces having relatively light loads, for resistance to corrosive media such as salt or brackish water, and for resistance to many commonly used acids in varying concentrations and temperatures. This alloy is not recommended for joining.

A4.6.2 ERCuAl-A2 filler metal is an iron-bearing aluminum bronze and is generally used for joining aluminum bronzes of similar composition: manganese, silicon bronzes, some copper-nickel alloys, ferrous metals and dissimilar metals. The most common dissimilar metal combinations are aluminum bronze to steel and copper to steel. This alloy also is used to provide wear- and corrosion-resistant surfaces.

A4.6.3 ERCuAl-A3 is a higher strength aluminum bronze filler metal used for joining and repair welding of aluminum bronze castings of similar composition, and for depositing bearing surfaces and wear- and corrosion-resistant surfaces.

A4.6.4 ERCuNiAl is a nickel-aluminum bronze filler metal used for joining and repairing of cast or wrought nickel-aluminum bronze base metals.

A4.6.5 ERCuMnNiAl is a manganese-nickel-aluminum bronze filler metal used for joining or repairing of cast or wrought base metals of similar composition. This filler metal may also be used for surfacing applications where high resistance to corrosion, erosion, or cavitation is required.

A4.6.6 Because of the formation of aluminum oxide in the molten weld pool, aluminum bronze filler metals are not recommended for use with the oxyfuel gas welding process.

A4.6.7 Copper-aluminum weld metals are characterized by relatively high tensile strength, yield strength, and hardness. Depending upon the thickness or composition of the base metal, preheat may or may not be necessary.

A4.6.8 Welding in the flat position is preferred. Welding in other positions can be done successfully with pulsed arc welding equipment and welder technique.

SPECIFICATION FOR FILLER METALS FOR BRAZING AND BRAZE WELDING

SFA-5.8

(Identical with AWS Specification A5.8-92)

1. Scope

This specification prescribes requirements for the classification of filler metals for brazing and braze welding. It includes filler metals for brazing with or without a flux, and in all protective atmospheres, for various applications, including those for vacuum service.[1] Filler metals identified by the prefix "RB" indicate that the filler metal is suitable for use both as brazing rod for braze welding and as a brazing filler metal.

PART A — GENERAL REQUIREMENTS

2. Classification

2.1 The brazing filler metals covered by this specification are classified according to their chemical composition, as specified in Tables 1 through 6.[2]

2.2 Filler metal classified under one classification shall not be classified under any other classification of this specification.

3. Acceptance

Acceptance of the brazing filler metal shall be in accordance with the provisions of the latest edition of ANSI/AWS A5.01, *Filler Metal Procurement Guidelines*.[3]

[1] Filler metals for vacuum service are for devices operating in a vacuum, regardless of the atmosphere used in making the joint.

[2] An explanation of the method of classification of the filler metals is included in A2.

[3] See A3, Acceptance (in the Appendix) for further information concerning acceptance, testing of the material shipped, and ANSI/AWS A5.01, *Filler Metal Procurement Guidelines*.

AWS documents may be obtained from the American Welding Society, 550 N.W. LeJeune Road, P.O. Box 351040, Miami, Florida 33135.

4. Certification

By affixing the AWS specification and classification designations to the package, or the classification to the product, the manufacturer certifies that the product meets the requirements of this specification.[4]

5. Units of Measure and Rounding-Off Procedure

5.1 U.S. Customary Units are the standard units of measure in this specification. The SI Units are given as equivalent values to the U.S. Customary Units. The standard sizes and dimensions in the two systems are not identical, and for this reason conversion from a standard size or dimension in one system will not always coincide with a standard size or dimension in the other. Suitable conversions encompassing standard sizes of both can be made, however, if appropriate tolerances are applied in each case.

5.2 For the purpose of determining conformance with this specification, an observed or calculated value shall be rounded to the "nearest unit" in the last right-hand place of figures used in expressing the limiting value in accordance with the rounding-off method given in ASTM E29, *Practice for Using Significant Digits in Test Data to Determine Conformance with Specifications*.[5]

[4] See A4, Certification (in the Appendix) for further information concerning certification and the testing called for to meet this requirement.

[5] ASTM standards can be obtained from the American Society for Testing and Materials, 100 Barr Harbor Drive, West Conshohocken, PA 19428-2959.

TABLE 1
CHEMICAL COMPOSITION REQUIREMENTS FOR SILVER FILLER METALS

AWS Classification	UNS Number[a]	Composition, Weight Percent								
		Ag	Cu	Zn	Cd	Ni	Sn	Li	Mn	Other Elements, Total[b]
BAg-1	P07450	44.0–46.0	14.0–16.0	14.0–18.0	23.0–25.0	—	—	—	—	0.15
BAg-1a	P07500	49.0–51.0	14.5–16.5	14.5–18.5	17.0–19.0	—	—	—	—	0.15
BAg-2	P07350	34.0–36.0	25.0–27.0	19.0–23.0	17.0–19.0	—	—	—	—	0.15
BAg-2a	P07300	29.0–31.0	26.0–28.0	21.0–25.0	19.0–21.0	—	—	—	—	0.15
BAg-3	P07501	49.0–51.0	14.5–16.5	13.5–17.5	15.0–17.0	2.5–3.5	—	—	—	0.15
BAg-4	P07400	39.0–41.0	29.0–31.0	26.0–30.0	—	1.5–2.5	—	—	—	0.15
BAg-5	P07453	44.0–46.0	29.0–31.0	23.0–27.0	—	—	—	—	—	0.15
BAg-6	P07503	49.0–51.0	33.0–35.0	14.0–18.0	—	—	—	—	—	0.15
BAg-7	P07563	55.0–57.0	21.0–23.0	15.0–19.0	—	—	4.5–5.5	—	—	0.15
BAg-8	P07720	71.0–73.0	Remainder	—	—	—	—	—	—	0.15
BAg-8a	P07723	71.0–73.0	Remainder	—	—	—	—	0.25–0.50	—	0.15
BAg-9	P07650	64.0–66.0	19.0–21.0	13.0–17.0	—	—	—	—	—	0.15
BAg-10	P07700	69.0–71.0	19.0–21.0	8.0–12.0	—	—	—	—	—	0.15
BAg-13	P07540	53.0–55.0	Remainder	4.0–6.0	—	0.5–1.5	—	—	—	0.15
BAg-13a	P07560	55.0–57.0	Remainder	—	—	1.5–2.5	—	—	—	0.15
BAg-18	P07600	59.0–61.0	Remainder	—	—	—	9.5–10.5	—	—	0.15
BAg-19	P07925	92.0–93.0	Remainder	—	—	—	—	0.15–0.30	—	0.15
BAg-20	P07301	29.0–31.0	37.0–39.0	30.0–34.0	—	—	—	—	—	0.15
BAg-21	P07630	62.0–64.0	27.5–29.5	—	—	2.0–3.0	5.0–7.0	—	—	0.15
BAg-22	P07490	48.0–50.0	15.0–17.0	21.0–25.0	—	4.0–5.0	—	—	7.0–8.0	0.15
BAg-23	P07850	84.0–86.0	—	—	—	—	—	—	Remainder	0.15
BAg-24	P07505	49.0–51.0	19.0–21.0	26.0–30.0	—	1.5–2.5	—	—	—	0.15
BAg-26	P07250	24.0–26.0	37.0–39.0	31.0–35.0	—	1.5–2.5	—	—	1.5–2.5	0.15
BAg-27	P07251	24.0–26.0	34.0–36.0	24.5–28.5	12.5–14.5	—	—	—	—	0.15
BAg-28	P07401	39.0–41.0	29.0–31.0	26.0–30.0	—	—	1.5–2.5	—	—	0.15
BAg-33	P07252	24.0–26.0	29.0–31.0	26.5–28.5	16.5–18.5	—	—	—	—	0.15
BAg-34	P07380	37.0–39.0	31.0–33.0	26.0–30.0	—	—	1.5–2.5	—	—	0.15
BAg-35	P07351	34.0–36.0	31.0–33.0	31.0–35.0	—	—	—	—	—	0.15
BAg-36	P07454	44.0–46.0	26.0–28.0	23.0–27.0	—	—	2.5–3.5	—	—	0.15
BAg-37	P07253	24.0–26.0	39.0–41.0	31.0–35.0	—	—	1.5–2.5	—	—	0.15

NOTES:
a. SAE/ASTM Unified Numbering System for Metals and Alloys.
b. The brazing filler metal shall be analyzed for those specific elements for which values are shown in this table. If the presence of other elements is indicated in the course of this work, the amount of those elements shall be determined to ensure that their total does not exceed the limit specified.
See Table A2 for discontinued brazing filler metal classification.
See Table 6 for the following Ag classifications not included here: BVAg-0, BVAg-6b, BVAg-8b, BVAg-29 to BVAg-32.

TABLE 2
CHEMICAL COMPOSITION REQUIREMENTS FOR GOLD FILLER METALS

AWS Classification	UNS Number[a]	Composition, Weight Percent				
		Au	Cu	Pd	Ni	Other Elements, Total[b]
BAu-1	P00375	37.0–38.0	Remainder	—	—	0.15
BAu-2	P00800	79.5–80.5	Remainder	—	—	0.15
BAu-3	P00350	34.5–35.5	Remainder	—	2.5–3.5	0.15
BAu-4	P00820	81.5–82.5	—	—	Remainder	0.15
BAu-5	P00300	29.5–30.5	—	33.5–34.5	35.5–36.5	0.15
BAu-6	P00700	69.5–70.5	—	7.5–8.5	21.5–22.5	0.15

NOTES:
a. SAE/ASTM Unified Numbering System for Metals and Alloys.
b. The brazing filler metal shall be analyzed for those specific elements for which values are shown in this table. If the presence of other elements is indicated in the course of this work, the amount of those elements shall be determined to ensure that their total does not exceed the limit specified.

PART B — TESTS, PROCEDURES, AND REQUIREMENTS

6. Summary of Tests

6.1 Chemical analysis is required for all classifications.

6.2 Filler metals for vacuum service require a melt cleanliness test and a spatter test, in addition to chemical analysis.

6.3 Sieve analysis is required for all powdered brazing filler metal.

6.4 A binder content test for transfer tape used in conjunction with powdered brazing filler metals is required.

7. Retest

If the results of any test fail to meet the requirement, that test shall be repeated twice. The results of both tests shall meet the requirement. Samples for retest may be taken from the original sample or from one or two new samples. For chemical analysis, retest need be only for the specific elements that failed to meet the requirement.

8. Chemical Analysis

8.1 Brazing filler metals and the filler metal portion of the clad product shall conform to the chemical composition requirements of Tables 1 through 6 for the specific filler metal being tested.

8.2 The sample shall be analyzed by accepted analytical methods.

8.3 In case of dispute, the referee method for all elements except phosphorous shall be the appropriate analytical method in the latest edition of the *Annual Book of ASTM Standards, Chemical Analysis of Metals; Sampling and Analysis of Metal Bearing Ores.* For phosphorus, the referee method shall be that of the latest edition of ASTM E1, *Standard Photometric Method for Determination of Phosphorus in High-Phosphorus Brazing Filler Metals.*

9. Sieve Analysis

9.1 Sieve analysis for powdered brazing filler metals shall be made in accordance with ASTM B214, *Standard Method for Sieve Analysis of Granular Metal Powders.*

9.2 The results of sieve analysis shall conform to the particle size distribution of the requirements of Table 7.

10. Melt Cleanliness Test

10.1 The melt cleanliness test shall be performed on a sample of approximately one gram of filler metal. Clean, dry tools shall be used to extract the sample from the stock, and the sample shall be placed in a clean, dense polycrystalline alumina crucible or boat of at least 99.6% alumina. As an alternative, a fused silica crucible or boat that has been precleaned by air

TABLE 3
CHEMICAL COMPOSITION REQUIREMENTS FOR ALUMINUM AND MAGNESIUM FILLER METALS

AWS Classification	UNS Number[b]	Chemical Composition, Weight Percent[a]												Other Elements[c]	
		Si	Cu	Mg	Bi	Fe	Zn	Mn	Cr	Ni	Ti	Be	Al	Each	Total
BAlSi-2	A94343	6.8–8.2	0.25	—	—	0.8	0.20	0.10	—	—	—	—	Remainder	0.05	0.15
BAlSi-3	A94145	9.3–10.7	3.3–4.7	0.15	—	0.8	0.20	0.15	0.15	—	—	—	Remainder	0.05	0.15
BAlSi-4	A94047	11.0–13.0	0.30	0.10	—	0.8	0.20	0.15	—	—	—	—	Remainder	0.05	0.15
BAlSi-5	A94045	9.0–11.0	0.30	0.05	—	0.8	0.10	0.05	—	—	0.20	—	Remainder	0.05	0.15
BAlSi-7	A94004	9.0–10.5	0.25	1.0–2.0	—	0.8	0.20	0.10	—	—	—	—	Remainder	0.05	0.15
BAlSi-9	A94147	11.0–13.0	0.25	0.10–0.5	—	0.8	0.20	0.10	—	—	—	—	Remainder	0.05	0.15
BAlSi-11	A94104	9.0–10.5	0.25	1.0–2.0	0.02–0.20	0.8	0.20	0.10	—	—	—	—	Remainder	0.05	0.15
BMg-1	M19001	0.05	0.05	Remainder	—	0.005	1.7–2.3	0.15–1.5	—	0.005	—	0.0002–0.0008	8.3–9.7	—	0.30

NOTES:
a. Single values are maximum, unless otherwise noted.
b. SAE/ASTM Unified Numbering System for Metals and Alloys.
c. The filler metal shall be analyzed for those specific elements for which values are shown in this table. If the presence of other elements is indicated in the course of this work, the amount of those elements shall be determined to ensure that they, or their total do not exceed the limits specified.

TABLE 4
CHEMICAL COMPOSITION REQUIREMENTS FOR COPPER, COPPER-ZINC, AND COPPER-PHOSPHORUS FILLER METALS

AWS Classification	UNS Number[b]	Chemical Composition, Weight Percent[a]											
		Cu	Ag	Zn	Sn	Fe	Mn	Ni	P	Pb	Al	Si	Other Elements, Total[c]
BCu-1[f]	C14180	99.90 min	—	—	—	—	—	—	0.075	0.02	0.01*	—	0.10[f]
BCu-1a	—	99.00 min[d]	—	—	—	—	—	—	—	—	—	—	0.30[d]
BCu-2[e]	—	86.50 min	—	—	—	—	—	—	—	—	—	—	0.50
RBCuZn-A[f]	C47000	57.0–61.0	—	Remainder	0.25–1.00	*	*	—	—	0.05*	0.01*	*	0.50[f]
RBCuZn-B[f]	C68000	56.0:NND:60.0[g]	—	Remainder	0.80–1.10	0.25–1.20	0.01–0.50	0.20–0.80[h]	—	0.05*	0.01*	0.04–0.15	0.50[f]
RBCuZn-C[f]	C68100	56.0–60.0	—	Remainder	0.80–1.10	0.25–1.20	0.01–0.50	—	—	0.05*	0.01*	0.04–0.15	0.50[f]
RBCuZn-D[f]	C77300	46.0–50.0	—	Remainder	—	—	—	9.0–11.0	0.25	0.05*	0.01*	0.04–0.25	0.50[f]
BCuP-1	C55180	Remainder	—	—	—	—	—	—	4.8–5.2	—	—	—	0.15
BCuP-2	C55181	Remainder	—	—	—	—	—	—	7.0–7.5	—	—	—	0.15
BCuP-3	C55281	Remainder	4.8–5.2	—	—	—	—	—	5.8–6.2	—	—	—	0.15
BCuP-4	C55283	Remainder	5.8–6.2	—	—	—	—	—	7.0–7.5	—	—	—	0.15
BCuP-5	C55284	Remainder	14.5–15.5	—	—	—	—	—	4.8–5.2	—	—	—	0.15
BCuP-6	C55280	Remainder	1.8–2.2	—	—	—	—	—	6.8–7.2	—	—	—	0.15
BCuP-7	C55282	Remainder	4.8–5.2	—	—	—	—	—	6.5–7.0	—	—	—	0.15

NOTES:
a. Single values are maximum, unless noted.
b. SAE/ASTM Unified Numbering System for Metals and Alloys.
c. The filler metal shall be analyzed for those specific elements for which values or asterisks are shown in this table. If the presence of other elements is indicated in the course of this work, the amount of those elements shall be determined to ensure that their total does not exceed the limit specified.
d. The balance is oxygen, present as cuprous oxide. Oxygen is not to be included in "Other Elements."
e. These chemical composition requirements pertain only to the cuprous oxide powder and do not include requirements for the organic vehicle in which the cuprous oxide is suspended, when supplied in paste form.
f. The total of all other elements including those for which a maximum value or asterisk is shown, shall not exceed the value specified in "Other Elements, Total."
g. Silver residual is included in Cu analysis.
h. Includes cobalt.

TABLE 5
CHEMICAL COMPOSITION REQUIREMENTS FOR NICKEL AND COBALT FILLER METALS

AWS Classification	UNS Number[b]	Chemical Composition, Weight Percent[a]																
		Ni	Cr	B	Si	Fe	C	P	S	Al	Ti	Mn	Cu	Zr	W	Co	Se	Other Elements, Total[c]
BNi-1	N99600	Remainder	13.0–15.0	2.75–3.50	4.0–5.0	4.0–5.0	0.60–0.90	0.02	0.02	0.05	0.05	—	—	0.05	—	0.10	0.005	0.50
BNi-1a	N99610	Remainder	13.0–15.0	2.75–3.50	4.0–5.0	4.0–5.0	0.06	0.02	0.02	0.05	0.05	—	—	0.05	—	0.10	0.005	0.50
BNi-2	N99620	Remainder	6.0–8.0	2.75–3.50	4.0–5.0	2.5–3.5	0.06	0.02	0.02	0.05	0.05	—	—	0.05	—	0.10	0.005	0.50
BNi-3	N99630	Remainder	—	2.75–3.50	4.0–5.0	0.5	0.06	0.02	0.02	0.05	0.05	—	—	0.05	—	0.10	0.005	0.50
BNi-4	N99640	Remainder	—	1.50–2.20	3.0–4.0	1.5	0.06	0.02	0.02	0.05	0.05	—	—	0.05	—	0.10	0.005	0.50
BNi-5	N99650	Remainder	18.5–19.5	0.03	9.75–10.50	—	0.06	0.02	0.02	0.05	0.05	—	—	0.05	—	0.10	0.005	0.50
BNi-5a	N99651	Remainder	18.5–19.5	1.0–1.5	7.0–7.5	0.5	0.10	0.02	0.02	0.05	0.05	—	—	0.05	—	0.10	0.005	0.50
BNi-6	N99700	Remainder	—	—	—	—	0.06	10.0–12.0	0.02	0.05	0.05	—	—	0.05	—	0.10	0.005	0.50
BNi-7	N99710	Remainder	13.0–15.0	0.01	0.10	0.2	0.06	9.7–10.5	0.02	0.05	0.05	0.04	—	0.05	—	0.10	0.005	0.50
BNi-8	N99800	Remainder	—	—	6.0–8.0	—	0.06	0.02	0.02	0.05	0.05	21.5–24.5	4.0–5.0	0.05	—	0.10	0.005	0.50
BNi-9	N99612	Remainder	13.5–16.5	3.25–4.00	—	1.5	0.06	0.02	0.02	0.05	0.05	—	—	0.05	—	0.10	0.005	0.50
BNi-10	N99622	Remainder	10.0–13.0	2.0–3.0	3.0–4.0	2.5–4.5	0.40–0.55	0.02	0.02	0.05	0.05	—	—	0.05	15.0–17.0	0.10	0.005	0.50
BNi-11	N99624	Remainder	9.00–11.75	2.2–3.1	3.35–4.25	2.5–4.0	0.30–0.50	0.02	0.02	0.05	0.05	—	—	0.05	11.50–12.75	0.10	0.005	0.50
BCo-1	R39001	16.0–18.0	18.0–20.0	0.70–0.90	7.5–8.5	1.0	0.35–0.45	0.02	0.02	0.05	0.05	—	—	0.05	3.5–4.5	Remainder	0.005	0.50

NOTES:
a. Single values are maximum.
b. SAE/ASTM Unified Numbering System for Metals and Alloys.
c. The filler metal shall be analyzed for those specific elements for which values are shown in this table. If the presence of other elements is indicated in the course of this work, the amount of those elements shall be determined to ensure that their total does not exceed the limit specified.

TABLE 6
CHEMICAL COMPOSITION REQUIREMENTS FOR FILLER METALS FOR VACUUM SERVICE

AWS Classification	UNS Number	Chemical Composition, Weight Percent[a,b,c]												
		Ag	Au	Cu	Ni	Co	Sn	Pd	In	Zn	Cd	Pb	P	C
Grade 1														
BVAg-0	P07017	99.95 min	—	0.05	—	—	—	—	—	0.001	0.001	0.002	0.002	0.005
BVAg-6b	P07507	49.0–51.0	—	Remainder	—	—	—	—	—	0.001	0.001	0.002	0.002	0.005
BVAg-8	P07727	71.0–73.0	—	Remainder	—	—	—	—	—	0.001	0.001	0.002	0.002	0.005
BVAg-8b	P07728	70.5–72.5	—	Remainder	0.3–0.7	—	—	—	—	0.001	0.001	0.002	0.002	0.005
BVAg-18	P07607	59.0–61.0	—	Remainder	—	—	9.5–10.5	—	—	0.001	0.001	0.002	0.002	0.005
BVAg-29	P07627	60.5–62.5	—	Remainder	—	—	—	—	14.0–15.0	0.001	0.001	0.002	0.002	0.005
BVAg-30	P07687	67.0–69.0	—	Remainder	—	—	—	4.5–5.5	—	0.001	0.001	0.002	0.002	0.005
BVAg-31	P07587	57.0–59.0	—	31.0–33.0	—	—	—	Remainder	—	0.001	0.001	0.002	0.002	0.005
BVAg-32	P07547	53.0–55.0	—	20.0–22.0	—	—	—	Remainder	—	0.001	0.001	0.002	0.002	0.005
BVAu-2	P00807	—	79.5–80.5	Remainder	—	—	—	—	—	0.001	0.001	0.002	0.002	0.005
BVAu-4	P00827	—	81.5–82.5	—	Remainder	—	—	—	—	0.001	0.001	0.002	0.002	0.005
BVAu-7	P00507	—	49.5–50.5	—	24.5–25.5	0.06	—	Reaminder	—	0.001	0.001	0.002	0.002	0.005
BVAu-8	P00927	—	91.0–93.0	—	—	—	—	Remainder	—	0.001	0.001	0.002	0.002	0.005
BVPd-1	P03657	—	—	—	0.06	Remainder	—	64.0–66.0	—	0.001	0.001	0.002	0.002	0.005
Grade 2														
BVAg-0	P07017	99.95 min	—	0.05	—	—	—	—	—	0.002	0.002	0.002	0.002	0.005
BVAg-6b	P07507	49.0–51.0	—	Remainder	—	—	—	—	—	0.002	0.002	0.002	0.02	0.005
BVAg-8	P07727	71.0–73.0	—	Remainder	—	—	—	—	—	0.002	0.002	0.002	0.02	0.005
BVAg-8b	P07728	70.5–72.5	—	Remainder	0.3–0.7	—	—	—	—	0.002	0.002	0.002	0.02	0.005
BVAg-18	P07607	59.0–61.0	—	Remainder	—	—	9.5–10.5	—	—	0.002	0.002	0.002	0.02	0.005
BVAg-29	P07627	60.5–62.5	—	Remainder	—	—	—	—	14.0–15.0	0.002	0.002	0.002	0.02	0.005
BVAg-30	P07687	67.0–69.0	—	Remainder	—	—	—	4.5–5.5	—	0.002	0.002	0.002	0.02	0.005
BVAg-31	P07587	57.0–59.0	—	31.0–33.0	—	—	—	Remainder	—	0.002	0.002	0.002	0.002	0.005
BVAg-32	P07547	53.0–55.0	—	20.0–22.0	—	—	—	Remainder	—	0.002	0.002	0.002	0.002	0.005
BVAu-2	P00807	—	79.5–80.5	Remainder	—	—	—	—	—	0.002	0.002	0.002	0.002	0.005
BVAu-4	P00827	—	81.5–82.5	—	Remainder	—	—	—	—	0.002	0.002	0.002	0.002	0.005
BVAu-7	P99507	—	49.5–50.5	—	24.5–25.5	0.06	—	Remainder	—	0.002	0.002	0.002	0.002	0.005
BVAu-8	P00927	—	91.0–93.0	—	—	—	—	Remainder	—	0.002	0.002	0.002	0.002	0.005
BVPd-1	P03657	—	—	—	0.06	Remainder	—	64.0–66.0	—	0.002	0.002	0.002	0.002	0.005
BVCu-1x	C14181	—	—	99.99 min	—	—	—	—	—	0.002	0.002	0.002	0.002	0.005

NOTES:

a. The filler metal shall be analyzed for those specific elements for which values are shown in this table. If the presence of other elements is indicated in the course of this work, the amount of those elements shall be determined.

b. All other elements in addition to those listed in the table above, with a vapor pressure higher than 10^{-7} torr at 932°F (500°C) (such as Mg, Sb, K, Na, Li, Tl, S, Cs, Rb, Se, Te, Sr and Ca) are limited to 0.001 percent each for Grade 1 filler metals and 0.002 percent each for Grade 2 filler metals. The total of all these high vapor pressure elements (including zinc, cadmium, and lead) is limited to 0.010 percent. The total of other elements not designated as high vapor pressure elements is limited to 0.05 percent, except for BVCu-1x, for which the total shall be 0.015 percent, max.

c. Single values are maximum, unless noted.

TABLE 7
POWDER MESH DESIGNATIONS AND PARTICLE SIZE DISTRIBUTION*

Designations	Particle Size Distribution	
	Sieve Size	Distribution Percent
100 mesh	Through No. 60 (250μ)	100
	Through No. 100 (149μ)	95 min
140 C mesh	On No. 100 (149μ)	0.5 max
	On No. 140 (105μ)	10 max
	Through No. 325 (45μ)	20 max
140 F mesh	On No. 100 (149μ)	0.5 max
	On No. 140 (105μ)	10 max
	Through No. 325 (45μ)	55 max
325 mesh	On No. 200 (74μ)	0.5 max
	On No. 325 (45μ)	10 max
	Through No. 325 (45μ)	90 min

* These are standard ASTM sieve sizes selected from Table 1 of ASTM E11, *Standard Specification for Wire Cloth Sieves for Testing Purposes.*

firing at a temperature of at least 2012°F (1100°C), and stored in a dust-free container, may be used.

10.2 The container with the sample shall be placed in a combustion tube muffle made of dense polycrystalline alumina, or fused silica. The muffle shall be purged with dry hydrogen [–40°F (–40°C) dew point or lower], and the sample shall be heated to a temperature of 36°F (20°C) above the liquidus temperature established for the material (See Table A1). It shall be held at that temperature for ten minutes, then allowed to cool in the muffle to a temperature no higher than 150°F (65°C). At that time the flow of hydrogen shall be stopped, and the sample shall be removed for examination.

10.3 The fused sample shall be examined at a magnification of 5×. If it has melted completely, and has no more than a light smokiness on the surface and no discrete black specks, it meets the requirements of the cleanliness test.

11. Spatter Test

11.1 The spatter test shall be performed at the same time as the melt cleanliness test by bridging the crucible or boat with a nickel channel, the legs of which are designed to allow a small clearance, 0.06 in. (1.5 mm) maximum, above the crucible. The bridge shall be no more than 0.38 in. (9.6 mm) above the filler metal.

11.2 Upon completion of the test, the bottom side of the nickel channel shall be examined at a 5× magnification for evidence of any spatter. If there is no evidence of spatter, the sample meets the requirements.

12. Binder Content of Transfer Tape

12.1 The binder content of transfer tape shall be determined by the following method:

12.1.1 A strip of Type 304 stainless steel approximately 0.031 × 0.5 × 2 in. (0.8 × 13 × 51 mm), shall be weighed and the weight shall be recorded as Weight A.

12.1.2 The transfer tape shall be shaped to the dimensions of the stainless steel strip, applied to the strip, the plastic carrier removed, and the composite weighed. This weight shall be recorded as Weight B.

12.1.3 Heat the composite in a vacuum or other protective atmosphere furnace to a temperature above 1000°F (538°C), cool under the protective atmosphere, to less than 300°F (150°C) remove from the furnace and reweigh. This weight shall be recorded as Weight C.

12.1.4 The percentage of binder shall be calculated as follows:

$$\text{Percentage of binder} = \frac{\text{Weight B} - \text{Weight C}}{\text{Weight B} - \text{Weight A}} \times 100$$

12.2 To meet the requirements, the binder content of transfer tape shall be 6.0 percent maximum except when otherwise agreed between purchaser and supplier.

PART C — MANUFACTURE, IDENTIFICATION AND PACKAGING

13. Method of Manufacture

Brazing filler metals classified according to this specification may be manufactured by any method that will produce filler metals that meet the requirements of this specification.

14. Standard Forms, Sizes and Tolerances

14.1 Standard forms and sizes of brazing filler metals shall be as shown in Table 8.

14.2 Dimensional tolerances of wrought wire, rod, sheet, and strip shall be in accordance with Table 9 and 10, as applicable.

TABLE 8
STANDARD FORMS AND SIZES

AWS Classification	Standard Form	Standard Sizes: Dimensions Specified	Standard Sizes: Width, Length, or Mesh Size	Standard Sizes: Thickness or Diameter, in.	Standard Sizes: Thickness or Diameter, mm
	Strip[a] (Coiled or Spooled)	Width and Thickness	0.25 (6.4 mm) to 6.0 in. (150 mm) in multiples of 0.25 in.	0.002 0.003 0.005 0.010 0.020	0.05 0.08 0.13 0.25 0.51
BAg All Classifications	Round Wire (coiled or spooled), rod (straight lengths)	Diameter for wire	—	—	—
	—	Length and Diameter for Rod	18 in. (455 mm) and 36 in. (910 mm)	1/32 (0.31) 3/64 (0.047) 1/16 (0.062) 3/32 (0.094) 1/8 (0.125)	0.8 1.2 1.6 2.4 3.2
	Powder and Paste	Mesh Size	100 140C 140F 325		
BVAg All Classifications	Strip, wire (coiled or spooled) and powder	Dimensions shall be as specified on purchase order or contract.			
BAu, BVAu, BVPd, All Classifications	Strip, wire (coiled or spooled) and powder	Dimensions shall be as specified on purchase order or contract.			

(continued)

TABLE 8 (CONT'D)
STANDARD FORMS AND SIZES

AWS Classification	Standard Form	Standard Sizes: Dimensions Specified	Standard Sizes: Width, Length, or Mesh Size	Standard Sizes: Thickness or Diameter, in.	Standard Sizes: Thickness or Diameter, mm
BAlSi, BMg, All Classifications	Sheet (coiled)[b]	Thickness		0.010 0.015 0.020	0.25 0.38 0.51
BAlSi-3 BAlSi-4 BMg-1	Wire (coiled) or Rod (Straight lengths)	Length and diameter for rod	36 in. (455 mm)	1/16 (0.062) 3/32 (0.094) 1/8 (0.125) 5/32 (0.156) 3/16 (0.188)	1.6 2.4 3.2 4.0 4.8
BAlSi-4	Powder and Paste	Mesh Size	100		
BCuP-1 BCuP-5	Strip (coiled or spooled)	Width and Thickness	0.25 in. (6.4 mm) to 6 in. (150 mm) in multiples of 0.25 in.	0.003 0.005 0.010 0.025	0.08 0.13 0.25 0.6
BCuP All Classifications	Round wire (coiled or spooled)	Diameter	—	0.050 0.062 0.094 0.109 0.125 0.250	1.3 1.6 2.4 2.8 3.2 6.4
	Round rod (straight lengths)	Length and Diameter	18 in. (455 mm) and 36 in. (910 mm)		
	Rectangular wire (coils or spools)	Width and Thickness	1/16 in. (1.6 mm) to 1/4 in. (6.4 mm) width in multiples of 1/32 in.		
	Rectangular rod (straight lengths)	Width, Length and Thickness	1/16, 3/32 and 1/8 in. (1.6, 2.4, and 3.2 mm) wide 18 in. (455 mm) and 36 in. (910 mm) lengths		
	Powder and Paste	Mesh Size	100 140C 140F 325		
BCu-1 RBCuZn-A	Strip (coiled or spooled)	Dimensions shall be as specified on purchase order or contract.			
BCu-1 RBCuZn-A RBCuZn-C RBCuZn-D	Round wire (coiled)	Diameter	—	1/32 (0.031) 1/16 (0.062) 3/32 (0.096) 1/8 (0.125) 5/32 (0.156) 3/16 (0.188) 1/4 (0.250) 5/16 (0.312) 3/8 (0.375)	0.8 1.6 2.4 3.2 4.0 4.8 6.4 8.0 9.5
	Rod (straight lengths)	Length and Diameter	18 in. (455 mm) and 36 in. (910 mm)		
BCu-1a BCu-2	Powder and Paste	Mesh Size	140C 140F 325		

(continued)

TABLE 8 (CONT'D)
STANDARD FORMS AND SIZES

AWS Classification	Standard Form	Standard Sizes: Dimensions Specified	Width, Length, or Mesh Size	Thickness or Diameter: in.	Thickness or Diameter: mm
BVCu-1x	Strip, round wire (coils or spools)	Dimensions shall be as specified on purchase order or contract.			
BNi All Classifications except BNi-5a	Cast round rod (straight lengths)[c]	Diameter		1/16 (0.062)	1.6
				1/8 (0.125)	3.2
BCo	Cast and wrought (borided) foil	Width and Thickness	1/8 in. (3.2 mm) to 4 in. (102 mm)	0.001	0.025
				0.0015[d]	0.037
				0.002	0.05
				0.0025	0.06
	Bonded powder rope, sheet and transfer tape[e]	Dimensions shall be as specified on purchase order or contract.			
	Powder and paste	Mesh Size	140C 140F 325		
BNi-5a	foil		1/8 in. (3.2 mm) to 4 in. (102 mm)	0.001	0.025
				0.0015	0.037
				0.002	0.05
				0.0025	0.05

NOTES:
a. BAg-2, -3, -4, -22 and -26 as filler metal clad or bonded to each side of a copper core is also a standard form. The standard thickness ratio of filler metal:copper core:filler metal cladding is 1:2:1 or 1:4:1.
b. BAlSi-2, -5, -7, -9 and -11 filler metal clad or bonded to one or both sides of an aluminum alloy is also standard form. The standard thickness of the filler metal cladding is 5 to 10 percent of the thickness of the aluminum alloy core.
c. Tolerances listed in Table 9 do not apply for cast rod forms.
d. Available in widths up to 2 in. (50 mm).
e. Tolerances listed in Table 10 do not apply for these bonded powder forms.

14.3 Size and tolerances of cast rod, transfer tape, bonded sheet and bonded rope shall be as agreed upon between the purchaser and supplier.

15. Special Identification Labels or Marking

15.1 Filler metal identification is to be accomplished by tags, labels or appropriate marking of the unit package. Unit packages include coils, spools, bundles, mandrels, and containers. Specific marking requirements are contained in Section 17.

15.2 When required by the purchase order or contract, special identification, of individual pieces of filler metal shall be included beyond the identification of the unit package. When so prescribed, the use of pressure sensitive labels or imprint marking shall become a requirement for conformance of filler metals to this specification.

16. Packaging

Brazing filler metals shall be suitably packaged to ensure against damage during shipment or storage under normal conditions.

TABLE 9
TOLERANCES FOR WROUGHT WIRE AND ROD[a]

				Tolerances ±					
						Rectangular			
		Nominal Size[b]		Round		Thickness		Width	
Form	Condition	in.	mm	in.	mm	in.	mm	in.	mm
Wire	Cold Drawn or Cold Rolled	0.010–0.020 incl.	0.25–0.51	0.0003	0.008	0.0008	0.020	0.005	0.13
		over 0.020–0.030 incl.	0.51–0.8	0.0005	0.013	0.0016	0.041	0.005	0.13
		over 0.030–0.040 incl.	0.8–1.0	0.0007	0.018	0.0018	0.046	0.005	0.13
		over 0.040–0.050 incl.	1.0–1.3	0.0008	0.020	0.0020	0.051	0.005	0.13
		over 0.050–0.060 incl.	1.3–1.5	0.0010	0.025	0.0025	0.064	0.005	0.13
		over 0.060–0.080 incl.	1.5–2.0	0.0015	0.038	0.003	0.08	0.005	0.13
		over 0.080–0.250 incl.	2.0–6.4	0.0020	0.051	0.004	0.10	0.005	0.13
Rod	Cold Drawn or Cold Rolled (round, rectangular or square)	5/32 and under	4.0	0.003	0.08	0.009	0.23	0.010	0.25
		3/16 and over	4.8	0.004	0.10	0.010	0.25	0.010	0.25
Rod & Wire	Hot Rolled or Extruded	3/64–1/16 incl.	1.2–1.6	0.005	0.13	0.008	0.20	0.010	0.25
		over 1/16–1/8 incl.	1.6–3.2	0.006	0.15	0.009	0.23	0.010	0.25
		over 1/8–3/16 incl.	3.2–4.8	0.007	0.18	0.009	0.23	0.010	0.25
		over 3/16–1/4 incl.	4.8–6.4	0.008	0.20	0.010	0.25	0.010	0.25

NOTES:
a. Tolerances for cast rod shall be as agreed by purchaser and supplier.
b. Diameter for round; thickness or width for rectangular.

17. Marking of Packages

17.1 The following product information (as a minimum) shall be legibly marked on the outside of each unit package:

(1) AWS classification and specification (including the year of issue)

(2) Supplier's name and trade designation

(3) Size and net weight

(4) Lot, control, or heat number

(5) Date of manufacture for tape and paste

17.2 Marking of any overpacking of unit packages only requires conformance with regulation of D.O.T. or other shipping agencies. Items listed in 17.1 are not required in any overpacking.

17.3 The following precautionary information (as a minimum) shall be prominently displayed in legible print on all packages of brazing filler metals including individual unit packages enclosed within a larger package.

WARNING:

Protect yourself and others.

Read and understand this information.

FUMES AND GASES can be dangerous to your health.

HEAT RAYS (INFRARED RADIATION from flame or hot metal) can injure eyes.

- Before use, read, understand, and follow the manufacturer's instructions, Material Safety Data Sheets (MSDSs), and your employer's safety practices.
- Keep your head out of the fumes.
- Use enough ventilation, exhaust at the work, or both, to keep fumes and gases from your breathing zone and the general area.
- Wear correct eye, ear, and body protection.
- See American National Standard Z49.1, *Safety in Welding and Cutting,* published by the American Welding Society, 550 N.W. LeJeune Road, P.O. Box 351040, Miami, Florida 33135; *OSHA Safety and Health Standards,* 29 CFR 1910, available

TABLE 10
TOLERANCES FOR FOIL STRIP AND SHEET

Nominal Thickness		Thickness Tolerance ±			
		Width 8 in. (200 mm) and under		Width over 8 in. (200 mm)	
in.	mm	in.	mm	in.	mm
0.006 and under	0.15 and under	0.0006	0.015	0.0008	0.020
over 0.006–0.013 incl.	over 0.15–0.33 incl.	0.0010	0.025	0.0010	0.025
over 0.013–0.021 incl.	over 0.33–0.53 incl.	0.0015	0.038	0.0015	0.038
over 0.021–0.026 incl.	over 0.53–0.66 incl.	0.0020	0.05	0.0020	0.051

Nominal Width		Width Tolerance ±			
		Thickness of 0.062 in. (1.59 mm) and under		Thickness of 0.063 in. (1.60 mm) to 0.125 in. (3.18 mm) incl.	
in.	mm	in.	mm	in.	mm
0.062–1.0	1.59 to 25 incl.	0.005	0.13	0.007	0.18
over 1.0–2.0 incl.	over 25–51 incl.	0.005	0.13	0.009	0.23
over 2.0–6.0 incl.	over 51–152 incl.	0.005	0.13	0.012	0.30
over 6.0–15.0 incl.	over 152–381 incl.	0.007	0.18	0.017	0.43
over 15.0–20.0 incl.	over 381–508 incl.	0.007	0.18	0.017	0.43

from the U.S. Government Printing Office, Washington, DC 20402.

DO NOT REMOVE THIS LABEL

17.4 In addition to the precautionary information in 17.3, all packages (including individual unit packages enclosed within a larger package) of BAg-1, BAg-1a, BAg-2, BAg-2a, BAg-3, BAg-27, and BAg-33 shall have as a minimum, the following cadmium warning, permanently affixed and prominently displayed in legible print.

DANGER:

CONTAINS CADMIUM. Protect yourself and others. Read and understand this label.

FUMES ARE POISONOUS AND CAN KILL

- Before use, read, understand, and follow the manufacturer's instructions, Material Safety Data Sheets (MSDSs) and your employer's safety practices.
- Do not breathe fumes. Even brief exposure to high concentrations should be avoided.
- Use only with enough ventilation, exhaust at the work, or both to keep fumes from your breathing zone and the general area. If this cannot be done, use air supplied respirators.
- Keep children away when using.
- See American Standard Z49.1, *Safety in Welding and Cutting* available from the American Welding Society, 550 N.W. LeJeune Road, P.O. Box 351040 Miami, Florida 33135; *OSHA Safety and Health Standards,* 29 CFR 1910, available from the U.S. Government Printing Office, Washington, DC 20402.

If chest pain, shortness of breath, cough, or fever develop after use, obtain medical help immediately.

DO NOT REMOVE THIS LABEL

Appendix
Guide to AWS Specification for Filler Metals for Brazing and Braze Welding

(This Appendix is not a part of ANSI/AWS A5.8-92, *Specification for Filler Metals for Brazing and Braze Welding,* but is included for information only.)

A1. Introduction

A1.1 This guide has been prepared as an aid to users of brazing filler metals, to help them determine which classification of brazing filler metal is best for a particular job. The AWS *Brazing Handbook* should be consulted for more detailed information. If the component will have critical applications, the latest edition of ANSI/AWS C3.3, *Recommended Practices for Design, Manufacture, and Inspection of Critical Brazed Components,* should be followed.

A1.2 This specification is intended to provide both the supplier and the user of brazing filler metals with a guide for production control and a basis of acceptance through mutually acceptable standard requirements. This specification classifies only those filler metals that were commercially significant at the time it was issued. Other brazing filler metals, as they become commercially significant, may be added to the specification, and those that lose their commercial significance may be dropped.

A1.3 Brazing is a group of welding processes that produces coalescence of materials by heating them to the brazing temperature in the presence of a filler metal having a liquidus above 840°F (450°C) and below the solidus of the base metal. The filler metal is distributed between the closely fitted faying surfaces of the joint by capillary action.

A1.4 Brazing filler metals are metals that are added when making a braze. They have a liquidus below that of the materials being brazed and above 840°F (450°C), with properties suitable for making joints by capillary action between closely fitted surfaces.

A2. Method of Classification

A2.1 The classification method for brazing filler metals is based on chemical composition rather than on mechanical property requirements. The mechanical properties of a brazed joint depend, among other things, on the base metal and filler metal used. Therefore, a classification method based on mechanical properties would be misleading since it would only apply if the brazing filler metal were used on a given base metal with a specific joint design. If a user of brazing filler metal desires to determine the mechanical properties of a given base metal and filler metal combination, tests should be conducted using the latest edition of ANSI/AWS C3.2, *Standard Method for Evaluating the Strength of Brazed Joints.*

A2.2 Brazing filler metals are standardized into seven groups of classifications as follows: silver, gold, aluminum, copper, nickel, cobalt, and magnesium filler metals. Many filler metals of these classifications are used for joining assemblies for vacuum applications, such as vacuum tubes and other electronic devices. For these critical applications, it is desirable to hold the high vapor pressure elements to a minimum, as they usually contaminate the vacuum with vaporized elements during operation of the device. Filler metals for electronic devices have been incorporated as additional "vacuum grade" classifications within this specification.

A2.3 The basic groups of classifications of brazing filler metal are identified, as shown in Tables 1 through 6, by the principal element in their chemical composition. In a typical example, such as BCuP-2, the "B" is for brazing filler metal (as the "E" for electrodes and the "R" for welding rods in other AWS specifications). The "RB" in RBCuZn-A, RBCuZn-C, and

RBCuZn-D indicates that the filler metal is suitable as a welding rod and as a brazing filler metal. "CuP" is for copper-phosphorus, the two principal elements in this particular brazing filler metal. (Similarly, in other brazing filler metals, Si is for silicon, Ag for silver, etc., using standard chemical symbols.) The numeral or letter following the chemical symbol indicates chemical composition within a group.

The vacuum grade nomenclature follows the examples above, with two exceptions. The first exception is the addition of the letter "V", yielding the generic letters "BV" for brazing filler metals for vacuum service. The second exception is the use of the grade suffix number: Grade 1 to indicate the more stringent requirements for high vapor pressure impurities, and Grade 2 to indicate less stringent requirements for high vapor pressure impurities. Vacuum grade filler metals are considered to be spatter-free. Therefore, this specification no longer lists spatter-free and nonspatter-free vacuum grades. An example of a filler metal for vacuum service is BVAg-6b, Grade 1. Table 6 lists filler metals for vacuum service.

A3. Acceptance

Acceptance of all brazing filler metals classified under this specification is in accordance with ANSI/AWS A5.01, *Filler Metal Procurement Guidelines,* as this specification states. Any testing a purchaser requires of the supplier, for filler metal shipped in accordance with this specification, should be clearly stated in the purchase order, according to the provisions of ANSI/AWS A5.01. In the absence of any such statement in the purchase order, the supplier may ship the filler metal with whatever testing the supplier normally conducts on filler metal of that classification, as specified in Schedule F, Table 1, of ANSI/AWS A5.01. Testing in accordance with any other Schedule in that Table should be specifically required by the purchase order. In such cases, acceptance of the filler metal shipped should be in accordance with those requirements.

A4. Certification

The act of placing the AWS specification and classification designations on the packaging enclosing the product, or the classification on the product itself, constitutes the supplier's or manufacturer's certification that the product meets all of the requirements of the specification.

The only testing requirement implicit in this "certification" is that the manufacturer has actually conducted the tests required by the specification on filler metal that is representative of that being shipped and that the filler metal met the requirements of this specification. Representative filler metal, in this case, is any production run of that classification from the same heat or lot. The basis for the certification required by the specification is the classification test of "representative filler metal" cited above, and the Manufacturer's Quality Assurance Program in ANSI/AWS A5.01.

A5. Ventilation During Brazing

A5.1 The following five major factors govern the quantity of fumes to which brazers and brazing operators can be exposed during brazing:

(1) Dimensions of the space in which brazing is done (with special regard to the height of the ceiling)

(2) Number of brazers and brazing operators working in that space

(3) Rate of evolution of fumes, gases, or dust, according to the materials and processes involved

(4) The proximity of the brazer or brazing operators to the fumes as they issue from the brazing zone, and to the gases and dusts in the space in which they are working

(5) The ventilation provided to the space in which the brazing is done

A5.2 American National Standard Z49.1-88 discusses the ventilation that is required during welding and should be referred to for details. Attention is particularly drawn to Section 5 of that document, "Ventilation."

A6. Brazing Considerations

A6.1 To avoid confusion, solidus and liquidus are specified instead of melting and flow points. The terms solidus and liquidus are defined as follows:[6]

(1) Solidus. The highest temperature under equilibrium conditions at which the metal is completely solid; that is, the temperature at which melting starts.

(2) Liquidus. The lowest temperature under equilibrium conditions at which the metal is completely liquid; that is, the temperature at which freezing starts.

A6.2 Table A1 in the Appendix lists the solidus, liquidus, and also the recommended brazing temperature range for the various brazing filler metals. When brazing with some brazing filler metals (particularly those with a wide temperature range between solidus and liquidus), the several constituents of the filler metals tend to separate during the melting process. The lower melting

[6] ASM Handbook, 8th Ed. Vol 1.

TABLE A1
SOLIDUS, LIQUIDUS, AND BRAZING TEMPERATURE RANGES*

AWS Classification	Solidus		Liquidus		Brazing Temperature Range	
	°F	°C	°F	°C	°F	°C
			SILVER			
BAg-1	1125	607	1145	618	1145–1400	618–760
BAg-1a	1160	627	1175	635	1175–1400	635–760
BAg-2	1125	607	1295	702	1295–1550	702–843
BAg-2a	1125	607	1310	710	1310–1550	710–843
BAg-3	1170	632	1270	688	1270–1500	688–816
BAg-4	1240	671	1435	779	1435–1650	779–899
BAg-5	1225	663	1370	743	1370–1550	743–843
BAg-6	1270	688	1425	774	1425–1600	774–871
BAg-7	1145	618	1205	652	1205–1400	652–760
BAg-8	1435	779	1435	779	1435–1650	779–899
BAg-8a	1410	766	1410	766	1410–1600	766–871
BAg-9	1240	671	1325	718	1325–1550	718–843
BAg-10	1275	691	1360	738	1360–1550	738–843
BAg-13	1325	718	1575	857	1575–1775	857–968
BAg-13a	1420	771	1640	893	1600–1800	871–982
BAg-18	1115	602	1325	718	1325–1550	718–843
BAg-19	1400	760	1635	891	1610–1800	877–982
BAg-20	1250	677	1410	766	1410–1600	766–871
BAg-21	1275	691	1475	802	1475–1650	802–899
BAg-22	1260	680	1290	699	1290–1525	699–830
BAg-23	1760	960	1780	970	1780–1900	970–1038
BAg-24	1220	660	1305	750	1305–1550	750–843
BAg-26	1305	705	1475	800	1475–1600	800–870
BAg-27	1125	605	1375	745	1375–1575	745–860
BAg-28	1200	649	1310	710	1310–1550	710–843
BAg-33	1125	607	1260	682	1260–1400	681–760
BAg-34	1200	649	1330	721	1330–1550	721–843
BAg-35	1265	685	1390	754	1390–1545	754–841
BAg-36	1195	646	1251	677	1251–1495	677–813
BAg-37	1270	688	1435	779	1435–1625	779–885
BVAg-0	1761	961	1761	961	1761–1900	961–1038
BVAg-6b	1435	779	1602	872	1600–1800	871–982
BVAg-8	1435	779	1435	779	1435–1650	779–899
BVAg-8b	1435	779	1463	795	1470–1650	799–899
BVAg-18	1115	602	1325	718	1325–1550	718–843
BVAg-29	1155	624	1305	707	1305–1450	707–788
BVAg-30	1485	807	1490	810	1490–1700	810–927
BVAg-31	1515	824	1565	852	1565–1625	852–885
BVAg-32	1650	900	1740	950	1740–1800	950–982
			GOLD			
BAu-1	1815	991	1860	1016	1860–2000	1016–1093
BAu-2	1635	891	1635	891	1635–1850	891–1010
BAu-3	1785	974	1885	1029	1885–1995	1029–1091
BAu-4	1740	949	1740	949	1740–1840	949–1004
BAu-5	2075	1135	2130	1166	2130–2250	1166–1232
BAu-6	1845	1007	1915	1046	1915–2050	1046–1121
BVAu-2	1635	891	1635	891	1635–1850	891–1010
BVAu-4	1740	949	1740	949	1740–1840	949–1004
BVAu-7	2015	1102	2050	1121	2050–2110	1121–1154
BVAu-8	2190	1200	2265	1240	2265–2325	1240–1274

TABLE A1 (CONT'D)
SOLIDUS, LIQUIDUS, AND BRAZING TEMPERATURE RANGES*

AWS Classification	Solidus		Liquidus		Brazing Temperature Range	
	°F	°C	°F	°C	°F	°C
			PALLADIUM			
BVPd-1	2245	1230	2255	1235	2255–2285	1235–1252
			ALUMINUM			
BAlSi-2	1070	577	1142	617	1110–1150	599–621
BAlSi-3	970	521	1085	585	1060–1120	571–604
BAlSi-4	1070	577	1080	582	1080–1120	582–604
BAlSi-5	1070	577	1095	591	1090–1120	588–604
BAlSi-7	1038	559	1105	596	1090–1120	588–604
BAlSi-9	1044	562	1080	582	1080–1120	582–604
BAlSi-11	1038	559	1105	596	1090–1120	588–604
			COPPER			
BCu-1	1981	1083	1981	1083	2000–2100	1093–1149
BCu-1a	1981	1083	1981	1083	2000–2100	1093–1149
BVCu-1X	1981	1083	1981	1083	2000–2100	1093–1149
BCu-2	1981	1083	1981	1083	2000–2100	1093–1149
RBCuZn-A	1630	888	1650	899	1670–1750	910–954
RBCuZn-B	1590	866	1620	882	1620–1800	882–982
RBCuZn-C	1590	866	1630	888	1670–1750	910–954
RBCuZn-D	1690	921	1715	935	1720–1800	938–982
BCuP-1	1310	710	1695	924	1450–1700	788–927
BCuP-2	1310	710	1460	793	1350–1550	732–843
BCuP-3	1190	643	1495	813	1325–1500	718–816
BCuP-4	1190	643	1325	718	1275–1450	691–788
BCuP-5	1190	643	1475	802	1300–1500	704–816
BCuP-6	1190	643	1450	788	1350–1500	732–816
BCuP-7	1190	643	1420	771	1300–1500	704–816
			NICKEL			
BNi-1	1790	977	1900	1038	1950–2200	1066–1204
BNi-1a	1790	977	1970	1077	1970–2200	1077–1204
BNi-2	1780	971	1830	999	1850–2150	1010–1177
BNi-3	1800	982	1900	1038	1850–2150	1010–1177
BNi-4	1800	982	1950	1066	1850–2150	1010–1177
BNi-5	1975	1079	2075	1135	2100–2200	1149–1204
BNi-5a	1931	1065	2111	1150	2100–2200	1149–1204
BNi-6	1610	877	1610	877	1700–2000	927–1093
BNi-7	1630	888	1630	888	1700–2000	927–1093
BNi-8	1800	982	1850	1010	1850–2000	1010–1093
BNi-9	1930	1055	1930	1055	1950–2200	1066–1204
BNi-10	1780	970	2020	1105	2100–2200	1149–1204
BNi-11	1780	970	2003	1095	2100–2200	1149–1204
			COBALT			
BCo-1	2050	1120	2100	1149	2100–2250	1149–1232
			MAGNESIUM			
BMg-1	830	443	1110	599	1120–1160	604–627

*Solidus and liquidus shown are for the nominal composition in each classification.

constituent will flow, leaving behind an unmelted residue or skull of the high-melting constituent. This occurrence, called liquation, is usually undesirable in that the unmelted skull does not readily flow into the joint. However, where wide joint clearance occurs, a filler metal with a wide temperature range will usually fill the capillary joint more easily.

A6.3 Brazing requires an understanding of several elements of procedures which are beyond the scope of this Appendix. The latest edition of the AWS *Brazing Handbook* should be referred to for particulars on such items as cleaning, brazing fluxes, brazing atmospheres, joint clearances, etc. Also, the latest edition of ANSI/AWS C3.3, *Recommended Practices for Design, Manufacture, and Inspection of Critical Brazed Components,* should be referred to for information on procedures for critical components.

A7. Brazing Characteristics and Applications

A7.1 BAg Classifications (Silver). Brazing filler metals of the BAg classifications are used for joining most ferrous and nonferrous metals, except aluminum and magnesium. These filler metals have good brazing properties and are suitable for preplacement in the joint, or for manual feeding into the joint. Although lap joints are generally used, butt joints may be used if requirements are less stringent. Joint clearances of 0.001 to 0.005 in. (0.025 to 0.13 mm) are recommended for proper capillary action. Flux is generally required, however, on most metals. When furnace brazing in a protective atmosphere, flux is generally not required. If filler metals containing zinc or cadmium are used in a protective atmosphere furnace, the zinc or cadmium is vaporized changing chemical composition as well as the solidus and liquidus. Therefore, filler metals free of cadmium or zinc are recommended for furnace brazing in a protective atmosphere.

A7.1.1 BAg-1 brazing filler metal has the lowest brazing temperature range of the BAg filler metals. It also flows most freely into narrow clearance capillary joints. Its narrow melting range is suitable for rapid or slow methods of heating. This filler metal contains cadmium. The special precautions of the warning label in 17.4 should be followed. BAg-1 is more economical (less silver) than BAg-1a.

A7.1.2 BAg-1a brazing filler metal has properties similar to BAg-1. BAg-1a has a narrower melting range than BAg-1 making it slightly more free-flowing. It also has a higher silver plus copper : zinc plus cadmium ratio resulting in a slight increase in its resistance to corrosion in chlorine, sulfur, and steam environments. Either composition may be used where low-temperature, free-flowing filler metals are desired. This filler metal contains cadmium. The special precautions of the warning label in 17.4 should be followed.

A7.1.3 BAg-2 brazing filler metal, like BAg-1, is free-flowing and suited for general-purpose work. Its broader melting range is helpful where clearances are wide or are not uniform. Unless heating is rapid, care must be taken that the lower melting constituents do not separate out by liquation. This filler metal contains cadmium, and the special precautions of the warning label in 17.4 should be followed.

A7.1.4 BAg-2a brazing filler metal is similar to BAg-2, but is more economical than BAg-2, since it contains five percent less silver. This filler metal contains cadmium. The special precautions of the warning label in 17.4 should be followed.

A7.1.5 BAg-3 brazing filler metal is a modification of BAg-1a, i.e., nickel is added. It has good corrosion resistance in marine environment and caustic media. When used on stainless steel, it will inhibit crevice (interface) corrosion. Because its nickel content improves wetability on tungsten carbide tool tips, the largest use is to braze carbide tool assemblies. Melting range and low fluidity make BAg-3 suitable for forming larger fillets or filling wide joint clearances. This filler metal contains cadmium. The special precautions of the warning label in 17.4 should be followed.

A7.1.6 BAg-4 brazing filler metal, like BAg-3, is used extensively for carbide tip brazing, but flows less freely than BAg-3. This filler metal does not contain cadmium.

A7.1.7 BAg-5 and -6 brazing filler metals are used especially for brazing in the electrical industry. They are also used, along with BAg-7 and -24, in the dairy and food industries where the use of cadmium-containing filler metals is prohibited. BAg-5 is an excellent filler metal for brazing brass parts (such as in ships piping, band instruments, lamps, etc.). Since BAg-6 has a broad melting range and is not so free-flowing as BAg-1 and -2, it is a better filler metal for filling wide joint clearances or forming large fillets.

A7.1.8 BAg-7 brazing filler metal, a cadmium-free substitute for BAg-1, is low-melting with good flow and wetting properties. Typical applications include the following:

(1) For food equipment where cadmium must be avoided

(2) To minimize stress corrosion cracking of nickel or nickel-base alloys at low brazing temperatures

(3) Where the white color will improve color match with the base metal

A7.1.9 BAg-8 brazing filler metal is suitable for furnace brazing in a protective atmosphere without the use of a flux, as well as for brazing procedures requiring a flux. It is usually used on copper or copper alloys. When molten, BAg-8 is very fluid and may flow out over the workpiece surfaces during some furnace brazing applications. It can also be used on stainless steel, nickel-base alloys and carbon steel, although its wetting action on these metals is slow. Higher brazing temperatures will improve flow and wetting.

A7.1.10 BAg-8a brazing filler metal is used for brazing in a protective atmosphere and is advantageous when brazing precipitation-hardening and other stainless steels in the 1400 to 1600°F (760 to 870°C) range. The lithium content serves to promote wetting and to increase the flow of the filler metal on difficult-to-braze metals and alloys. Lithium is particularly helpful on base metals containing minor amounts of titanium or aluminum.

A7.1.11 BAg-9 and -10 filler metals are used particularly for joining sterling silver. These filler metals have different brazing temperatures and so can be used for step brazing of successive joints. The color, after brazing, approximates the color of sterling silver.

A7.1.12 BAg-13 brazing filler metal is used for service temperatures up to 700°F (370°C). Its low zinc content makes it suitable for furnace brazing.

A7.1.13 BAg-13a brazing filler metal is similar to BAg-13, except that it contains no zinc, which is advantageous where volatilization is objectionable in furnace brazing.

A7.1.14 BAg-18 brazing filler metal is similar to BAg-8 in its applications. Its tin content helps promote wetting on stainless steel, nickel-base alloys, and carbon steel. BAg-18 has a lower liquidus than BAg-8 and is used in step brazing applications where fluxless brazing is important.

A7.1.15 BAg-19 brazing filler metal is used for the same applications as BAg-8a. BAg-19 is often used in higher brazing temperature applications where precipitation-hardening heat treatment and brazing are combined.

A7.1.16 BAg-20 brazing filler metal possesses good wetting and flow characteristics, and has a brazing temperature range higher than the popular Ag-Cu-Zn-Cd compositions. Due to its good brazing properties, freedom from cadmium, and a more economical silver content, new uses for this filler metal are being developed.

A7.1.17 BAg-21 brazing filler metal is used in brazing AISI 300 and 400 series stainless steels, as well as the precipitation hardening nickel and steel alloys. BAg-21 is particularly suited to furnace brazing in a protective atmosphere because of the absence of zinc and cadmium. It does not require a flux for proper brazing when the temperature is 1850°F (1010°C) or above. It requires a high brazing temperature, and it flows in a sluggish manner. The nickel-rich layer (halo) formed along the fillet edges during melting and flow of the filler metal prevent crevice (interface) corrosion of stainless steels. This is particularly important for the 400 series steels that do not contain nickel and are, therefore, more susceptible to crevice (interface) corrosion. BAg-21 has been used for brazing stainless steel vanes of aircraft gas turbine engines.

A7.1.18 BAg-22 is a low-temperature, cadmium-free filler metal with improved brazing characteristics over BAg-3, particularly in brazing tungsten carbide tools.

A7.1.19 BAg-23 is a high-temperature, free-flowing filler metal usable both for torch brazing and furnace brazing in a protective atmosphere. This filler metal is mainly used in brazing stainless steel, nickel-base and cobalt-base alloys for high-temperature applications. If this filler metal is used in a hard vacuum atmosphere, a loss of manganese will occur due to its high vapor pressure. Thus, a soft vacuum, produced by inert gas back filling a hard vacuum, is desirable when brazing with this filler metal.

A7.1.20 BAg-24 brazing filler metal is low-melting, free-flowing, cadmium-free, and suitable for use in joining "300" series stainless steels (particularly food-handling equipment and hospital utensils), and small tungsten carbide inserts in cutting tools.

A7.1.21 BAg-26 brazing filler metal is a low-silver, cadmium-free filler metal suitable for carbide and stainless steel brazing. The filler metal is characterized by its low brazing temperature, good wetting and flow, and moderate-strength joints when used with these base metals.

A7.1.22 BAg-27 brazing filler metal is similar to BAg-2 but has lower silver and is somewhat more subject to liquation, due to a wider melting range. This

filler metal contains cadmium. The special precautions of the warning label in 17.4 should be followed.

A7.1.23 BAg-28 brazing filler metal has a lower brazing temperature with a narrower melting range than other cadmium-free classifications with similar silver content. BAg-28 also has free-flowing characteristics.

A7.1.24 BAg-33 brazing filler metal was developed to minimize brazing temperature for a filler metal containing 25 percent silver. It has a lower liquidus and, therefore, a narrower melting range than BAg-27. Its higher total zinc plus cadmium content may require more care during brazing. The special precautions of the warning label in 17.4 should be followed.

A7.1.25 BAg-34 brazing filler metal is a cadmium-free filler metal with free-flowing characteristics. The brazing temperature range is similar to that of BAg-2 and BAg-2a, making it an ideal substitute for these filler metals.

A7.1.26 BAg-35 is a cadmium-free filler metal used for brazing ferrous and nonferrous base metals. It is a moderate temperature filler metal frequently used for production brazing applications.

A7.1.27 BAg-36 is a low temperature, cadmium-free, filler metal suitable for brazing ferrous and nonferrous base metals. The lower brazing temperature makes it a useful replacement for several of the cadmium-bearing classifications.

A7.1.28 BAg-37 brazing filler metal is a cadmium-free material frequently used for brazing steel, copper and brass. The low silver content makes it an economical filler metal suitable for applications where lower ductility is acceptable.

A7.2 BAu Classifications (Gold). Brazing filler metals of the BAu classifications are used for the brazing of iron, nickel, and cobalt base metals where better ductility or a greater resistance to oxidation and corrosion is required. Because of their low rate of interaction with the base metal, they are commonly used on thin base metals. These filler metals are usually used with induction, furnace, or resistance brazing in a protective atmosphere. In these cases, no flux is used. For other applications, a borax-boric acid flux is used.

A7.2.1 BAu-1, -2, and -3 brazing filler metals, when used for different joints in the same assembly, permit variation in brazing temperature so that step-brazing can be used.

A7.2.2 BAu-4 brazing filler metal is used to braze a wide range of high-temperature iron- and nickel-base alloys.

A7.2.3 BAu-5 brazing filler metal is primarily used for joining heat- and corrosion-resistant base metals where corrosion-resistant joints with good strength at high temperatures are required. This filler metal is well suited for furnace brazing under protective atmospheres (including vacuum).

A7.2.4 BAu-6 brazing filler metal is primarily used for joining of iron and nickel-base superalloys for service at elevated temperature. This filler metal is well suited for furnace brazing under protective atmospheres (including vacuum).

A7.3 BAlSi Classifications (Aluminum-Silicon). Brazing filler metals of the BAlSi classifications are used for joining the following grades of aluminum and aluminum alloys: 1060, 1350, 1100, 3003, 3004, 3005, 5005, 5050, 6053, 6061, 6951, 7005, and cast alloys 710.0 and 711.0. Joint clearances of 0.006 to 0.010 in. (0.15 to 0.25 mm) are common for members which overlap less than $^1/_4$ in. (6.4 mm). Joint clearances up to 0.025 in. (0.64 mm) are used for members which overlap more than $^1/_4$ in. Fluxing is essential for all processes, except when brazing aluminum in a vacuum. After brazing with flux, the brazed parts should be cleaned thoroughly. Immersion in boiling water generally will remove the residue. If this is not adequate, the parts are usually immersed in a concentrated commercial nitric acid, or other suitable acid solution and then rinsed thoroughly.

A7.3.1 BAlSi-2 brazing filler metal is available as sheet and as a cladding on one or both sides of a brazing sheet having a core of either 3003 or 6951 aluminum alloy. It is used for furnace and dip brazing only.

A7.3.2 BAlSi-3 is a general purpose brazing filler metal. It is used with all brazing processes, with some casting alloys, and where limited flow is desired.

A7.3.3 BAlSi-4 is a general purpose brazing filler metal. It is used with all brazing processes requiring a free-flowing filler metal and good corrosion resistance.

A7.3.4 BAlSi-5 brazing filler metal is available as sheet and as a cladding on one side or both sides of a brazing sheet having a core of 6951 aluminum alloy. BAlSi-5 is used for furnace and dip brazing at a lower temperature than BAlSi-2. The core alloy employed in brazing sheet with this filler metal cladding can be solution heat-treated and aged.

A7.3.5 BAlSi-7 is a filler metal suitable for brazing in a vacuum, available as a cladding on one or both sides of a brazing sheet having a core of 3003 or 6951 aluminum alloy. The 6951 alloy core can be solution heat-treated and aged after brazing.

A7.3.6 BAlSi-9 is a filler metal suitable for brazing in a vacuum, available as a cladding on one side or both sides of a brazing sheet having a core of 3003 aluminum alloy and is typically used in heat-exchanger applications to join fins made from 5000 or 6000 series aluminum alloys.

A7.3.7 BAlSi-11 is a brazing sheet clad on one or two sides of alloy 3105 to form a composite sheet suitable for brazing in a vacuum, designed for brazing in a multizone furnace where the vacuum level is interrupted one or more times during a brazing cycle. The composite can be used in batch-type vacuum furnaces; however, vacuum sheet suitable for brazing with a 3003 core is more resistant to erosion. The maximum brazing temperature for the BAlSi-11/3105 composite is 1110°F (595°C).

A7.4 BCuP Classifications (Copper-Phosphorus). Brazing filler metals of the BCuP classifications are used primarily for joining copper and copper alloys, although they have some limited use on silver, tungsten, and molybdenum. These filler metals should not be used on ferrous or nickel-base alloys or copper-nickel alloys containing a nickel content in excess of 10 percent as brittle intermetallic compounds are formed at the filler metal/base metal interface. They are suitable for all brazing processes. These filler metals have self-fluxing properties when used on copper; however, a flux is recommended when used on all other base metals, including alloys of copper. Corrosion resistance is satisfactory, except when the joint is in contact with sulfurous atmospheres. It should be noted that the brazing temperature ranges begin below the liquidus (see Table A1).

A7.4.1 BCuP-1 brazing filler metal is particularly suited for resistance brazing applications. This filler metal is somewhat more ductile and less fluid at brazing temperature than other BCuP filler metals containing more phosphorus. Joint clearances of 0.003 to 0.005 in. (0.08 to 0.13 mm) are recommended.

A7.4.2 BCuP-2 and -4 brazing filler metals are very fluid at brazing temperatures and will penetrate joints with small clearances. Best results are obtained with clearances of 0.001 to 0.003 in. (0.03 to 0.08 mm).

A7.4.3 BCuP-3 and -5 brazing filler metals may be used where narrow joint clearances cannot be held. Joint clearances of 0.002 to 0.005 in. (0.06 to 0.13 mm) are recommended.

A7.4.4 BCuP-6 brazing filler metal combines some of the properties of BCuP-2 and BCuP-3. It has the ability to fill wide joint clearances at the lower end of its brazing range. At the high end of the brazing range it is more fluid. Joint clearances of 0.002 to 0.005 in. (0.06 to 0.13 mm) are recommended.

A7.4.5 BCuP-7 brazing filler metal is slightly more fluid than BCuP-3 or -5 and has a lower liquidus temperature. It is used extensively in the form of preplaced rings in heat exchanger and tubing joints. Joint clearances of 0.002 to 0.005 in. (0.06 to 0.13 mm) are recommended.

A7.5 BCu and RBCuZn Classifications (Copper and Copper-Zinc). Brazing filler metals of the BCu and RBCuZn classifications are used for joining various ferrous and nonferrous metals. They can also be used with various brazing processes. However, with the RBCuZn filler metals, overheating should be avoided. Voids may be formed in the joint by entrapped zinc vapors.

A7.5.1 BCu-1 brazing filler metal is used for joining ferrous metals, nickel-base alloys and copper-nickel alloys. It is very free-flowing and is often used in furnace brazing, with a protective atmosphere of partially-combusted natural gas, hydrogen, dissociated ammonia or nitrogen-base atmosphere and generally no flux. On metals that have constituents with difficult-to-reduce oxides (chromium, manganese, silicon, titanium, vanadium, and aluminum) a flux may be required. However, pure dry hydrogen, argon, dissociated ammonia, and vacuum atmospheres are suitable for base metals containing chromium, manganese, or silicon. Flux also may be used with zinc-containing base metals to retard vaporization. Vacuum atmospheres, electrolytic nickel plating, or both, are used for base metals containing titanium and aluminum.

A7.5.2 BCu-1a brazing filler metal is a powder form similar to BCu-1, and its application and use are similar to those of BCu-1.

A7.5.3 BCu-2 brazing filler metal is supplied as a copper-oxide suspension in an organic vehicle. Its applications are similar to BCu-1 and -1a.

A7.5.4 RBCuZn-A[7] brazing filler metal is used on steels, copper, copper alloys, nickel, nickel alloys, and stainless steel where corrosion resistance is not of

[7] RBCuZn-X Filler metals are used for braze welding applications.

importance. It is used with torch, furnace, and induction brazing processes. Fluxing is generally required, and a borax-boric acid flux is commonly used. Joint clearances from 0.002 to 0.005 in. (0.05 to 0.13 mm) are suitable.

A7.5.5 RBCuZn-B (low-fuming brass-nickel) welding rods are similar to RBCuZn-A, but contain additions of iron and manganese which serve to increase the hardness and strength. In addition, a small amount of silicon (0.04-0.15 percent) serves to control the vaporization of the zinc; hence, the "low-fuming" property. The nickel addition (0.2 to 0.8 percent) assures uniform distribution of the iron in the deposit.

This filler metal is used for brazing and braze welding of steel, cast iron, copper, copper alloys, nickel, nickel alloys, and stainless steel. RBCuZn-B filler metal also is used for the surfacing of steel. It is used with torch, induction, and furnace processes. Flux and joint clearances are the same as those specified for RBCuZn-A.

A7.5.6 RBCuZn-C brazing filler metal is used on steels, copper, copper alloys, nickel, nickel alloys, and stainless steel. It is used with the torch, furnace, and induction brazing processes. Fluxing is required, and a borax-boric acid flux is commonly used. Joint clearances from 0.002 to 0.005 in. (0.05 to 0.13 mm) are suitable.

A7.5.7 RBCuZn-D brazing filler metal (called nickel silver) is primarily used for brazing tungsten carbide. It is also used with steel, nickel, and nickel alloys. It can be used with all brazing processes. This filler metal is unsuitable for furnace brazing in a protective atmosphere.

A7.6 BNi Classification (Nickel). Brazing filler metals of the BNi classifications are generally used for their corrosion-resistant and heat-resistant properties. The BNi filler metals have excellent properties at high-service temperatures. They are also satisfactorily used for room-temperature applications and where the service temperatures are equal to the temperature of liquid oxygen, helium, or nitrogen. Best quality can be obtained by brazing in an atmosphere which is reducing to both the base metal and the brazing filler metal.

Narrow joint clearances and postbraze thermal diffusion cycles are often employed to minimize the presence of intermetallic compounds and low-ductility joint conditions. When BNi filler metals are used with the torch, air-atmosphere furnace, and induction brazing processes, a suitable flux must be used. BNi filler metals are particularly suited to vacuum systems and vacuum tube applications because of their low vapor pressure. Chromium is the limiting element in metals to be used in vacuum applications. It should be noted that when phosphorus is combined with some other elements, these compounds have very low vapor pressures and can be readily used in a vacuum brazing atmosphere of 1×10^{-3} Torr (0.13 Pa) at 1950°F (1066°C) without removal of the phosphorus.

Greater strength and ductility in this group of filler metals is obtainable by diffusion brazing.

A7.6.1 BNi-1 filler metal was the first of the nickel filler metals to be developed. The nickel, chromium, and iron contents render it suitable for brazing nickel, chromium or iron base metals. While high carbon content in 300 series stainless steels is usually metallurgically undesirable from a corrosion standpoint, the high carbon in BNi-1 would appear to make it undesirable for brazing stainless steels. The Strauss test for corrosion has been run by one aircraft engine company and did not show any adverse effect of the high-carbon content on the corrosion resistance of joints in base metals such as AISI 347 stainless steels. The reason given for this is that the carbon is already tied up with the chromium in the filler metal.

A7.6.2 The BNi-1a brazing filler metal is a low-carbon grade of BNi-1 with an identical chemical composition, except that while the specified carbon content is 0.06 percent maximum, the carbon content is usually 0.03 percent or lower. While the carbon content is lower, corrosion testing results with the Strauss and Huey test were no better than for joints made with BNi-1. This filler metal produces stronger joints but is less fluid than the BNi-1 filler metal.

A7.6.3 BNi-2 brazing filler metal has a low and narrower melting range and better flow characteristics than BNi-1. These characteristics have made this filler metal the most widely used of the nickel filler metals.

A7.6.4 BNi-3 brazing filler metal is used for applications similar to BNi-1 and BNi-2 and is less sensitive to marginally protective atmospheres.

A7.6.5 BNi-4 brazing filler metal is similar to but more ductile than BNi-3. It is used to form large fillets or joints where fairly large joint clearances are present.

A7.6.6 BNi-5 brazing filler metal is used for applications similar to BNi-1, except that it can be used in certain nuclear applications where boron cannot be tolerated.

A7.6.7 BNi-5a is a modified BNi-5 composition with a reduced silicon content plus a small addition of boron. The presence of boron excludes this alloy from nuclear applications. Otherwise, the applications are similar to those of BNi-5. High-strength joints can

be produced. BNi-5a material can be used in place of BNi-1 filler metal where a reduced level of boron is desired. The brazing of thin-gauge honeycomb to sheet metal base parts is a typical application.

A7.6.8 BNi-6 brazing filler metal is free-flowing and is used in marginally protective atmospheres and for brazing low-chromium steels in exothermic atmospheres.

A7.6.9 BNi-7 brazing filler metal is used for the brazing of honeycomb structures, thin-walled tube assemblies, and other structures which are used at high temperatures. It is recommended for nuclear applications where boron cannot be used. The best results are obtained when it is used in the furnace brazing process. Microstructure and ductility of the joint are improved by increasing time at brazing temperature.

A7.6.10 BNi-8 brazing filler metal is used in honeycomb brazements and on stainless steels and other corrosion-resistant base metals. Since this filler metal contains a high percentage of manganese, special brazing procedures should be observed. As manganese oxidizes more readily than chromium, the hydrogen, argon, and helium brazing atmospheres must be pure and very dry, with a dew point of −70°F (−57°C) or below. The vacuum atmosphere must have low pressure and a low leak rate to insure a very low partial pressure of oxygen. It should be noted that the chemical composition and the melting characteristics of this filler metal will change when the manganese is oxidized or vaporized during brazing in gas or vacuum atmospheres. However, the effect of manganese is not a problem in an atmosphere of proper quality.

A7.6.11 BNi-9 brazing filler metal is a eutectic nickel-chromium-boron filler metal that is particularly well suited for diffusion brazing applications. Boron has a small molecular diameter, thus it diffuses rapidly out of the brazed joint, leaving the nickel-chromium alloy in the joint along with elements that diffuse from the base metal into the joint, such as aluminum, titanium, etc. Depending on the diffusion time and temperature, the joint remelt temperature can be above 2500°F (1371°C) and, depending on the base metal, the hardness can be as low as HRB70. With further diffusion time, the grains can grow across the joint, and it may appear as all base metal. The single solidus and liquidus temperature (eutectic) eliminates the possibility of liquation and thus helps in brazing thick sections that require slower heating.

A7.6.12 BNi-10 brazing filler metal is a high-strength material for high-temperature applications. The tungsten is a matrix strengthener which makes it useful for brazing base metals containing cobalt, molybdenum, and tungsten. This filler metal has a wide melting range and has been used for brazing cracks in .020 in. (0.5 mm) thick combustion chambers. It results in a layer of filler metal across the joint which acts as a doubler while the lower melting constituent is fluid enough to flow through the thin crack and produce a suitable brazement.

A7.6.13 BNi-11 brazing filler metal is a strong material for high-temperature brazement applications. The tungsten matrix hardener makes it suitable for brazing base metals containing cobalt, molybdenum, and tungsten. With its wider melting range, it is suitable for slightly higher than normal brazing clearances.

A7.7 BCo Classification (Cobalt). Brazing filler metals of the BCo-1 classification are generally used for their high-temperature properties and their compatibility with cobalt alloys.

A7.8 BMg Classification (Magnesium). Brazing filler metal BMg-1 is used for joining AZ10A, K1A, and M1A magnesium alloys.

A7.9 Filler Metals for Vacuum Service. These brazing filler metals are specially controlled to fabricate high quality electronic devices where the service life and operating characteristics are of prime importance. Brazing filler metals for vacuum service should be used in a high-purity protective atmosphere in order to maintain the purity of the filler metal and to assure proper brazing and final brazement quality. It is very important in some applications that the brazing filler metal not spatter onto areas near the joint area. For this reason, this specification includes spatter test requirements, described in Section 11, Spatter Test, for the vacuum grade classifications.

In addition to these special grades, BCo-1 and all BNi brazing filler metals, except BNi-8, are suitable for vacuum service.

A8. Discontinued Classifications

A number of filler metal classifications have been discontinued during the numerous revisions of this specification, reflecting changes in commercial practice over the past 40 years. These discontinued filler metal classifications are listed in Table A2, along with the date they were last published.

TABLE A2
DISCONTINUED BRAZING FILLER METAL CLASSIFICATIONS

AWS Classification	Last A5.8 Publication Date
RBCuZn-1	1952
RBCuZn-2	1952
RBCuZn-3	1952
RBCuZn-4	1952
RBCuZn-5	1952
RBCuZn-6	1952
RBCuZn-7	1952
BAgMn	1956
BAlSi-1	1956
BNiCr	1956
BCuAu-1	1956
BCuAu-2	1956
BAg-11	1962
BMg2	1962
BMg2a	1976
BAlSi-6	1981
BAlSi-8	1981
BAlSi-10	1981
BAg-25	1981
RBCuZn-E	1981
RBCuZn-F	1981
RBCuZn-G	1981
RBCuZn-H	1981
BAg-12, BAg-14, BAg-15, BAg-16, BAg-17	The Committee chose not to use these numbers as they improperly appeared in another publication.

SPECIFICATION FOR BARE STAINLESS STEEL WELDING ELECTRODES AND RODS

SFA-5.9

(Identical with AWS Specification A5.9-93)

1. Scope

This specification prescribes requirements for the classification of bare stainless steel wire, strip, composite metal cored, and stranded welding electrodes and rods. The chromium content of these filler metals is not less than 10.5 percent and the iron content exceeds that of any other element.[1] For purposes of classification, the iron content shall be derived as the balance element when all other elements are considered to be at their minimum specified values.

PART A — GENERAL REQUIREMENTS

2. Classification

2.1 The welding materials covered by this specification are classified according to chemical composition (see Table 1).

2.2 Materials may be classified under more than one classification provided they meet all the requirements of those classifications as specified in Table 1.

3. Acceptance

Acceptance[2] of the material shall be in accordance with the provisions of ANSI/AWS A5.01, *Filler Metal Procurement Guidelines*.[3]

4. Certification

By affixing the AWS specification and classification designations to the packaging, or the classification to the product, the manufacturer certifies that the product meets the requirements of this specification.[4]

5. Units of Measure and Rounding-Off Procedure

5.1 U.S. customary units are the standard units of measure in this specification. The SI units are given as equivalent values to the U.S. customary units. The standard sizes and dimensions in the two systems are not identical and, for this reason, conversion from a standard size or dimension in one system will not always coincide with a standard size or dimension in the other. Suitable conversions, encompassing standard sizes of both can be made, however, if appropriate tolerances are applied in each case.

5.2 For the purpose of determining conformance with this specification, an observed or calculated value shall be rounded to the "nearest unit" in the last right-hand place of figures used in expressing the limiting value in accordance with the rounding-off method given in ASTM E29, *Standard Practice for Using Significant Digits in Test Data to Determine Conformance with Specifications*.[5]

[1] This revision still contains information on ER502, ER505, EC502, and EC505 classifications. These classifications also will be included in the next revision of ANSI/AWS A5.28, *Specification for Low Alloy Steel Electrodes for Gas Metal Arc Welding*. These four classifications will be deleted from the first revision of ANSI/AWS A5.9 following the publication of the revised ANSI/AWS A5.28 specification.

[2] See A3, Acceptance (in the Appendix) for further information concerning acceptance, testing of the material shipped, and ANSI/AWS A5.01, *Filler Metal Procurement Guidelines*.

[3] AWS standards can be obtained from the American Welding Society, 550 N.W. LeJeune Road, P.O. Box 351040, Miami, Florida 33135.

[4] See A4, Certification (in the Appendix) for further information concerning certification and the testing called for to meet this requirement.

[5] ASTM standards can be obtained from the American Society for Testing and Materials, 100 Barr Harbor Drive, West Conshohocken, PA 19428-2959.

TABLE 1
CHEMICAL COMPOSITION REQUIREMENTS

AWS Classification[c,d]	UNS Number[e]	Composition, Wt %[a,b]										Other Elements	
		C	Cr	Ni	Mo	Mn	Si	P	S	N	Cu	Element	Amount
ER209	S20980	0.05	20.5–24.0	9.5–12.0	1.5–3.0	4.0–7.0	0.90	0.03	0.03	0.10–0.30	0.75	V	0.10–0.30
ER218	S21880	0.10	16.0–18.0	8.0–9.0	0.75	7.0–9.0	3.4–4.5	0.03	0.03	0.08–0.18	0.75	—	—
ER219	S21980	0.05	19.0–21.5	5.5–7.0	0.75	8.0–10.0	1.00	0.03	0.03	0.10–0.30	0.75	—	—
ER240	S24080	0.05	17.0–19.0	4.0–6.0	0.75	10.5–13.5	1.00	0.03	0.03	0.10–0.30	0.75	—	—
ER307	S30780	0.04–0.14	19.5–22.0	8.0–10.7	0.5–1.5	3.3–4.75	0.30–0.65	0.03	0.03	—	0.75	—	—
ER308	S30880	0.08	19.5–22.0	9.0–11.0	0.75	1.0–2.5	0.30–0.65	0.03	0.03	—	0.75	—	—
ER308H	S30880	0.04–0.08	19.5–22.0	9.0–11.0	0.50	1.0–2.5	0.30–0.65	0.03	0.03	—	0.75	—	—
ER308L	S30883	0.03	19.5–22.0	9.0–11.0	0.75	1.0–2.5	0.30–0.65	0.03	0.03	—	0.75	—	—
ER308Mo	S30882	0.08	18.0–21.0	9.0–12.0	2.0–3.0	1.0–2.5	0.30–0.65	0.03	0.03	—	0.75	—	—
ER30LMo	S30886	0.04	18.0–21.0	9.0–12.0	2.0–3.0	1.0–2.5	0.30–0.65	0.03	0.03	—	0.75	—	—
ER308Si	S30881	0.08	19.5–22.0	9.0–11.0	0.75	1.0–2.5	0.65–1.00	0.03	0.03	—	0.75	—	—
ER308LSi	S30888	0.03	19.5–22.0	9.0–11.0	0.75	1.0–2.5	0.65–1.00	0.03	0.03	—	0.75	—	—
ER309	S30980	0.12	23.0–25.0	12.0–14.0	0.75	1.0–2.5	0.30–0.65	0.03	0.03	—	0.75	—	—
ER309L	S30983	0.03	23.0–25.0	12.0–14.0	0.75	1.0–2.5	0.30–0.65	0.03	0.03	—	0.75	—	—
ER309Mo	S30982	0.12	23.0–25.0	12.0–14.0	2.0–3.0	1.0–2.5	0.30–0.65	0.03	0.03	—	0.75	—	—
ER309LMo	S30986	0.03	23.0–25.0	12.0–14.0	2.0–3.0	1.0–2.5	0.30–0.65	0.03	0.03	—	0.75	—	—
ER309Si	S30981	0.12	23.0–25.0	12.0–14.0	0.75	1.0–2.5	0.65–1.00	0.03	0.03	—	0.75	—	—
ER309LSi	S30988	0.03	23.0–25.0	12.0–14.0	0.75	1.0–2.5	0.65–1.00	0.03	0.03	—	0.75	—	—
ER310	S31080	0.08–0.15	25.0–28.0	20.0–22.5	0.75	1.0–2.5	0.30–0.65	0.03	0.03	—	0.75	—	—
ER312	S31380	0.15	28.0–32.0	8.0–10.5	0.75	1.0–2.5	0.30–0.65	0.03	0.03	—	0.75	—	—
ER316	S31680	0.08	18.0–20.0	11.0–14.0	2.0–3.0	1.0–2.5	0.30–0.65	0.03	0.03	—	0.75	—	—
ER316H	S31680	0.04–0.08	18.0–20.0	11.0–14.0	2.0–3.0	1.0–2.5	0.30–0.65	0.03	0.03	—	0.75	—	—
ER316L	S31683	0.03	18.0–20.0	11.0–14.0	2.0–3.0	1.0–2.5	0.30–0.65	0.03	0.03	—	0.75	—	—
ER316Si	S31681	0.08	18.0–20.0	11.0–14.0	2.0–3.0	1.0–2.5	0.65–1.00	0.03	0.03	—	0.75	—	—
ER316LSi	S31688	0.03	18.0–20.0	11.0–14.0	2.0–3.0	1.0–2.5	0.65–1.00	0.03	0.03	—	0.75	—	—
ER317	S31780	0.08	18.5–20.5	13.0–15.0	3.0–4.0	1.0–2.5	0.30–0.65	0.03	0.03	—	0.75	—	—
ER317L	S31783	0.03	18.5–20.5	13.0–15.0	3.0–4.0	1.0–2.5	0.30–0.65	0.03	0.03	—	0.75	—	—
ER318	S31980	0.08	18.0–20.0	11.0–14.0	2.0–3.0	1.0–2.5	0.30–0.65	0.03	0.03	—	0.75	Cb[g]	8 ‡ C min/1.0 max
ER320	N08021	0.07	19.0–21.0	32.0–36.0	2.0–3.0	2.5	0.60	0.03	0.03	—	3.0–4.0	Cb[g]	8 ‡ C min/1.0 max
E320LR	N08022	0.025	19.0–21.0	32.0–36.0	2.0–3.0	1.5–2.0	0.15	0.015	0.02	—	3.0–4.0	Cb[g]	8 ‡ C min/0.40 max
ER321	S32180	0.08	18.5–20.5	9.0–10.5	0.75	1.0–2.5	0.30–0.65	0.03	0.03	—	0.75	Ti	9 ‡ C min/1.0 max
ER330	N08331	0.18–0.25	15.0–17.0	34.0–37.0	0.75	1.0–2.5	0.30–0.65	0.03	0.03	—	0.75	—	—
ER347	S34780	0.08	19.0–21.5	9.0–11.0	0.75	1.0–2.5	0.30–0.65	0.03	0.03	—	0.75	Cb[g]	10 ‡ C min/1.0 max
ER347Si	S34788	0.08	19.0–21.5	9.0–11.0	0.75	1.0–2.5	0.65–1.00	0.03	0.03	—	0.75	Cb[g]	10 ‡ C min/1.0 max
ER383	N08028	0.025	26.5–28.5	30.0–33.0	3.2–4.2	1.0–2.5	0.50	0.02	0.03	—	0.70–1.5	—	—
ER385	N08904	0.025	19.5–21.5	24.0–26.0	4.2–5.2	1.0–2.5	0.50	0.02	0.03	—	1.2–2.0	—	—
ER409	S40900	0.08	10.5–13.5	0.6	0.50	0.8	0.8	0.03	0.03	—	0.75	Ti	10 ‡ C min/1.5 max
ER409Cb	S40940	0.08	10.5–13.5	0.6	0.50	0.8	1.0	0.04	0.03	—	0.75	Cb[g]	10 ‡ C min/0.75 max
ER410	S41080	0.12	11.5–13.5	0.6	0.75	0.6	0.5	0.03	0.03	—	0.75	—	—
ER410NiMo	S41086	0.06	11.0–12.5	4.0–5.0	0.4–0.7	0.6	0.5	0.03	0.03	—	0.75	—	—

(Continued)

TABLE 1 (CONT'D)
CHEMICAL COMPOSITION REQUIREMENTS

AWS Classification[c,d]	UNS Number[e]	Composition, Wt %[a,b]										Other Elements	
		C	Cr	Ni	Mo	Mn	Si	P	S	N	Cu	Element	Amount
ER420	S42080	0.25–0.40	12.0–14.0	0.6	0.75	0.6	0.5	0.03	0.03	—	0.75	—	—
ER430	S43080	0.10	15.5–17.0	0.6	0.75	0.6	0.5	0.03	0.03	—	0.75	—	—
ER446LMo	S44687	0.015	25.0–27.5	f	0.75–1.50	0.4	0.4	0.02	0.02	0.015	f	—	—
ER502[h]	S50280	0.10	4.6–6.0	0.6	0.45–0.65	0.6	0.5	0.03	0.03	—	0.75	—	—
ER505[h]	S50480	0.10	8.0–10.5	0.5	0.8–1.2	0.6	0.5	0.03	0.03	—	0.75	—	—
ER630	S17480	0.05	16.0–16.75	4.5–5.0	0.75	0.25–0.75	0.75	0.03	0.03	—	3.25–4.00	Cb[g]	0.15–0.30
ER19–10H	S30480	0.04–0.08	18.5–20.0	9.0–11.0	0.25	1.0–2.0	0.30–0.65	0.03	0.03	—	0.75	Cb[g]	0.05
												Ti	0.05
ER16-8-2	S16880	0.10	14.5–16.5	7.5–9.5	1.0–2.0	1.0–2.0	0.30–0.65	0.03	0.03	—	0.75	—	—
ER2209	S39209	0.03	21.5–23.5	7.5–9.5	2.5–3.5	0.50–2.0	0.90	0.03	0.03	0.08–0.20	0.75	—	—
ER2553	S39553	0.04	24.0–27.0	4.5–6.5	2.9–3.9	1.5	1.0	0.04	0.03	0.10–0.25	1.5–2.5	—	—
ER3556	R30556	0.05–0.15	21.0–23.0	19.0–22.5	2.5–4.0	0.50–2.00	0.20–0.80	0.04	0.015	0.10–0.30	—	Co	16.0–21.0
												W	2.0–3.5
												Cb	0.30
												Ta	0.30–1.25
												Al	0.10–0.50
												Zr	0.001–0.10
												La	0.005–0.10
												B	0.02

NOTES:

a. Analysis shall be made for the elements for which specific values are shown in this table. If the presence of other elements is indicated in the course of this work, the amount of those elements shall be determined to ensure that their total, excluding iron, does not exceed 0.50 percent.

b. Single values shown are maximum percentages.

c. In the designator for composite, stranded, and strip electrodes, the "R" shall be deleted. A designator "C" shall be used for composite and stranded electrodes and a designator "Q" shall be used for strip electrodes. For example, ERXXX designates a solid wire and EQXXX designates a strip electrode of the same general analysis, and the same UNS number. However, ECXXX designates a composite metal cored or stranded electrode and may not have the same UNS number. Consult ASTM/SAE Uniform Numbering System for the proper UNS Number.

d. For special applications, electrodes and rods may be purchased with less than the specified silicon content.

e. ASTM/SAE Unified Numbering System for Metals and Alloys.

f. Nickel + copper equals 0.5 percent maximum.

g. Cb(Nb) may be reported as Cb(Nb) + Ta.

h. These classifications also will be included in the next revision of ANSI/AWS A5.28, *Specification for Low Alloy Steel Filler Metals for Gas Shielded Metal Arc Welding.* They will be deleted from ANSI/AWS A5.9 in the first revision following publication of the revised ANSI/AWS A5.28 document.

PART B — TESTS, PROCEDURES, AND REQUIREMENTS

6. Summary of Tests

6.1 Chemical analysis of the solid electrode, rod, or strip is the only test required for classification of the product forms under this specification.

6.2 Chemical analysis of a fused sample of composite or stranded electrode or rod is the only test required for classification of these product forms under this specification.

7. Retest

If the results of the test fail to meet the requirement, the test shall be repeated twice. The results of both retests shall meet the requirement. Material for retest may be taken from the original sample or from a new sample, provided the material is from the same heat or lot. For chemical analysis, retest need be only for those specific elements which failed to meet the test requirement.

8. Chemical Analysis

8.1 A sample of the filler metal or a fused sample shall be prepared for analysis (for example, see Section A5, Preparation of Samples for Chemical Analysis).

8.2 The sample shall be analyzed by acceptable analytical methods capable of determining whether the composition meets the requirements of this specification. In case of dispute, the referee method shall be ASTM Standard Method E353, *Chemical Analysis of Stainless, Heat Resisting, Maraging, and Other Similar Chromium-Nickel-Iron Alloys.*

8.3 The results of the analysis shall meet the requirements of Table 1 for the classification of the filler metal under test.

PART C — MANUFACTURE, IDENTIFICATION, AND PACKAGING

9. Method of Manufacture

The welding rods, strip, and electrodes classified according to this specification may be manufactured by any method that will produce material that meets the requirements of this specification.

10. Standard Sizes and Shapes

10.1 Standard sizes of filler metal (except strip electrodes) in the different package forms (straight lengths, coils with support, coils without support, and spools) shall be as shown in Table 2.

10.2 Standard sizes for strip electrodes in coils shall be as shown in Table 3.

11. Finish and Uniformity

11.1 All filler metal shall have a smooth finish that is free from slivers, depressions, scratches, scale, seams, laps (exclusive of the longitudinal joint in metal cored filler metal) and foreign matter that would adversely affect the welding characteristics, the operation of the welding equipment, or the properties of the weld metal.

11.2 Each continuous length of filler metal shall be from a single heat or lot of material and welds, when present, shall have been made so as not to interfere with the uniform, uninterrupted feeding of the filler metal on automatic and semiautomatic equipment.

11.3 Core ingredients in metal cored filler metal shall be distributed with sufficient uniformity throughout the length of the electrode so as not to adversely affect the performance of the electrode or the properties of the weld metal.

11.4 The slit edges of strip electrodes shall be free from burrs exceeding five percent of the strip thickness.

12. Standard Package Forms

12.1 Standard package forms are straight lengths, coils with support, coils without support, and spools. Standard package dimensions and weights for each form are shown in Table 4.

12.2 Package forms, sizes, and weights other than those shown in Table 4 shall be as agreed between purchaser and supplier.

12.3 The liners in coils with support shall be designed and constructed to prevent distortion of the coil during normal handling and use, and shall be clean and dry enough to maintain the cleanliness of the filler metal.

12.4 Spools shall be designed and constructed to prevent distortion of the filler metal during normal

TABLE 2
STANDARD WIRE SIZES OF ELECTRODES AND RODS[a]

Form	Diameter			Tolerance			
				Solid		Composite	
	in.		mm	in.	mm	in.	mm
Welding rods in straight lengths[b]	0.045		1.1	±0.001	±0.03	±0.002	±0.05
	1/16	(0.063)	1.6	±0.002	±0.05	±0.003	±0.05
	5/64	(0.078)	2.0				
	3/32	(0.094)	2.4				
	1/8	(0.125)	3.2				
	5/32	(0.156)	4.0				
	3/16	(0.187)	4.8				
Filler metals in coils with or without support	0.045		1.1	±0.001	±0.03	±0.002	±0.05
	1/16	(0.063)	1.6	±0.002	±0.05	±0.002	±0.08
	5/64	(0.078)	2.0				
	3/32	(0.094)	2.4				
	7/64	(0.109)	2.8				
	1/8	(0.125)	3.2				
	5/32	(0.156)	4.0				
	3/16	(0.187)	4.8				
	1/4	(0.250)	6.4				
Filler metal wound on 8 or 12 in. (200 or 300 mm) O.D. spools	0.030		0.8	±0.001	±0.03	±0.002	±0.05
	0.035		0.9				
	0.045		1.1				
	1/16	(0.063)	1.6	±0.002	±0.05	±0.003	±0.08
	5/64	(0.078)	2.0				
	3/32	(0.094)	2.4				
	7/64	(0.109)	2.8				
Filler metal wound on 4 in. (100 mm) O.D. spools	0.020		0.5	±0.001	±0.03	±0.002	±0.05
	0.025		0.6				
	0.030		0.8				
	0.035		0.9				
	0.045		1.1				

NOTES:
a. Dimension, tolerances, and package forms other than those shown shall be as agreed upon between purchaser and supplier.
b. Length shall be 36 in. +0,−1/2 in. (900 mm + 15,−0 mm).

handling and use and shall be clean and dry enough to maintain the cleanliness of the filler metal (see Figures 1 and 2).

12.5 Net weights shall be within ±10 percent of the nominal weight.

13. Winding Requirements

13.1 The filler metal shall be wound so that kinks, waves, sharp bends, or wedging are not encountered, leaving the filler metal free to unwind without restriction. The outside end of the filler metal (the end with which welding is to begin) shall be identified so it can be readily located and shall be fastened to avoid unwinding.

13.2 The cast and helix of all filler metal in coils and spools shall be such that the filler metal will feed in an uninterrupted manner in automatic and semiautomatic equipment.

13.3 The cast and helix of drawn, solid filler metal on 4 in. (100 mm) spools shall be such that a specimen

TABLE 3
STANDARD SIZES OF STRIP ELECTRODES[a,b]

Width		Thickness	
in.	mm	in.	mm
1.18	30	0.020	0.5
2.36	60	0.020	0.5
3.54	90	0.020	0.5
4.72	120	0.020	0.5

NOTES:
a. Other sizes shall be as agreed upon between purchaser and supplier.
b. Strip electrodes shall not vary more than ±0.008 in. (±0.20 mm) in width and more than ±0.002 in. (±0.05 mm) in thickness.

long enough to produce a single loop, when cut from the spool and laid unrestrained on a flat surface, will do the following:

(1) Form a circle not less than 2.5 in. (65 mm) nor more than 15 in. (380 mm) in diameter

(2) Rise above the flat surface no more than $^1/_2$ in. (13 mm) at any location

13.4 The cast and helix of drawn solid filler metal on 8 in. (200 mm) spools shall be such that a specimen long enough to produce a single loop, when cut from the spool and laid unrestrained on a flat surface, will do the following:

(1) Form a circle not less than 8 in. (200 mm) nor more than 50 in. (1.3 m) in diameter

(2) Rise above the flat surface no more than 1 in. (25 mm) at any location

13.5 The cast and helix of drawn, solid filler metal on 12 in. and 14 in. (300 and 350 mm) spools shall be such that a specimen long enough to produce a single loop, when cut from the spool and laid unrestrained on a flat surface, will do the following:

(1) Form a circle not less than 15 in. (380 mm) in diameter and not more than 50 in. (1.3 m) in diameter

(2) Rise above the flat surface no more than 1 in. (25 mm) at any location

13.6 The edge of the strip electrodes (camber) shall not deviate from a straight line by more than 0.5 in. (12.5 mm) in any 8 ft. (2.5 m) in length.

14. Filler Metal Identification

14.1 The product information and the precautionary information required in Section 16, Marking of Packages, shall also appear on each coil and each spool.

14.2 Coils without support shall have a tag containing this information securely attached to the inside end of the coil.

TABLE 4
STANDARD PACKAGE DIMENSIONS AND WEIGHTS[a]

	Spool or Coil Diameter[b]		Strip Width[b]		Nominal Weight	
Product Form	in.	mm	in.	mm	lbs	kg
Welding Rods in Straight Lengths	NA	NA	NA	NA	10, 50	4.5, 23
Spools	4	100	NA	NA	1-½, 2-½	0.7, 1.1
	8	200	NA	NA	10	4.5
	12	300	NA	NA	25	11.4
	14	350	NA	NA	50	22.8
Coil with Support[c]	12	300	NA	NA	25, 50, 60	11, 23, 27
Strip Electrode	12	300	1.18	30	60	27.5
	12	300	2.36	60	60	27.5
	12	300	3.54	90	120	55
	12	300	4.72	120	120	55

NOTES:
a. Net weights shall be within ±10% of the nominal weight.
b. NA is "not applicable."
c. Weight of coils without support shall be as specified by the purchaser.

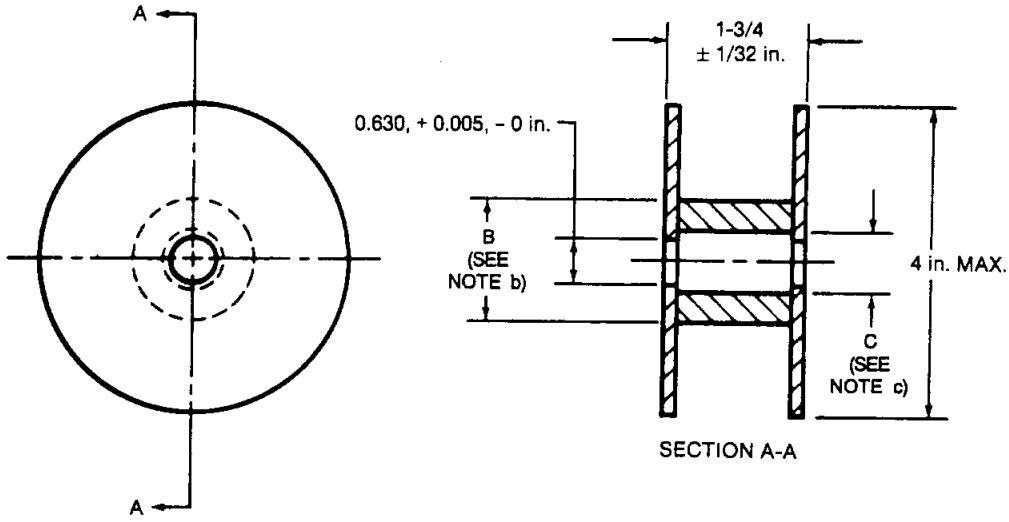

SI EQUIVALENTS	
in.	mm
0.005	0.13
1/32	0.8
0.630	16
1-3/4	45
4	102

Notes:
a. All dimensions are in inches.
b. Dimension B, outside diameter of barrel, shall be such as to permit proper feeding of the filler metals.
c. Dimension C, inside diameter of barrel, shall be such that swelling of the barrel or misalignment of the barrel and flanges will not result in the inside diameter of the barrel being less than the inside diameter of the flanges.

FIG. 1 STANDARD 4 IN. (100 MM) DIAMETER SPOOL DIMENSIONS

14.3 Coils with support shall have the information securely affixed in a prominent location on the support.

14.4 Spools shall have the information securely affixed in a prominent location on the outside of one flange of the spool.

14.5 Identification of each straight length welding rod is not required by this specification but may be done as agreed upon between the purchaser and supplier.

15. Packaging

Filler metal shall be suitably packaged to ensure against damage during shipment and storage under normal conditions.

16. Marking of Packages

16.1 The following product information (as a minimum) shall be legibly marked so as to be visible from the outside of each unit package:

(1) AWS specification and classification number (year of issue maybe excluded)

(2) Supplier's name and trade designation

(3) Size and net weight

(4) Lot, control, or heat number

16.2 The following precautionary information (as a minimum) shall be prominently displayed in legible print on all packages of welding material, including individual unit packages enclosed within a larger package:

WARNING

Protect yourself and others. Read and understand this information.

FUMES AND GASES can be dangerous to your health.

ARC RAYS can injure eyes and burn skin.

ELECTRIC SHOCK can kill.

- Before use, read and understand the manufacturer's instructions, Material Safety Data Sheets (MSDSs), and your employer's safety practices.
- Keep your head out of the fumes.
- Use enough ventilation, exhaust at the arc, or both, to keep fumes and gases away from your breathing zone and the general area.
- Wear correct eye, ear, and body protection.
- Do not touch live electrical parts.

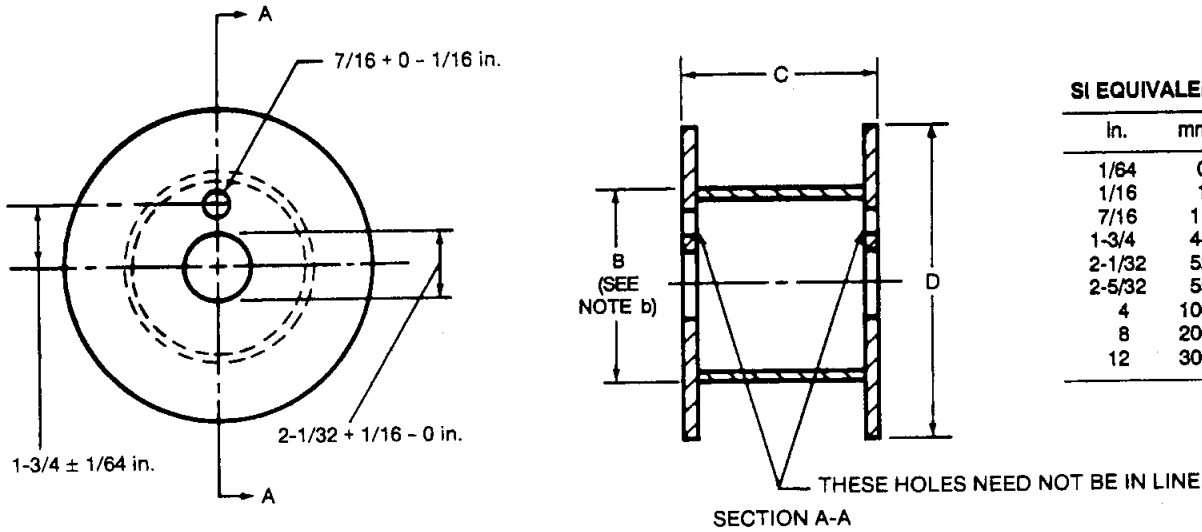

SI EQUIVALENTS

In.	mm
1/64	0.4
1/16	1.6
7/16	11
1-3/4	44
2-1/32	52
2-5/32	55
4	100
8	200
12	300

Dimensions, in.		
Spool size	C	D, maximum
8	2-5/32 ± 1/32	8
12	4 ± 1/16	12

Notes:
a. All dimensions are in inches.
b. Dimension B, outside diameter of barrel, shall be such as to permit proper feeding of the filler metals.

FIG. 2 STANDARD 8 AND 12 IN. (200 AND 300 MM) DIAMETER SPOOL DIMENSIONS

• See American National Standard Z49.1, *Safety in Welding and Cutting*, published by the American Welding Society, 550 N.W. LeJeune Road, P.O. Box 351040, Miami, Florida 33135; OSHA Safety and Health Standards, *29 CFR 1910*, available from the U.S. Government Printing Office, Washington, D.C. 20402.

DO NOT REMOVE THIS INFORMATION

Appendix
Guide to Specification for Bare Stainless Steel Welding Electrodes and Rods

(This Appendix is not a part of ANSI/AWS A5.9-93, *Specification for Bare Stainless Steel Welding Electrodes and Rods,* but is included for information purposes only.)

A1. Introduction

A1.1 This guide is intended to provide both the supplier and the purchaser of bare stainless steel welding electrodes and welding rods of the types covered by this specification with a means of production control and a basis of acceptance through mutually acceptable, sound, standard requirements.

A1.2 This guide has been prepared as an aid to prospective users of the bare stainless steel welding electrodes and welding rods of the types covered by the specification in determining the classification best suited for a particular application, with due consideration to the requirements for that application.

A1.3 For definitions of bare electrodes, composite metal cored electrodes, and composite stranded electrodes, see "electrode" in ANSI/AWS A3.0, *Standard Welding Terms and Definitions.* For purposes of this specification, composite metal cored rods are defined by composite metal cored electrodes and composite stranded rods are defined by composite stranded electrodes, except for the basic differences between welding electrode and welding rod as defined by ANSI/AWS A3.0.

A1.4 In some cases, the composition of bare filler metal classified in this specification may differ from that of core wire used for the corresponding classification of covered electrodes classified in ANSI/AWS A5.4, *Specification for Covered Stainless Steel Electrodes for Shielded Metal Arc Welding.* Caution, therefore, should be exercised regarding the use of core wire from a covered electrode as bare filler metal.

A2. Classification System

A2.1 The chemical composition of the filler metal is identified by a series of numbers and, in some cases, chemical symbols, the letters L, H, and LR, or both. Chemical symbols are used to designate modifications of basic alloy types, e.g., ER308Mo. The letter "H" denotes carbon content restricted to the upper part of the range that is specified for the standard grade of the specific filler metal. The letter "L" denotes carbon content in the lower part of the range that is specified for the corresponding standard grade of filler metal. The letters "LR" denote low residuals (see A8.30).

A2.1.1 The first two designators may be "ER" for solid wires that may be used as electrodes or rods; or they may be "EC" for composite cored or stranded wires; or they may be "EQ" for strip electrodes.

A2.1.2 The three digit number such as 308 in ER308 designates the chemical composition of the filler metal.

A3. Acceptance

Acceptance of all welding materials classified under this specification is in accordance with ANSI/AWS A5.01, *Filler Metal Procurement Guidelines,* as the specification states. Any testing a purchaser requires of the supplier, for material shipped in accordance with this specification, shall be clearly stated in the purchase order, according to the provisions of ANSI/AWS A5.01. In the absence of any such statement in the purchase order, the supplier may ship the material with whatever testing the supplier normally conducts on material of that classification, as specified in Schedule F, Table 1, of the ANSI/AWS A5.01. Testing in accordance with

any other schedule in that table shall be specifically required by the purchase order. In such cases, acceptance of the material shipped shall be in accordance with those requirements.

A4. Certification

The act of placing the AWS specification and classification designations on the packaging enclosing the product, or the classification on the product itself, constitutes the supplier's (manufacturer's) certification that the product meets all of the requirements of the specification.

The only testing requirement implicit in this certification is that the manufacturer has actually conducted the tests required by the specification on material that is representative of that being shipped and that the material met the requirements of the specification. Representative material, in this case, is any production run of that classification using the same formulation. "Certification" is not to be construed to mean that tests of any kind were necessarily conducted on samples of the specific material shipped. Tests on such material may or may not have been made. The basis for the certification required by the specification is the classification test of "representative material" cited above, and the "Manufacturer's Quality Assurance System" in ANSI/AWS A5.01.

A5. Preparation of Samples for Chemical Analysis

A5.1 Solid Bare Electrodes and Rod. Preparation of a chemical analysis sample from solid, bare welding electrodes and rods presents no technical difficulties. Such filler metal may be subdivided for analysis by any convenient method with all samples or chips representative of the lot of filler metal.

A5.2 Composite Metal Cored or Stranded Electrodes

A5.2.1 Gas tungsten arc welding with argon gas shielding may be used to melt a button (or slug) of sufficient size for analytical use.

A5.2.2 Gas metal arc welding with argon gas shielding also may be used to produce a homogeneous deposit for analysis. In this case, the weld pad is similar to that used to prepare a sample of filler metal deposited by covered electrodes.

A5.2.3 Both processes must be utilized in such a manner that no dilution of the base metal or mold occurs to contaminate the fused sample. Copper molds often are used to minimize the effects of dilution by the base metal or mold.

A5.2.4 Special care must be exercised to minimize such dilution effects when testing low carbon filler metals.

A5.3 Preparation of a fused sample by gas tungsten arc welding using argon shielding gas will transfer essentially all of the components through the arc. Some slight loss in carbon may occur, but such loss will never be greater than would be encountered in an actual welding operation, regardless of process (see A7.9.1). Nonmetallic ingredients, when present in the core, will form a slag on top of the deposit which must be removed and discarded.

A5.4 The sample of fused filler metal must be large enough to provide the amount of undiluted material required by the chemist for analysis. No size or shape of deposited pads has been specified because these are immaterial if the deposit is truly undiluted.

A5.5 A sample made using the composite-type filler metal which has been fused in a copper mold should be undiluted since there will be essentially no admixture with base metal.

A5.6 Assurance that an undiluted sample is being obtained from the chosen size of pad at the selected distance above the base metal can be obtained by analyzing chips removed from successively lower layers of the pad. Layers which are undiluted will all have the same chemical composition. Therefore, the determination of identical compositions for two successive layers of deposited filler metal will provide evidence that the last layer is undiluted. Layers diluted by mild steel base metal will be low in chromium and nickel. Particular attention should be given to carbon when analyzing Type 308L, 308LSi, 308LMo, 309L, 309LSi, 309LMo, 316L, 316LSi, 317L, 320LR, 383, 385, 446LMo, 2209, or 2553 weld metal deposited using either solid or metal cored electrodes or rods. Because of carbon pick-up, the undiluted layers in a pad built on high-carbon base metal begin a considerable distance above the base.

A6. Ventilation During Welding

A6.1 Five major factors govern the quantity of fumes to which welders and welding operators can be exposed during welding:

(1) Dimensions of the space in which welding is done (with special regard to the height of the ceiling)

(2) Number of welders and welding operators working in the space

(3) Rate of evolution of fumes, gases, or dust, according to the materials and processes involved

(4) The proximity of the welders or welding operators to the fumes as they issue from the welding zone, and to the gases and dusts in the space in which they are working

(5) The ventilation provided to the space in which the welding is done

A6.2 American National Standard Z49.1, *Safety in Welding and Cutting* (published by the American Welding Society), discusses the ventilation that is required during welding and should be referred to for details. Attention is particularly drawn to the section of that document related to Health Protection and Ventilation.

A7. Ferrite in Weld Deposits

A7.1 Ferrite is known to be very beneficial in reducing the tendency for cracking or fissuring in weld metals; however, it is not essential. Millions of pounds of fully austenitic weld metal have been used for years and provided satisfactory service performance. Generally, ferrite is helpful when the welds are restrained, the joints are large, and when cracks or fissures adversely affect service performance. Ferrite increases the weld strength level. Ferrite may have a detrimental effect on corrosion resistance in some environments. It also is generally regarded as detrimental to toughness in cryogenic service, and in high-temperature service where it can transform into the brittle sigma phase.

A7.2 Ferrite can be measured on a relative scale by means of various magnetic instruments. However, work by the Subcommittee for Welding of Stainless Steel of the High Alloys Committee of the Welding Research Council (WRC) established that the lack of a standard calibration procedure resulted in a very wide spread of readings on a given specimen when measured by different laboratories. A specimen averaging 5.0 percent ferrite based on the data collected from all the laboratories was measured as low as 3.5 percent by some and as high as 8.0 percent by others. At an average of 10 percent, the spread was 7.0 to 16.0 percent. In order to substantially reduce this problem, the WRC Subcommittee published on July 1, 1972, *A Calibration Procedure for Instruments to Measure the Delta Ferrite Content of Austenitic Stainless Steel Weld Metal.*[6] In 1974, the AWS extended this procedure and prepared AWS A4.2, *Standard Procedures for Calibrating Magnetic Instruments to Measure the Delta Ferrite Content of Austenitic Stainless Steel Weld Metal.* All instruments used to measure the ferrite content of AWS classified stainless electrode products were to be traceable to this AWS standard.

A7.3 The WRC Subcommittee also adopted the term *Ferrite Number* (FN) to be used in place of percent ferrite, to clearly indicate that the measuring instrument was calibrated to the WRC procedure. The Ferrite Number, up to 10 FN, is to be considered equal to the "percent ferrite" term previously used. It represents a good average of commercial U.S. and world practice on the "percent ferrite". Through the use of standard calibration procedures, differences in readings due to instrument calibration are expected to be reduced to about ±5 percent, or at the most, ±10 percent of the measured ferrite value.

A7.4 In the opinion of the WRC Subcommittee, it has been impossible, to date, to accurately determine the true absolute ferrite content of weld metals.

A7.5 Even on undiluted pads, ferrite variations from pad to pad must be expected due to slight changes in welding and measuring variables. On a large group of pads from one heat or lot and using a standard pad welding and preparation procedure plus or minus two sigma values indicate that 95 percent of the tests are expected to be within a range of approximately ±2.2 FN at about 8 FN. If different pad welding and preparation procedures are used, these variations will increase.

A7.6 Even larger variations may be encountered if the welding technique allows excessive nitrogen pickup, in which case the ferrite can be much lower than it should be. High nitrogen pickup can cause a typical 8 FN deposit to drop to 0 FN. A nitrogen pickup of 0.10 percent will typically decrease the FN by about 8.

A7.7 Plate materials tend to be balanced chemically to have an inherently lower ferrite content than matching weld metals. Weld metal diluted with plate metal will usually be somewhat lower in ferrite than the undiluted weld metal, though this does vary depending on the amount of dilution and the composition of the base metal.

A7.8 The welding process used and the welding conditions and technique have a significant influence on the chemical composition and the ferrite content of the weld deposit in many instances. These influences must be considered by the user if the weld deposit must meet specific chemical or Ferrite Number limits. The purpose of A7.9.1 through A7.9.3 is to present

[6] Welding Research Council, Three Park Avenue, New York, NY 10016.

some general information on the effect of various welding processes on the chemical composition and the ferrite content of weld deposits made with filler metal classified in this specification.

A7.9 The chemical composition of a given weld deposit has the capability of providing an approximately predictable Ferrite Number for the deposit, as described in A7.13 with the limitations discussed here. However, important changes in the chemical compositions can occur from wire to deposit as described in A7.9.1 through A7.9.4.

A7.9.1 Gas Tungsten Arc Welding. This welding process involves the least change in the chemical composition from wire to deposit, and hence produces the smallest difference between the ferrite content calculated from the wire analysis and that measured on the deposit. There is some loss of carbon in gas tungsten arc welding—about half of the carbon content above 0.02 percent. Thus, a wire of 0.06 percent carbon will typically produce a deposit of 0.04 percent carbon. There is also some nitrogen pickup—a gain of 0.02 percent. The change in other elements is not significant in the undiluted weld.

A7.9.2 Gas Metal Arc Welding. For this process, typical carbon losses are low, only about one quarter those of the gas tungsten arc welding process. However, the typical nitrogen pickup is much higher than in gas tungsten arc welding, and it should be estimated at about 0.04 percent (equivalent to about 3 or 4 FN loss) unless specific measurements on welds for a particular application establish other values. Nitrogen pickup in this process is very dependent upon the welding technique and may go as high as 0.15 percent or more. This may result in little or no ferrite in the weld deposits of filler metals such as ER308 and ER309. Some slight oxidation plus volatilization losses may occur in manganese, silicon, chromium, nickel, and molybdenum contents.

A7.9.3 Submerged Arc Welding. Submerged arc welds show variable gains, losses of alloying elements, or both depending on the flux used. All fluxes produce some changes in the chemical composition as the electrode is melted and deposited as weld metal. Some fluxes deliberately add alloying elements such as columbium (niobium) and molybdenum; others are very active in the sense that they deplete significant amounts of certain elements that are readily oxidized, such as chromium. Other fluxes are less active and may contain small amounts of alloys to offset any losses and thereby, produce a weld deposit with a chemical composition close to the composition of the electrode. If the flux is active or alloyed, changes in the welding conditions, particularly voltage, will result in significant changes in the chemical composition of the deposit. Higher voltages produce greater flux/metal interactions and, for example, in the case of an alloy flux, greater alloy pickup.

TABLE A1
VARIATIONS OF ALLOYING ELEMENTS FOR SUBMERGED ARC WELDING

Element	Typical Change From Wire to Deposit
Carbon	Varies. On "L" grades usually a gain: +0.01 to +0.02 percent; on regular grades usually a loss: up to −0.02 percent
Silicon	Usually a gain: +0.3 to +0.6 percent
Chromium	Usually a loss unless a deliberate addition is made to the flux: −0.5 to −3.0 percent
Nickel	Little change unless a deliberate addition is made to the flux
Manganese	Varies: −0.5 to +0.5 percent
Molybdenum	Little change unless a deliberate addition is made to the flux
Columbium (Niobium)	Usually a loss unless a deliberate addition: −0.2 to −0.5 percent

A7.9.4 When close control of ferrite content is required, the effects of a particular flux/electrode combination should be evaluated before any production welding is undertaken due to the effects as shown in Table A1.

A7.10 Bare filler metal wire, unlike covered electrodes, cannot be adjusted for ferrite content by means of further alloy additions by the electrode producer, except through the use of flux in the submerged arc welding process. Thus, if specific FN ranges are desired, they must be obtained through wire chemistry selection. This is further complicated by the changes in the ferrite content from wire to deposit caused by the welding process and techniques, as previously discussed.

A7.11 In the 300 series filler metals, the compositions of the bare filler metal wires in general tend to cluster around the midpoints of the available chemical ranges. Thus, the potential ferrite for the 308, 308L, and 347 wires is approximately 10 FN, for the 309 wire approximately 12 FN, and for the 316 and 316L wires

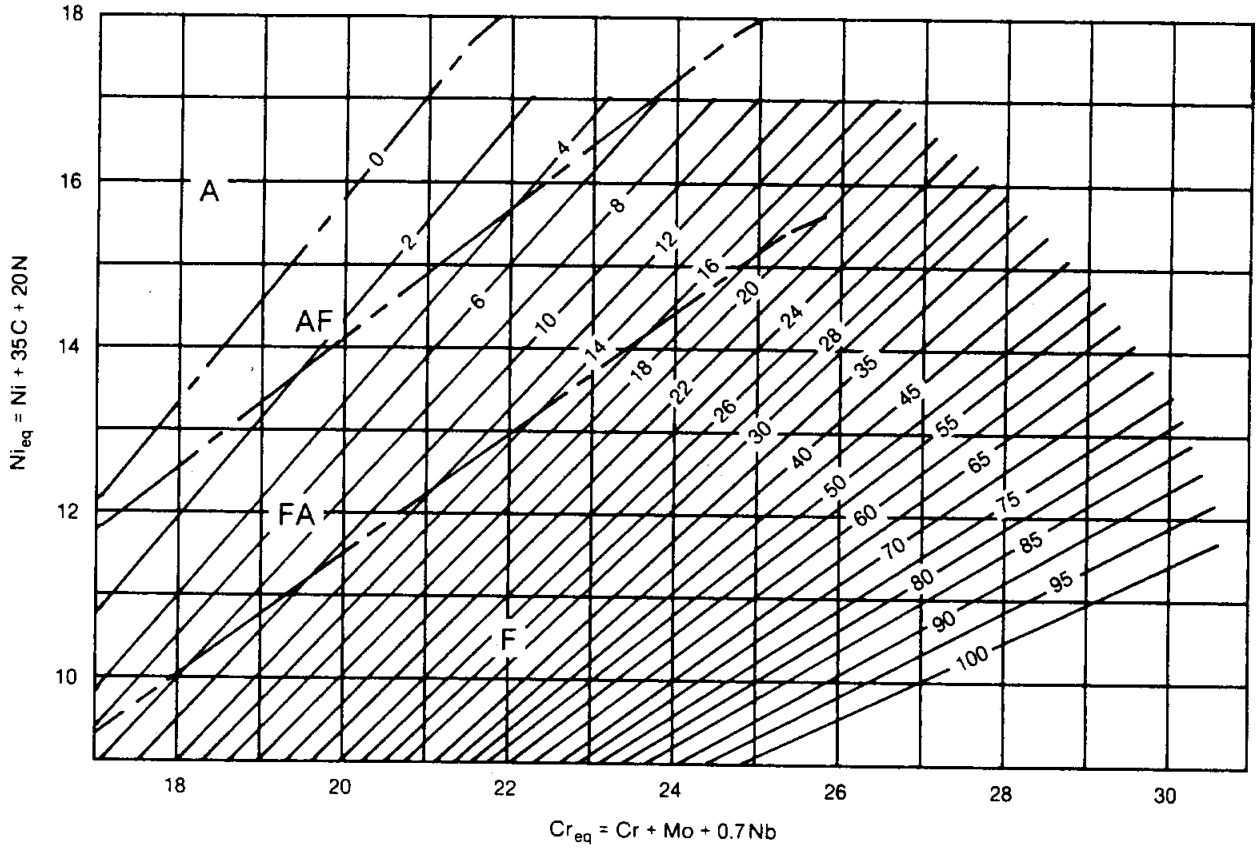

FIG. A1 WRC-1988 DIAGRAM FOR STAINLESS STEEL WELD METAL

approximately 5 FN. Around these midpoints, the ferrite contents may be ±7 FN or more, but the chemical compositions of these filler metals will still be within the chemical limits specified in this specification.

A7.12 In summary, the ferrite potential of a filler metal afforded by this chemical composition will, except for a few instances in submerged arc welding, be modified downward in the deposit due to changes in the chemical composition which are caused by the welding process and the technique used.

A7.13 The ferrite content of welds may be calculated from the chemical composition of the weld deposit. This can be done from one of several constitution diagrams. These are the WRC-1988 Diagram (Figure A1), the Espy Diagram (Figure A2), and the DeLong Diagram (Figure A3). There may be a wide range of results obtained from one diagram to another. The following paragraphs give some explanation of the differences among these diagrams and their recommended applications.

A7.13.1 WRC-1988 Diagram[7] (Figure A1) predicts ferrite in Ferrite Number (FN). This diagram is the newest of the diagrams mentioned. Studies within the WRC Subcommittee on Welding Stainless Steel and within Commission II of the International Institute of Welding show a closer agreement between measured and predicted ferrite using this diagram than when using the DeLong Diagram. It should be noted that predictions of the WRC-1988 Diagram are independent of silicon and manganese contents because these elements were not found to have statistically significant effects. The WRC-1988 Diagram is preferred for "300" series stainless steels and for duplex stainless alloys. It may not be applicable to compositions having greater than 0.2 percent of nitrogen and greater than 10 percent of manganese.

[7] McCowan, C. N., Siewert, T. A. and Olson, D. L. "Stainless steel weld metal: prediction of ferrite." Bulletin 342. New York: Welding Research Council, April 1989.

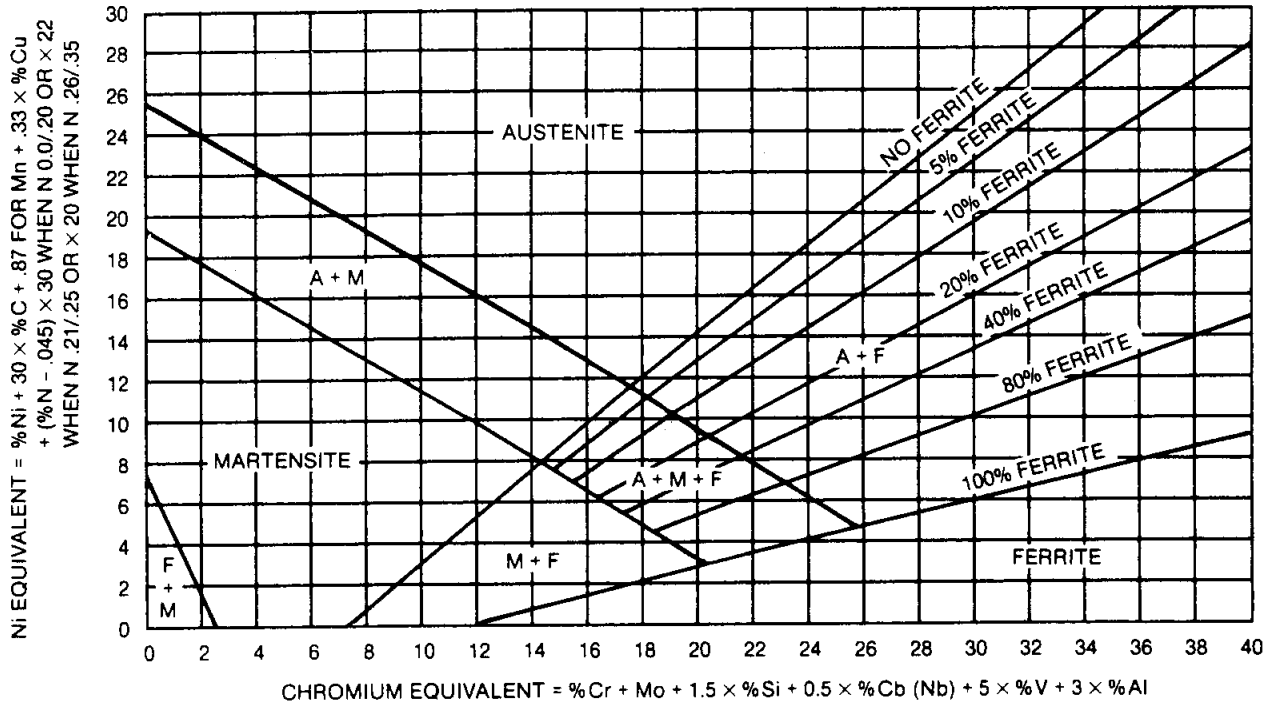

FIG. A2 ESPY PERCENT FERRITE DIAGRAM FOR STAINLESS STEEL WELD METAL

A7.13.2 Espy Diagram[8] (Figure A2) calculates the percent ferrite rather than FN of deposits of the "200" series (see A2.1) having manganese levels up to 15 percent and nitrogen contents up to 0.35 percent (nitrogen strengthened austenitic stainless steels).

A7.13.3 DeLong Diagram,[9] Figure A3, is a modified Schaeffler Diagram[10] predicting the Ferrite Number (FN) up to a maximum of 18 FN. The diagram includes the nitrogen level into the calculation to predict the FN. The DeLong modifications to the Schaeffler Diagram provide a better correlation between the calculated and measured ferrite content of the weld metal; therefore, the Schaeffler Diagram is not shown in this specification.

The new WRC-1988 Diagram (see A7.13.1) is the most accurate and preferred diagram for predicting the ferrite in "300" series stainless steel weld metals. Future publications of this specification may not include the DeLong Diagram.

A7.13.4 The differences between measured and calculated ferrite are somewhat dependent on the ferrite level of the deposit, increasing as the ferrite level increases. The agreement between the calculated and measured ferrite values is also strongly dependent on the quality of the chemical analysis. Variations in the results of the chemical analyses encountered from laboratory to laboratory can have significant effects on the calculated ferrite value, changing it as much as 4 to 8 FN. Cooling rate has a significant effect on the actual ferrite content and is one reason for the variations between calculated and measured ferrite of weld metal.

A8. Description and Intended Use of Filler Metals

A8.1 ER209. The nominal composition (wt.%) of this classification is 22 Cr, 11 Ni, 5.5 Mn, 2 Mo, and 0.20 N. Filler metals of this classification are most often used to weld UNS S20910 base metal. This alloy is a nitrogen-strengthened austenitic stainless steel exhibiting high strength and good toughness over a wide range of temperature. Weldments in the as-welded condition made using this filler metal are not subject

[8] Espy, R. H. "Weldability of nitrogen strengthened stainless steels." *Welding Journal* 61(5):149S-156S, 1982.

[9] DeLong, W. T. 1974 Adams Lecture: "Ferrite in austenitic stainless steel weld metal." *Welding Journal* 53 (7): 273-S-286-S, July 1974.

[10] Schaeffler, A. E. *Metal Progress* 56: 680-680B.

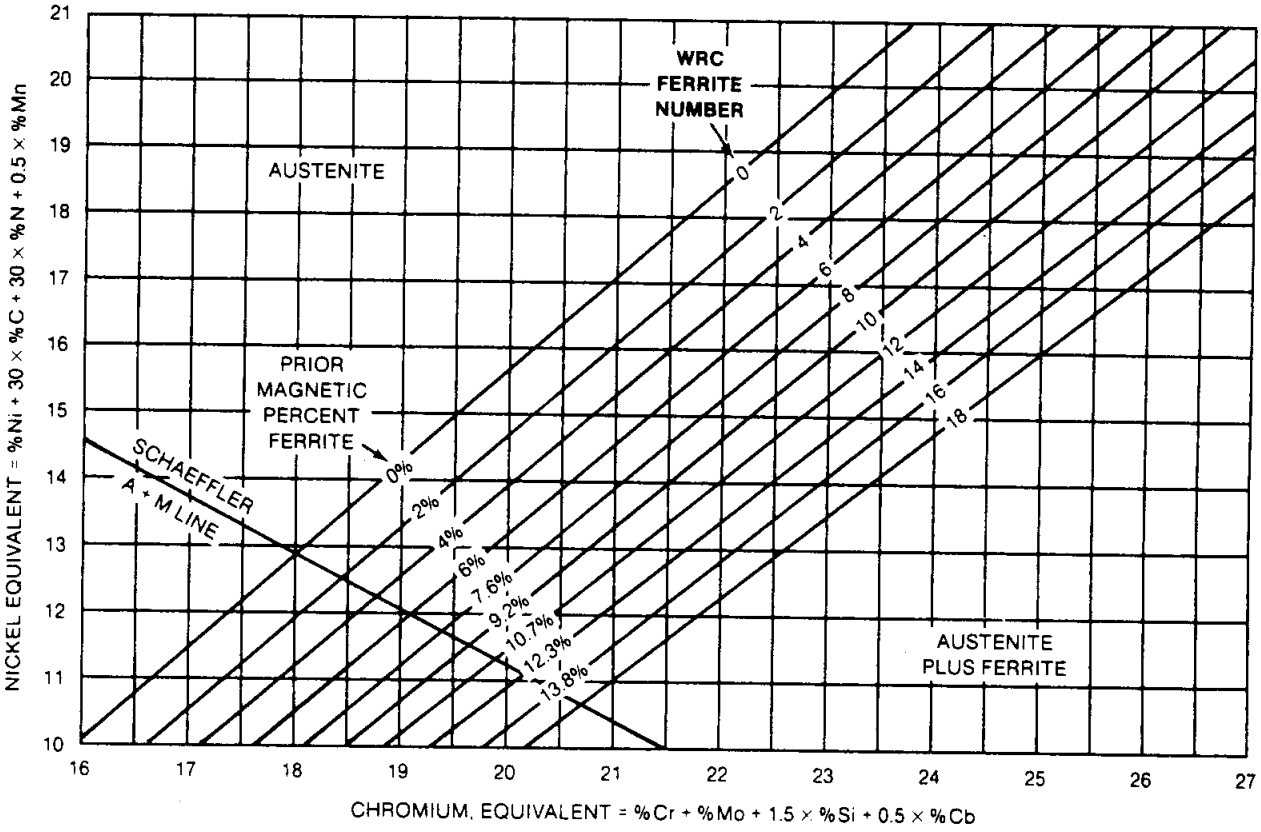

Calculate the nickel and chromium equivalents from the weld metal analysis. If nitrogen analysis of the weld metal is not available, assume 0.06% for GTA and covered electrode, or 0.08% for GMA weld metals. If the chemistry is accurate the diagram predicts the WRC Ferrite Number within plus or minus 3 in approximately 90% of the tests for the 308, 309, 316 and 317 families.

FIG. A3 DELONG (FN) DIAGRAM FOR STAINLESS STEEL WELD METAL

to carbide precipitation. Nitrogen alloying reduces the tendency for carbon diffusion and thereby increases resistance to intergranular corrosion.

The ER209 filler metal has sufficient total alloy content for use in welding dissimilar alloys like mild steel and the stainless steels, and also for direct overlay on mild steel for corrosion applications when used with the gas metal arc welding process.

The gas tungsten arc, plasma arc, and electron beam processes are not suggested for direct application of this filler metal on mild steel.

A8.2 ER218. The nominal composition (wt.%) of this classification is 17 Cr, 8.5 Ni, 8 Mn, 4 Si, and 0.13 N. Filler metals of this classification are most often used to weld UNS S21800 base metals. This alloy is a nitrogen-strengthened austenitic stainless steel exhibiting high strength and good toughness over a wide range of temperature. Nitrogen alloying in this base composition results in significant improvement in wear resistance in particle-to-metal and metal-to-metal (galling) applications when compared to the more conventional austenitic stainless steels such as Type 304. The ER218 filler metal has sufficient total alloy content for use in welding dissimilar alloys like mild steel and the stainless steels, and also for direct overlay on mild steel for corrosion and wear applications when used with the gas metal arc process. The gas tungsten arc, plasma arc, and electron beam processes are not suggested for direct application of this filler metal on mild steel.

A8.3 ER219. The nominal composition (wt.%) of this classification is 20 Cr, 6 Ni, 9 Mn, and 0.20 N. Filler metals of this classification are most often used to weld UNS S21900 base metals. This alloy is a nitrogen-strengthened austenitic stainless steel exhib-

(2) A composition balance of the weld metal giving a chromium-to-molybdenum ratio of less than 8.2 to 1

(3) Immersion of the weld metal in a corrosive medium. Attempts to classify the media in which accelerated corrosion will take place by attack on the ferrite phase have not been entirely successful. Strong oxidizing and mildly reducing environments have been present where a number of corrosion failures were investigated and documented. The literature should be consulted for latest recommendations.

A8.22 ER316H. This filler metal is the same as ER316, except that the allowable carbon content has been restricted to the higher portion of the 316 range. Carbon content in the range of 0.04 to 0.08 wt.% provides higher strength at elevated temperatures. This filler metal is used for welding 316H base metal.

A8.23 ER316L. This classification is the same as ER316, except for the carbon content. Low carbon (0.03 percent max.) in this filler metal reduces the possibility of intergranular chromium carbide precipitation and thereby increases the resistance to intergranular corrosion without the use of stabilizers such as columbium (niobium) or titanium. This filler metal is primarily used for welding low-carbon molybdenum-bearing austenitic alloys. This low-carbon alloy, however, is not as strong at elevated temperature as the columbium (niobium)-stabilized alloys or Type ER316H.

A8.24 ER316LSi. This classification is the same as ER316L, except for the higher silicon content. This improves the usability of the filler metal in the gas metal arc welding process (see A9.2). If the dilution by the base metal produces a low ferrite or fully austenitic weld, the crack sensitivity is somewhat higher than that of a lower silicon content weld metal.

A8.25 ER316Si. This classification is the same as ER316, except for the higher silicon content. This improves the usability of the filler metal in the gas metal arc welding process (see A9.2). If the dilution by the base metal produces a low ferrite or fully austenitic weld, the crack sensitivity of the weld is somewhat higher than that of a lower silicon content weld metal.

A8.26 ER317. The nominal composition (wt.%) of this classification is 19.5 Cr, 14 Ni, 3.5 Mo, somewhat higher than ER316. It is usually used for welding alloys of similar composition. ER317 filler metal is utilized in severely corrosive environments where crevice and pitting corrosion are of concern.

A8.27 ER317L. This classification is the same as ER317, except for the carbon content. Low carbon (0.03 percent max) in this filler metal reduces the possibility of intergranular carbide precipitation. This increases the resistance to intergranular corrosion without the use of stabilizers such as columbium (niobium) or titanium. This low-carbon alloy, however, may not be as strong at elevated temperature as the columbium (niobium)-stabilized alloys or Type 317.

A8.28 ER318. This composition is identical to ER316, except for the addition of columbium (niobium). Columbium (niobium) provides resistance to intergranular chromium carbide precipitation and thus increased resistance to intergranular corrosion. Filler metal of this classification is used primarily for welding base metals of similar composition.

A8.29 ER320. The nominal composition (wt.%) of this classification is 20 Cr, 34 Ni, 2.5 Mo, 3.5 Cu with Cb(Nb) added to provide resistance to intergranular corrosion. Filler metal of this classification is primarily used to weld base metals of similar composition for applications where resistance to severe corrosion involving a wide range of chemicals, including sulfuric and sulfurous acids and their salts, is required. This filler metal can be used to weld both castings and wrought alloys of similar composition without postweld heat treatment. A modification of this classification without columbium (niobium) is available for repairing castings which do not contain columbium (niobium), but with this modified composition, solution annealing is required after welding.

A8.30 ER320LR (Low Residuals). This classification has the same basic composition as ER320; however, the elements C, Si, P, and S are specified at lower maximum levels and the Cb(Nb) and Mn are controlled at narrower ranges. These changes reduce the weld metal hot cracking and fissuring (while maintaining the corrosion resistance) frequently encountered in fully austenitic stainless steel weld metals. Consequently, welding practices typically used for austenitic stainless steel weld metals containing ferrite can be used in bare filler metal welding processes such as gas tungsten arc and gas metal arc. ER320LR filler metal has been used successfully in submerged arc overlay welding, but it may be prone to cracking when used for joining base metal by the submerged arc process. ER320LR weld metal has a lower minimum tensile strength than ER320 weld metal.

A8.31 ER321. The nominal composition (wt.%) of this classification is 19.5 Cr, 9.5 Ni with titanium added. The titanium acts in the same way as columbium (niobium) in Type 347 in reducing intergranular chromium carbide precipitation and thus increasing resist-

ance to intergranular corrosion. The filler metal of this classification is used for welding chromium-nickel stainless steel base metals of similar composition, using an inert gas shielded process. It is not suitable for use with the submerged arc process because only a small portion of the titanium will be recovered in the weld metal.

A8.32 ER330. The nominal composition (wt.%) of this classification is 35.5 Ni, 16 Cr. Filler metal of this type is commonly used where heat and scale resisting properties above 1800°F (980°C) are required, except in high-sulphur environments, as these environments may adversely affect elevated temperature performance. Repairs of defects in alloy castings and the welding of castings and wrought alloys of similar composition are the most common applications.

A8.33 ER347. The nominal composition (wt.%) of this classification is 20 Cr, 10 Ni with Cb(Nb) added as a stabilizer. The addition of Cb(Nb) reduces the possibility of intergranular chromium carbide precipitation and thus susceptibility to intergranular corrosion. The filler metal of this classification is usually used for welding chromium-nickel stainless steel base metals of similar composition stabilized with either Cb(Nb) or Ti. Although Cb(Nb) is the stabilizing element usually specified in Type 347 alloys, it should be recognized that tantalum (Ta) is also present. Ta and Cb(Nb) are almost equally effective in stabilizing carbon and in providing high-temperature strength. If dilution by the base metal produces a low ferrite or fully austenitic weld metal, the crack sensitivity of the weld may increase substantially.

A8.34 ER347Si. This classification is the same as ER347, except for the higher silicon content. This improves the usability of the filler metal in the gas metal arc welding process (see A9.2). If the dilution by the base metal produces a low ferrite or fully austenitic weld, the crack sensitivity of the weld is somewhat higher than that of a lower silicon content weld metal.

A8.35 ER383. The nominal composition (wt.%) of this classification is 27.5 Cr, 31.5 Ni, 3.7 Mo, and 1 Cu. Filler metal of this classification is used to weld UNS N08028 base metal to itself, or to other grades of stainless steel. ER383 filler metal is recommended for sulphuric and phosphoric acid environments. The elements C, Si, P,and S are specified at low maximum levels to minimize weld metal hot cracking and fissuring (while maintaining the corrosion resistance) frequently encountered in fully austenitic stainless steel weld metals.

A8.36 ER385. The nominal composition (wt.%) of this classification is 20.5 Cr, 25 Ni, 4.7 Mo, and 1.5 Cu. ER385 filler metal is used primarily for welding of ASTM B625, B673, B674, and B677 (UNS N08904) materials for the handling of sulphuric acid and many chloride containing media. ER385 filler metal also may be used to join Type 317L material where improved corrosion resistance in specific media is needed. ER385 filler metal may be used for joining UNS N08904 base metals to other grades of stainless steel. The elements C, S, P, and Si are specified at lower maximum levels to minimize weld metal hot cracking, and fissuring (while maintaining corrosion resistance) frequently encountered in fully austenitic weld metals.

A8.37 ER409. This 12 Cr alloy (wt.%) differs from Type 410 material because it has a ferritic microstructure. The titanium addition forms carbides to improve corrosion resistance, increase strength at high temperature, and promote the ferritic microstructure. ER409 filler metals may be used to join matching or dissimilar base metals. The greatest usage is for applications where thin stock is fabricated into exhaust system components.

A8.38 ER409Cb. This classification is the same as ER409 except that columbium (niobium) is used instead of titanium to achieve similar results. Oxidation losses across the arc generally are lower. Applications are the same as those of ER409 filler metals.

A8.39 ER410. This 12 Cr alloy (wt.%) is an air-hardening steel. Preheat and postheat treatments are required to achieve welds of adequate ductility for many engineering purposes. The most common application of filler metal of this type is for welding alloys of similar composition. It is also used for deposition of overlays on carbon steels to resist corrosion, erosion, or abrasion.

A8.40 ER410NiMo. The nominal composition (wt.%) of this classification is 12 Cr, 4.5 Ni, 0.55 Mo. It is primarily designed for welding ASTM CA6NM castings or similar material, as well as light gage 410, 410S, and 405 base metals. Filler metal of this classification is modified to contain less chromium and more nickel to eliminate ferrite in the microstructure as it has a deleterious effect on mechanical properties. Final post-weld heat treatment should not exceed 1150°F (620°C), as higher temperatures may result in rehardening due to untempered martensite in the microstructure after cooling to room temperature.

A8.41 ER420. This classification is similar to ER410, except for slightly higher chromium and carbon con-

tents.ER420 is used for many surfacing operations requiring corrosion resistance provided by 12 percent chromium along with somewhat higher hardness than weld metal deposited by ER410 electrodes. This increases wear resistance.

A8.42 ER430. This is a 16 Cr (wt.%) alloy. The composition is balanced by providing sufficient chromium to give adequate corrosion resistance for the usual applications, and yet retain sufficient ductility in the heat-treated condition. (Excessive chromium will result in lower ductility.) Welding with filler metal of the ER430 classification usually requires preheating and postweld heat treatment.

Optimum mechanical properties and corrosion resistance are obtained only when the weldment is heat treated following the welding operation.

A8.43 ER446LMo. The nominal composition (wt.%) of this classification (formerly listed as ER26-1) is 26 Cr, 1 Mo. It is used for welding base metal of the same composition with inert gas shielded welding processes. Due to the high purity of both base metal and filler metal, cleaning of the parts before welding is most important. Complete coverage by shielding gas during welding is extremely important to prevent contamination by oxygen and nitrogen. Nonconventional gas shielding methods (leading, trailing, and back shielding) often are employed.

A8.44 ER502. The nominal composition (wt.%) of this classification is 5 Cr and 0.50 Mo. It is used for welding material of similar composition, usually in the form of pipe or tubing. The alloy is an air-hardening material, and therefore, when welding with this filler metal, preheating and postweld heat treatment are required.

A8.45 ER505. The nominal composition (wt.%) of this classification is 9 Cr, 1 Mo. Filler metal of this classification is used for welding base metal of similar composition, usually in the form of pipe or tubing. The alloy is an air-hardening material, and therefore, when welding with this filler metal, preheating and postweld heat treatment are required.

A8.46 ER630. The nominal composition (wt.%) of this classification is 16.4 Cr, 4.7 Ni, 3.6 Cu. The composition is designed primarily for welding ASTM A564 Type 630 and some other precipitation-hardening stainless steels. The composition is modified to prevent the formation of ferrite networks in the martensitic microstructure which have a deleterious effect on mechanical properties. Dependent on the application and weld size, the weld metal may be used either as-welded, welded and precipitation hardened, or welded, solution treated, and precipitation hardened.

A8.47 ER16-8-2. The nominal composition (wt.%) of this classification is 15.5 Cr, 8.5 Ni, 1.5 Mo. Filler metal of this classification is used primarily for welding stainless steel such as types 16-8-2, 316, and 347 for high-pressure, high-temperature piping systems. The weld deposit usually has a Ferrite Number no higher than 5 FN. The deposit also has good hot-ductility properties which offer greater freedom from weld or crater cracking even under restraint conditions. The weld metal is usable in either the as-welded condition or solution-treated condition. This filler metal depends on a very carefully balanced chemical composition to develop its fullest properties. Corrosion tests indicate that the 16-8-2 weld metal may have less corrosion resistance than 316 base metal, depending on the corrosive media. Where the weldment is exposed to severe corrodants, the surface layers should be deposited with a more corrosion-resistant filler metal.

A8.48 ER19-10H. The nominal composition (wt.%) of this classification is 19 Cr, 10 Ni and similar to ER308H except that the chromium content is lower and there are additional limits on Mo, Nb(Cb), and Ti. This lower limit of Cr and additional limits on other Cr equivalent elements allows a lower ferrite range to be attained. A lower ferrite level in the weld metal decreases the chance of sigma embrittlement after long-term exposure at temperatures in excess of 1000°F (540°C). This filler metal should be used in conjunction with welding processes and other welding consumables which do not deplete or otherwise significantly change the amount of chromium in the weld metal. If used with submerged arc welding, a flux that neither removes nor adds chromium to the weld metal is highly recommended.

This filler metal also has the higher carbon level required for improved creep properties in high-temperature service. The user is cautioned that actual weld application qualification testing is recommended in order to be sure that an acceptable weld metal carbon level is obtained. If corrosion or scaling is a concern, special testing, as outlined in Section A10, Special Tests, should be included in application testing.

A8.49 ER2209. The nominal composition (wt.%) of this classification is 22.5 Cr, 8.5 Ni, 3 Mo, 0.15 N. Filler metal of this classification is used primarily to weld duplex stainless steels which contain approximately 22 percent of chromium such as UNS S31803. Deposits of this alloy have "duplex" microstructures consisting of an austenite-ferrite matrix. These stainless

steels are characterized by high tensile strength, resistance to stress corrosion cracking, and improved resistance to pitting.

A8.50 ER2553. The nominal composition (wt.%) of this classification is 25.5 Cr, 5.5 Ni, 3.4 Mo, 2 Cu, 0.2 N. Filler metal of this classification is used primarily to weld duplex stainless steels which contain approximately 25 percent chromium. Deposits of this alloy have a "duplex" microstructure consisting of an austenite-ferrite matrix. These stainless steels are characterized by high tensile strength, resistance to stress corrosion cracking, and improved resistance to pitting.

A8.51 ER3556. The nominal composition (wt.%) of this classification is 29 Fe, 21 Ni, 22 Cr, 18.5 Co, 3 Mo, 2.5 W (UNS R30556). Filler metal of this classification is used for welding 31 Fe, 20 Ni, 22 Cr, 18 Co, 3 Mo, 2.5 W (UNS R30556) base metal to itself, for joining steel to other nickel alloys, and for surfacing steel by the gas tungsten arc, gas metal arc, and plasma arc welding processes. The filler metal is resistant to high-temperature corrosive environments containing sulfur. Typical specifications for 31 Fe, 20 Ni, 22 Cr, 18 Co, 3 Mo, 2.5 W base metal are ASTM B435, B572, B619, B622, and B626, UNS number R30556.

A9. Usability

A9.1 When welding stainless steels with the gas tungsten arc process, direct current electrode negative (dcen) is preferred. For base metal up to $^{1}/_{16}$ in. (1.6 mm) thick, argon is the preferred shielding gas because there is less tendency to melt through these lighter thicknesses. For greater thicknesses, or for automatic welding, mixtures of helium and argon are recommended because of the greater penetration and better surface appearance. Argon gas for shielding may also be used and will give satisfactory results in most cases, but a somewhat higher amperage will be required. For information on the effects of higher silicon, see A9.2 and the classification of interest.

A9.2 When using the gas metal arc welding process in which the filler metal is employed as an electrode, direct current electrode positive (dcep) is most commonly used. The shielding gas for spray transfer is usually argon, with or without minor additions of oxygen. For short circuiting transfer, shielding gases composed of helium plus additions of oxygen and carbon dioxide often are used. The minimum thickness that can be welded is approximately $^{1}/_{8}$ to $^{3}/_{16}$ in. (3.2 to 4.8 mm). However, thinner sections can be joined if a backing is used. The higher silicon levels improve the washing and wetting behavior of the weld metal. For instance, for increases from 0.30 to 0.65 percent silicon, the improvement is pronounced; for increases from 0.65 to 1.0 percent silicon, further improvement is experienced but is less pronounced.

A9.3 For submerged arc welding, direct current electrode positive (dcep) or alternating current (ac) may be used. Basic or neutral fluxes are generally recommended in order to minimize silicon pickup and the oxidation of chromium and other elements. When welding with fluxes that are not basic or neutral, electrodes having a silicon content below the normal 0.30 percent minimum may be desired for submerged arc welding. Such active fluxes may contribute some silicon to the weld metal. In this case, the higher silicon does not significantly improve the washing and wetting action of the weld metal.

A9.4 The strip cladding process closely resembles conventional submerged arc welding, except that a thin, consumable strip electrode is substituted for the conventional wire. Thus, the equipment consists of conventional submerged arc units with modified contact tips and feed rolls. Normal power sources with a minimum output of 750 amperes are used. If submerged arc equipment is available, then the same feeding motor, gear box, flux handling system, wire spool, and controls used to feed wire electrodes can be used for strip surfacing. The only difference in most cases is a strip welding head and "bolt-on" adaptor plate.

Strip surfacing is generally carried out using direct current supplied either from a generator or from a rectifier. Power sources with either constant voltage or drooping characteristics are used routinely.

A constant-voltage power source is preferable, however, generator or rectifier type can be connected in parallel to produce higher current for specific applications. The use of direct current electrode positive (dcep) yields somewhat better edge shape and a more regular deposit surface.

A10. Special Tests

A10.1 Corrosion or Scaling Tests. Tests of joint specimens have the advantage that the joint design and welding procedure can be made identical to that being used in fabrication. They have the disadvantage of testing the combined properties of the weld metal, the heat-affected zone of the base metal, and the unaffected base metal. Furthermore, it is difficult to obtain reproducible data if a difference exists between the corrosion or oxidation rates of the various metal structures (weld metal, heat-affected zone, and unaffected base metal).

Test samples cannot be readily standardized if welding procedure and joint design are to be considered variables. Joint specimens for corrosion tests should not be used for qualifying the filler metal, but may be used for qualifying welding procedures using approved materials. Special corrosion or scale resisting tests which are pertinent to the intended application may be conducted as agreed upon between the purchaser and supplier. This section is included for the guidance of those who desire to specify such special tests.

A10.2 The heat treatments, surface finish, and marking of the specimens prior to testing should be in accordance with standard practices for tests of similar alloys in the wrought or cast forms. The testing procedure should correspond to ASTM G4, *Standard Method for Conducting Corrosion Tests in Plant Equipment,* or ASTM A262, *Standard Practices for Detecting Susceptibility to Intergranular Attack in Austenitic Stainless Steels.*

A10.3 Tests for Mechanical Properties. The tensile properties, bend ductility, and soundness of welds produced using filler metal which conforms with this specification are frequently determined during welding procedure qualification. For cryogenic applications, impact properties of welds are required. It should be realized that the variables in the process, such as current, voltage, and welding speed; variables in the shielding medium, such as the gas mixture or flux; variables in the manual dexterity of the welder; and variables in the composition of the base metal influence the results which may be obtained. When properly controlled, however, these filler metals will give sound welds under widely varying conditions with tensile strength and ductility similar to that obtained by the covered arc welding electrodes.

Tensile and elongation requirements for weld metal deposited by shielded metal arc welding (covered) electrodes specified in ANSI/AWS A5.4, *Specification for Stainless Steel Electrodes for Shielded Metal Arc Welding,* are shown in Table A2. For a discussion of impact properties for cryogenic applications, see Appendix A8 of ANSI/AWS A5.4. Note that the impact properties of welds made with bare filler metals in the GTAW or GMAW processes are usually superior to those produced with the SMAW or SAW processes. When supplementary tests for mechanical properties are specified, the procedures should be in accordance with the latest edition of ANSI/AWS B4.0, *Standard Methods for Mechanical Testing of Welds.*

A11. Safety Considerations

A11.1 Burn Protection. Molten metal, sparks, slag, and hot work surfaces are produced by welding, cutting, and allied processes. These can cause burns if precautionary measures are not used. Workers should wear protective clothing made of fire resistant material. Pant cuffs, open pockets, or other places on clothing that can catch and retain molten metal or sparks should not be worn. High-top shoes or leather leggings and fire-resistant gloves should be worn. Pant legs should be worn over the outside of high-top shoes. Helmets or hand shields that provide protection for the face, neck, and ears, and a head covering to protect the head should be used. In addition, appropriate eye protection should be used.

When welding overhead or in confined spaces, ear plugs to prevent weld spatter from entering the ear canal should be worn. In addition, goggles or equivalent should be worn to give added eye protection. Clothing should be kept free of grease and oil. Combustible materials should not be carried in pockets. If any combustible substance has been spilled on clothing, a change to clean, fire-resistant clothing should be made before working with open arcs or flame. Aprons, cape-sleeves, leggings, and shoulder covers with bibs designed for welding service should be used. Where welding or cutting of unusually thick base metal is involved, sheet metal shields should be used for extra protection. Mechanization of highly hazardous processes or jobs should be considered. Other personnel in the work area should be protected by the use of noncombustible screens or by the use of appropriate protection as described in the previous paragraph. Before leaving a work area, hot workpieces should be marked to alert other persons of this hazard. No attempt should be made to repair or disconnect electrical equipment when it is under load. Disconnection under load produces arcing of the contacts and may cause burns or shock, or both. *(Note: Burns can be caused by touching hot equipment such as electrode holders, tips, and nozzles. Therefore, insulated gloves should be worn when these items are handled, unless an adequate cooling period has been allowed before touching.)* The following sources are for more detailed information on personal protection:

(1) ANSI/ASC Z49.1, *Safety in Welding and Cutting,* published by the American Welding Society, 550 N.W. LeJeune Road, P.O. Box 351040, Miami, FL 33135.

(2) Code of Federal Regulations, Title 29 Labor, Chapter XVII, Part 1910, OSHA General Industry Standards available from the U.S. Government Printing Office, Washington, DC 20402.

TABLE A2
TENSILE REQUIREMENTS FOR ALL-WELD-METAL FROM ANSI/AWS A5.4-92

AWS Classification	Tensile Strength, min		Elongation min Percent	Heat Treatment
	ksi	MPa		
E209-XX	100	690	15	None
E219-XX	90	620	15	None
E240-XX	100	690	15	None
E307-XX	85	590	30	None
E308-XX	80	550	35	None
E308H-XX	80	550	35	None
E308L-XX	75	520	35	None
E308Mo-XX	80	550	35	None
E308MoL-XX	75	520	35	None
E309-XX	80	550	30	None
E309L-XX	75	520	30	None
E309Cb-XX	80	550	30	None
E309Mo-XX	80	550	30	None
E309MoL-XX	75	520	30	None
E310-XX	80	550	30	None
E310H-XX	90	620	10	None
E310Cb-XX	80	550	25	None
E310Mo-XX	80	550	30	None
E312-XX	95	660	22	None
E316-XX	75	520	30	None
E316H-XX	75	520	30	None
E316L-XX	70	490	30	None
E317-XX	80	550	30	None
E317L-XX	75	520	30	None
E318-XX	80	550	25	None
E320-XX	80	550	30	None
E320LR-XX	75	520	30	None
E330-XX	75	520	25	None
E330H-XX	90	620	10	None
E347-XX	75	520	30	None
E349-XX	100	690	25	None
E383-XX	75	520	30	None
E385-XX	75	520	30	None
E410-XX	75	450	20	a
E410NiMo-XX	110	760	15	c
E430-XX	65	450	20	d
E502-XX	60	420	20	b
E505-XX	60	420	20	b
E630-XX	135	930	7	e
E16-8-2-XX	80	550	35	None
E7Cr-XX	60	420	20	b
E2209-XX	100	690	20	None
E2553-XX	110	760	15	None

NOTES:

a. Heat to 1350 to 1400°F (730 to 760°C), hold for one hour, furnace cool at a rate of 100°F (60°C) per hour to 600°F (315°C) and air cool to ambient.

b. Heat to 1550 to 1600°F (840 to 870°C), hold for two hours, furnace cool at a rate not exceeding 100°F (55°C) per hour to 1100°F (595°C) and air cool to ambient.

c. Heat to 1100 to 1150°F (595 to 620°C), hold for one hour, and air cool to ambient.

d. Heat to 1400 to 1450°F (760 to 790°C), hold for two hours, furnace cool at a rate not exceeding 100°F (55°C) per hour to 1100°F (595°C) and air cool to ambient.

e. Heat to 1875 to 1925°F (1025 to 1050°C), hold for one hour, and air cool to ambient, and then precipitation harden at 1135 to 1165°F (610 to 630°C), hold for four hours, and air cool to ambient.

(3) ANSI/ASC Z41.1, *Safety-Toe Footwear,* American National Standards Institute, 11 West 42 Street, 13th Floor, New York, NY 10036.

A11.2 Electrical Hazards. Electric shock can kill. However, it can be avoided. Live electrical parts should not be touched. The manufacturer's instructions and recommended safe practices should be read and understood. Faulty installation, improper grounding, and incorrect operation and maintenance of electrical equipment are all sources of danger.

All electrical equipment and the workpieces should be grounded. The workpiece lead is not a ground lead. It is used only to complete the welding circuit. A separate connection is required to ground the workpiece.

The correct cable size should be used, since sustained overloading will cause cable failure and result in possible electrical shock or fire hazard. All electrical connections should be tight, clean, and dry. Poor connections can overheat and even melt. Further, they can produce dangerous arcs and sparks. Water, grease, or dirt should not be allowed to accumulate on plugs, sockets, or electrical units. Moisture can conduct electricity. To prevent shock, the work area, equipment, and clothing should be kept dry at all times. Welders should wear dry gloves and rubber soled shoes, or stand on a dry board or insulated platform. Cables and connections should be kept in good condition. Improper or worn electrical connections may create conditions that could cause electrical shock or short circuits. Worn, damaged, or bare cables should not be used. Open circuit voltage should be avoided. When several welders are working with arcs of different polarities, or when a number of alternating current machines are being used, the open circuit voltages can be additive. The added voltages increase the severity of the shock hazard.

In case of electric shock, the power should be turned **OFF**. If the rescuer must resort to pulling the victim from the live contact, nonconducting materials should be used. If the victim is not breathing, cardiopulmonary resuscitation (CPR) should be administered as soon as contact with the electrical source is broken. A physician should be called and CPR continued until breathing has been restored, or until a physician has arrived. Electrical burns are treated as thermal burns; that is, clean, cold (iced) compresses should be applied. Contamination should be avoided; the area should be covered with a clean, dry dressing; and the patient should be transported to medical assistance.

Recognized safety standards such as ANSI/ASC Z49.1, *Safety in Welding and Cutting,* and the *NFPA No. 70, National Electrical Code,* available from National Fire Protection Association, Batterymarch Park, Quincy, MA 02269, should be followed.

A11.3 Fumes and Gases. Many welding, cutting, and allied processes produce fumes and gases which may be harmful to health. Fumes are solid particles which originate from welding filler metals and fluxes, the base metal, and any coatings present on the base metal. Gases are produced during the welding process or may be produced by the effects of process radiation on the surrounding environment. Management, welders, and other personnel a like should be aware of the effects of these fumes and gases. The amount and composition of these fumes and gases depend upon the composition of the filler metal and base metal, welding process, current level, arc length, and other factors.

The possible effects of over exposure range from irritation of eyes, skin, and respiratory system to more severe complications. Effects may occur immediately or at some later time. Fumes can cause symptoms such as nausea, headaches, dizziness, and metal fume fever. The possibility of more serious health effects exists when especially toxic materials are involved. In confined spaces, the shielding gases and fumes might displace breathing air and cause asphyxiation. One's head should always be kept out of the fumes. Sufficient ventilation, exhaust at the arc, or both, should be used to keep fumes and gases from your breathing zone and the general area.

In some cases, natural air movement will provide enough ventilation. Where ventilation may be questionable, air sampling should be used to determine if corrective measures should be applied.

More detailed information on fumes and gases produced by the various welding processes may be found in the following:

(1) The permissible exposure limits required by OSHA can be found in *Code of Federal Regulations,* Title 29, Chapter XVII Part 1910. The OSHA General Industry Standards are available from the Superintendent of Documents, U.S. Government Printing Office, Washington, DC 20402.

(2) The recommended threshold limit values for these fumes and gases may be found in *Threshold Limit Values for Chemical Substances and Physical Agents in the Workroom Environment,* published by the American Conference of Governmental Industrial Hygienists (ACGIH), 6550 Glenway Avenue, Building D-5, Cincinnati, OH 45211.

(3) The results of an AWS-funded study are available in a report entitled, *Fumes and Gases in the Welding*

Environment, available from the American Welding Society.

A11.4 Radiation. Welding, cutting, and allied operations may produce radiant energy (radiation) harmful to health. One should become acquainted with the effects of this radiant energy.

Radiant energy may be ionizing (such as x-rays), or non-ionizing (such as ultraviolet, visible light, or infrared). Radiation can produce a variety of effects such as skin burns and eye damage, depending on the radiant energy's wavelength and intensity, if excessive exposure occurs.

A11.4.1 Ionizing Radiation. Ionizing radiation is produced by the electron beam welding process. It is ordinarily controlled within acceptance limits by use of suitable shielding enclosing the welding area.

A11.4.2 Non-Ionizing Radiation. The intensity and wavelengths of non-ionizing radiant energy produced depend on many factors, such as the process, welding parameters, electrode and base metal composition, fluxes, and any coating or plating on the base metal. Some processes such as resistance welding and cold pressure welding ordinarily produce negligible quantities of radiant energy. However, most arc welding and cutting processes (except submerged arc when used properly), laser welding and torch welding, cutting, brazing, or soldering can produce quantities of non-ionizing radiation such that precautionary measures are necessary.

Protection from possible harmful effects caused by non-ionizing radiant energy from welding include the following measures:

(1) One should not look at welding arcs except through welding filter plates which meet the requirements of ANSI/ASC Z87.1, *Practice for Occupational and Educational Eye and Face Protection,* published by American National Standards Institute, 11 West 42 Street, 13th Floor, New York, NY 10036. Transparent welding curtains are not intended as welding filter plates, but rather are intended to protect a passerby from incidental exposure.

(2) Exposed skin should be protected with adequate gloves and clothing as specified in ANSI/ASC Z49.1, *Safety in Welding and Cutting,* published by American Welding Society.

(3) Reflections from welding arcs should be avoided, and all personnel should be protected from intense reflections. (Note: Paints using pigments of substantially zinc oxide or titanium dioxide have a lower reflectance for ultraviolet radiation.)

(4) Screens, curtains, or adequate distance from aisles, walkways, etc., should be used to avoid exposing passersby to welding operations.

(5) Safety glasses with UV protective side shields provide some beneficial protection from ultraviolet radiation produced by welding arcs.

A11.4.3 Ionizing radiation information sources include the following:

(1) American Welding Society. ANSI/AWS F2.1, *Recommended Safe Practices for Electron Beam Welding and Cutting,* available from the American Welding Society.

(2) Manufacturer's product information literature.

A11.4.4 The following include non-ionizing radiation information sources:

(1) Hinrichs, J. F. "Project committee on radiation—summary report". *Welding Journal,* January, 1978.

(2) National Technical Information Service. *Non-ionizing radiation protection special study no. 42-0053-77, evaluation of the potential hazards from actinic ultraviolet radiation generated by electric welding and cutting arcs.* Springfield, VA: National Technical Information Service. ADA-033768.

(3) _____, *Non-ionizing radiation protection special study no. 42-0312-77, evaluation of the potential retinal hazards from optical radiation generated by electrical welding and cutting arcs.* Springfield, VA: National Technical Information Service. ADA-043023.

(4) Moss, C. E. and Murray, W. E. "Optical radiation levels produced in gas welding, torch brazing, and oxygen cutting." *Welding Journal,* September 1979.

(5) "Optical radiation levels produced by air-carbon arc cutting processes." *Welding Journal,* March 1980.

(6) American National Standards Institute. ANSI/ASC Z136.1, *Safe use of lasers.* New York: American National Standards Institute.

(7) American Welding Society. ANSI/ASC Z49.1, *Safety in welding and cutting.* Miami, FL: American Welding Society.

(8) American National Standards Institute. ANSI/ASC Z87.1, *Practice for occupational and educational eye and face protection.* New York: National Standards Institute.

(9) Moss, C. E. "Optical radiation transmission levels through transparent welding curtains." *Welding Journal,* March 1979.

SPECIFICATION FOR BARE ALUMINUM AND ALUMINUM-ALLOY WELDING ELECTRODES AND RODS

01

SFA-5.10

(Identical with AWS Specification A5.10/A5.10M:1999)

1. Scope

This specification prescribes requirements for the classification of bare aluminum and aluminum-alloy welding electrodes and rods for use with the gas metal arc, gas tungsten arc, oxyfuel gas, and plasma arc welding processes.

PART A — GENERAL REQUIREMENTS

2. Normative References

2.1 The following ANSI/AWS[1] standard is referenced in the mandatory sections of this document:

ANSI/AWS A5.01, *Filler Metal Procurement Guidelines.*

2.2 The following ASTM[2] standards are referenced in the mandatory sections of this document:

ASTM E 29, *Standard Practice for Using Significant Digits in Test Data to Determine Conformance with Specifications.*

ASTM E 34, *Standard Methods for Chemical Analysis of Aluminum and Aluminum Alloys.*

ASTM B 108, *Standard Specification for Aluminum Alloy Permanent Mold Castings.*

ASTM E 142, *Standard Method for Controlling Quality of Radiographic Testing.*

ASTM B 209, *Standard Specification for Aluminum and Aluminum-Alloy Sheet and Plate.*

2.3 The following ISO[3] standard is referenced in the mandatory sections of this document:

ISO 864, *Arc Welding — Solid and Tubular Cored Wires which Deposit Carbon and Carbon Manganese Steel — Dimensions of Wires, Spools, Rims, and Coils.*

3. Classification

3.1 The electrodes and rods covered by this A5.10/A5.10M specification are classified using a system that is independent of U.S. Customary Units and the International System of Units (SI). Classification is according to the chemical composition of the filler metal as specified in Table 1 and their usability as specified in Section 9, Weld Test Assemblies, and Table 2.

3.2 Any filler metal tested and classified as an electrode shall also be classified as a welding rod. Filler metal tested and classified only as a welding rod shall not be classified as an electrode.

3.3 The electrodes and rods classified under this specification are intended for gas metal arc, gas tungsten arc, oxyfuel gas, and plasma arc welding, but that is not to prohibit their use with any other process for which they are found suitable.

3.4 Filler metal containing more than 0.0008 percent by weight of beryllium shall not be classified as electrode and should not be used as an electrode (see A12.3).

[1] ANSI/AWS standards may be obtained from the American Welding Society, 550 N.W. LeJeune Road, Miami, FL 33126.

[2] ASTM standards can be obtained from the American Society for Testing and Materials, 100 Barr Harbor Drive, West Conshohocken, PA 19428-2959.

[3] ISO standards may be obtained from the American National Standards Institute (ANSI), 11 W. 42nd Street, 13th Floor, New York, NY 10036.

TABLE 1
CHEMICAL COMPOSITION REQUIREMENTS FOR ALUMINUM ELECTRODES AND RODS

AWS Classification	UNS Number[c]	Weight Percent[a,b]									Other Elements		
		Si	Fe	Cu	Mn	Mg	Cr	Ni	Zn	Ti	Each	Total	Al
ER1100	A91100	d	d	0.05–0.20	0.05	—	—	—	0.10	—	0.05[e]	0.15	99.0 min[f]
R1100	A91100	d	d	0.05–0.20	0.05	—	—	—	0.10	—	0.05[e]	0.15	99.0 min[f]
ER1188[g]	A91188	0.06	0.06	0.005	0.01	0.01	—	—	0.03	0.01	0.01[e]	—	99.88 min[f]
R1188[g]	A91188	0.06	0.06	0.005	0.01	0.01	—	—	0.03	0.01	0.01[e]	—	99.88 min[f]
ER2319[h]	A92319	0.20	0.30	5.8–6.8	0.20–0.40	0.02	—	—	0.10	0.10–0.20	0.05[e]	0.15	Remainder
R2319[h]	A92319	0.20	0.30	5.8–6.8	0.20–0.40	0.02	—	—	0.10	0.10–0.20	0.05[e]	0.15	Remainder
ER4009	A94009	4.5–5.5	0.20	1.0–1.5	0.10	0.45–0.6	—	—	0.10	0.20	0.05[e]	0.15	Remainder
R4009	A94009	4.5–5.5	0.20	1.0–1.5	0.10	0.45–0.6	—	—	0.10	0.20	0.05[e]	0.15	Remainder
ER4010	A94010	6.5–7.5	0.20	0.20	0.10	0.30–0.45	—	—	0.10	0.20	0.05[e]	0.15	Remainder
R4010	A94010	6.5–7.5	0.20	0.20	0.10	0.30–0.45	—	—	0.10	0.20	0.05[e]	0.15	Remainder
R4011[k]	A94011	6.5–7.5	0.20	0.20	0.10	0.45–0.7	—	—	0.10	0.04–0.20	0.05	0.15	Remainder
ER4043	A94043	4.5–6.0	0.8	0.30	0.05	0.05	—	—	0.10	0.20	0.05[e]	0.15	Remainder
R4043	A94043	4.5–6.0	0.8	0.30	0.05	0.05	—	—	0.10	0.20	0.05[e]	0.15	Remainder
ER4047	A94047	11.0–13.0	0.8	0.30	0.15	0.10	—	—	0.20	—	0.05[e]	0.15	Remainder
R4047	A94047	11.0–13.0	0.8	0.30	0.15	0.10	—	—	0.20	—	0.05[e]	0.15	Remainder
ER4145	A94145	9.3–10.7	0.8	3.3–4.7	0.15	0.15	0.15	—	0.20	—	0.05[e]	0.15	Remainder
R4145	A94145	9.3–10.7	0.8	3.3–4.7	0.15	0.15	0.15	—	0.20	—	0.05[e]	0.15	Remainder
ER4643	A94643	3.6–4.6	0.8	0.10	0.05	0.10–0.30	—	—	0.10	0.15	0.05[e]	0.15	Remainder
R4643	A94643	3.6–4.6	0.8	0.10	0.05	0.10–0.30	—	—	0.10	0.15	0.05[e]	0.15	Remainder
ER5183	A95183	0.40	0.40	0.10	0.50–1.0	4.3–5.2	0.05–0.25	—	0.25	0.15	0.05[e]	0.15	Remainder
R5183	A95183	0.40	0.40	0.10	0.50–1.0	4.3–5.2	0.05–0.25	—	0.25	0.15	0.05[e]	0.15	Remainder
ER5356	A95356	0.25	0.40	0.10	0.05–0.20	4.5–5.5	0.05–0.20	—	0.10	0.06–0.20	0.05[e]	0.15	Remainder
R5356	A95356	0.25	0.40	0.10	0.05–0.20	4.5–5.5	0.05–0.20	—	0.10	0.06–0.20	0.05[e]	0.15	Remainder
ER5554	A95554	0.25	0.40	0.10	0.50–1.0	2.4–3.0	0.05–0.20	—	0.25	0.05–0.20	0.05[e]	0.15	Remainder
R5554	A95554	0.25	0.40	0.10	0.50–1.0	2.4–3.0	0.05–0.20	—	0.25	0.05–0.20	0.05[e]	0.15	Remainder
ER5556	A95556	0.25	0.40	0.10	0.50–1.0	4.7–5.5	0.05–0.20	—	0.25	0.05–0.20	0.05[e]	0.15	Remainder
R5556	A95556	0.25	0.40	0.10	0.50–1.0	4.7–5.5	0.05–0.20	—	0.25	0.05–0.20	0.05[e]	0.15	Remainder

(Continued)

TABLE 1 (CONT'D)
CHEMICAL COMPOSITION REQUIREMENTS FOR ALUMINUM ELECTRODES AND RODS

AWS Classification	UNS Number[c]	Weight Percent[a,b]											
											Other Elements		
		Si	Fe	Cu	Mn	Mg	Cr	Ni	Zn	Ti	Each	Total	Al
ER5654	A95654	i	i	0.05	0.01	3.1–3.9	0.15–0.35	—	0.20	0.05–0.15	0.05[e]	0.15	Remainder
R5654	A95654	i	i	0.05	0.01	3.1–3.9	0.15–0.35	—	0.20	0.05–0.15	0.05[e]	0.15	Remainder
R-206.0[j]	A02060	0.10	0.15	4.2–5.0	0.20–0.50	0.15–0.35	—	0.05	0.10	0.15–0.30	0.05	0.15	Remainder
R-C355.0	A33550	4.5–5.5	0.20	1.0–1.5	0.10	0.40–0.6	—	—	0.10	0.20	0.05	0.15	Remainder
R-A356.0	A13560	6.5–7.5	0.20	0.20	0.10	0.25–0.45	—	—	0.10	0.20	0.05	0.15	Remainder
R-357.0	A03570	6.5–7.5	0.15	0.05	0.03	0.45–0.6	—	—	0.05	0.20	0.05	0.15	Remainder
R-A357.0[k]	A13570	6.5–7.5	0.20	0.20	0.10	0.40–0.7	—	—	0.10	0.04–0.20	0.05	0.15	Remainder

NOTES:
a. The filler metal shall be analyzed for the specific elements for which values are shown in this table. If the presence of other elements is indicated in the course of this work, the amount of those elements shall be determined to ensure that they do not exceed the limits specified for "Other Elements."
b. Single values are maximum, except where otherwise specified.
c. SAE/ASTM Unified Numbering System for Metals and Alloys.
d. Silicon plus iron shall not exceed 0.95 percent.
e. Beryllium shall not exceed 0.0008 percent.
f. The aluminum content for unalloyed aluminum is the difference between 100.00 percent and the sum of all other metallic elements present in amounts of 0.010 percent or more each, expressed to the second decimal before determining the sum.
g. Vanadium content shall be 0.05 percent maximum. Gallium content shall be 0.03 percent maximum.
h. Vanadium content shall be 0.50–0.15 percent. Zirconium content shall be 0.10–0.25 percent.
i. Silicon plus iron shall not exceed 0.45 percent.
j. Tin content shall not exceed 0.05 percent.
k. Beryllium content shall be 0.04–0.07 percent.

TABLE 2
REQUIRED TESTS

AWS Classification	Chemical Analysis	Radiographic Test[a] (Electrode)	Bead-On-Plate Test (Rod)
ER1100	X	X	—
R1100	X	—	X
ER1188	X	X	—
R1188	X	—	X
ER2319	X	X	—
R2319	X	—	X
ER4009	X	X	—
R4009	X	—	X
ER4010	X	X	—
R4010	X	—	X
R4011	X	—	X
ER4043	X	X	—
R4043	X	—	X
ER4047	X	X	—
R4047	X	—	X
ER4145	X	X	—
R4145	X	—	X
ER4643	X	X	—
R4643	X	—	X
ER5183	X	X	—
R5183	X	—	X
ER5356	X	X	—
R5356	X	—	X
ER5554	X	X	—
R5554	X	—	X
ER5556	X	X	—
R5556	X	—	X
ER5654	X	X	—
R5654	X	—	X
R-206.0	X	—	X
R-C355.0	X	—	X
R-A356.0	X	—	X
R-357.0	X	—	X
R-A357.0	X	—	X

NOTE:
a. Filler metal meeting the radiographic requirement, when tested as an electrode, is not required to be tested as a rod, as specified in 9.2.

4. Acceptance

Acceptance[4] of the material shall be in accordance with the provisions of ANSI/AWS A5.01, *Filler Metal Procurement Guidelines.*

5. Certification

By affixing the AWS specification and classification designations to the packaging, or the classification to the product, the manufacturer certifies that the product meets the requirements of this specification.[5]

6. Units of Measure and Rounding-Off Procedure

6.1 This specification makes use of both U.S. Customary Units and the International System of Units (SI). The measurements are not exact equivalents; therefore, each system must be used independently of the other

[4] See A3, Acceptance (in the Appendix) for further information concerning acceptance, testing of the material shipped, and ANSI/AWS A5.01, *Filler Metal Procurement Guidelines.*

[5] See A4, Certification (in the Appendix) for the further information concerning certification and the testing called for to meet this requirement.

without combining values in any way. The specification with the designation A5.10 uses the U.S. Customary Units. The specification A5.10M uses SI Units. The latter are shown in appropriate columns in tables and in figures, and within brackets [ ] when used in the text.

6.2 For the purpose of determining conformance with this specification, an observed or calculated value shall be rounded to the "nearest unit" in the last right-hand place of figures used in expressing the limiting value in accordance with the rounding-off method given in ASTM E 29, *Standard Practice for Using Significant Digits in Test Data to Determine Conformance with Specifications.*

PART B — TESTS, PROCEDURES, AND REQUIREMENTS

7. Summary of Tests

The tests required for each classification are specified in Table 2. The purpose of these tests is to determine the chemical composition of the filler metal, soundness of the weld metal produced by gas metal arc welding electrodes, and the deposition characteristics of welding rods. The base metal for the weld test assemblies, the welding and testing procedures to be employed, and the results required are given in Sections 9 through 12.

8. Retest

If the results of any test fail to meet the requirement, that test shall be repeated twice. The results of both retests shall meet the requirement. Material for retests may be taken from the original test sample or from one or two new samples. For chemical analysis, retest need be only for those specific elements that failed to meet the test requirement. If the results of one or both retests fail to meet the requirement, the material under test shall be considered as not meeting the requirements of this specification for that classification.

In the event that, during preparation or after completion of any test, it is clearly determined that prescribed or proper procedures were not followed in preparing the test sample(s), or in conducting the test, the test shall be considered invalid, without regard to whether the test was actually completed, or whether test results met, or failed to meet, the requirement. That test shall be repeated following proper prescribed procedures. In this case, the requirement for doubling the number of test specimens does not apply.

9. Weld Test Assemblies

9.1 Two weld test assemblies are required:

(a) The groove weld test assembly for the usability of electrodes and the soundness of the weld metal (see Fig. 1).

(b) The bead-on-plate weld test assembly for the usability of rods (see 9.4).

9.2 Usability tests shall be made using electrodes and welding rods of each size. A filler metal that satisfactorily meets the requirements of the radiographic soundness test, when tested as an electrode, may also be classified as a welding rod without being subjected to the bead-on-plate test required for a welding rod. A filler metal that satisfactorily meets the bead-on-plate weld test requirements, when tested as a welding rod, shall also be tested as an electrode and meet the requirements of the radiographic soundness test in order to be classified as an electrode.

9.3 Groove Weld for Soundness and Usability of Electrodes

9.3.1 A test assembly shall be prepared and welded, as specified in Fig. 1 and 9.3.2 through 9.3.4, using base metal of the appropriate type specified in Table 3. The welding position shall be as specified in Fig. 1 for the different electrode sizes and classifications. Testing of the assembly shall be as specified in Section 11, Radiographic Test.

9.3.2 Welding of the test assembly shall be done using the gas metal arc welding process with techniques and procedures specified by the manufacturer as to the factors not covered herein.

9.3.3 Dimensions of the groove weld joint and the position of welding shall be as specified in Fig. 1 for the electrode diameter being tested. The backing material shall be of the same type of base metal as the test plate base metal.

9.3.4 The test assembly shall be at a temperature of not less than 60°F [16°C] when commencing the initial or subsequent weld passes. Also, the initial or interpass temperatures shall not exceed 150°F [66°C].

9.4 Bead-on-Plate Weld Test for Usability of Welding Rods

9.4.1 The test assembly shall consist of a sheet or plate approximately 6 in. [150 mm] by 12 in. [300 mm] upon which a weld shall be made as specified in 9.4.2, using base metal of the appropriate type specified in Table 3. Examination of the assembly shall be as specified in Section 12, Bead-on-Plate Test.

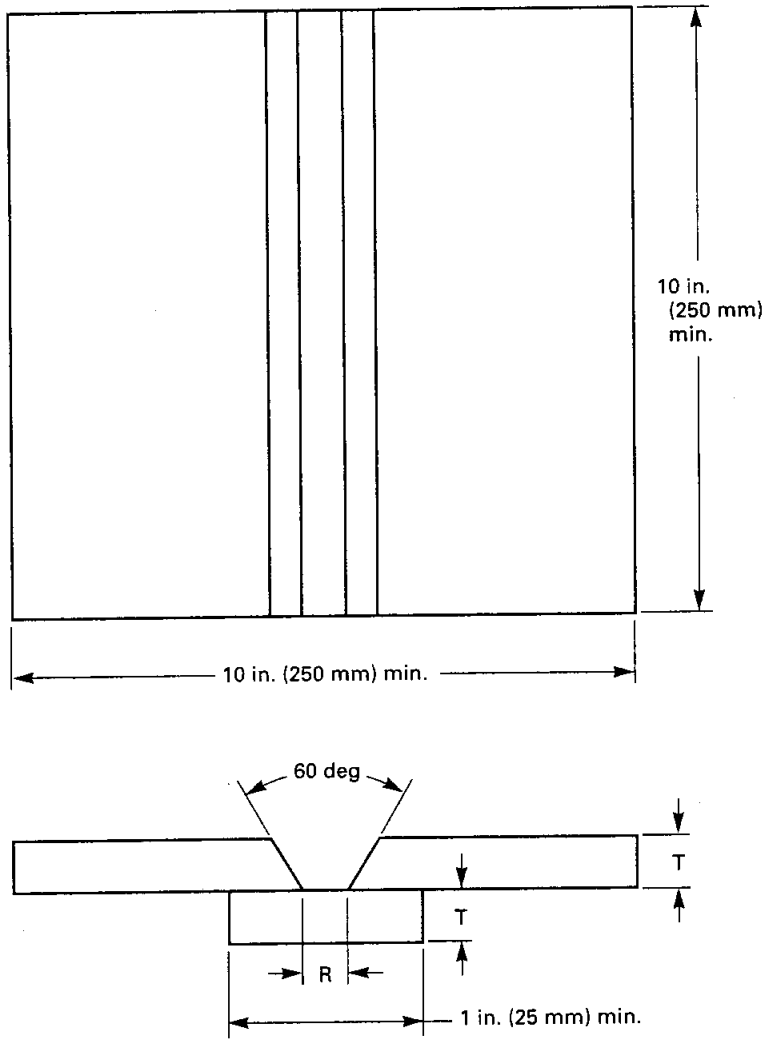

Electrode Diameter		Plate Thickness, T (Note C)		Nominal Root Opening, R		Welding Position
in.	mm	in.	mm	in.	mm	
0.030 0.035	0.8 0.9	3/16 or 1/4	5 or 6.5	1/4	6.5	Overhead
3/64	1.0 1.2	1/4 1/4	6.5 6.5	1/4 1/4	6.5 6.5	Overhead
1/16	1.6 2.0	3/8 3/8	10 10	3/8 3/8	10 10	Overhead
3/32	2.4 2.5	3/8 3/8	10 10	3/8 3/8	10 10	Flat
1/8	3.2	3/8	10	1/2	13	Flat

GENERAL NOTES:
(a) Assembly shall be welded employing the gas metal arc welding process.
(b) Assembly may be machined or extruded as a single piece if the dimensions shown are maintained for the specific electrode size being tested.
(c) A variation of ±5% in the specified plate thickness is acceptable.

FIG. 1 GROOVE WELD TEST ASSEMBLY FOR RADIOGRAPHIC TEST

TABLE 3
BASE METAL FOR TEST ASSEMBLIES

Electrode and Rod (AWS Classification)	Base Metal[1] (Aluminum Association Designations)[2]
ER1100, R1100, ER1188, R1188	1060, 1100, 1350, or 3003
ER2319, R2319, ER4145, R4145	2014, 2219, or 3003
ER 4009, R4009, ER4010, R4010 R4011, ER4043, R4043 ER4047, R4047, ER4643, R4643	3003 or 6061
ER5183, R5183, ER5356, R5356 ER5554, R5554, ER5556 R5556, ER5654, R5654	3004, 5052, 5083, 5086 5154, 5454, or 5456
R-206.0	206.0, 2014, 2219, or 3003
R-C355.0	355.0, C355.0, or 3003
R-A356.0, R357.0, R-A357.0	356.0, A356.0, 357.0, A357.0, or 3003

NOTES:
1. All wrought base alloys 1060, 1100, 2014, 2219, 3003, 3004, 5052, 5083, 5086, 5154, 5454, and 6061 are included in ASTM B209. Cast base alloys 355.0, C355.0, 356.0, A356.0, 357.0, and A357.0 are included in ASTM B108.
2. The Aluminum Association, Inc., 900 19th Street, N.W., Suite 300, Washington, DC 20006.

9.4.2 Welding of the assembly shall be done in the flat position with the gas tungsten arc welding process employing alternating current and argon gas shielding. The test plate thickness and the welding current shall be compatible with the rod being tested.

9.4.3 The completed bead-on-plate welds shall be examined with the unaided eye (corrected to normal vision) and shall meet the requirements specified in Section 12, Bead-on-Plate Test.

9.4.4 A welding rod satisfactorily meeting the bead-on-plate test requirement using gas tungsten arc welding also is suitable for use with the oxyfuel gas and plasma arc welding processes.

10. Chemical Analysis

10.1 A sample of the filler metal, or the stock from which it is made, shall be prepared for chemical analysis.

10.2 The sample shall be analyzed by accepted analytical methods.[6] The referee method shall be ASTM E 34, *Standard Methods for Chemical Analysis of Aluminum and Aluminum Alloys.*

[6] See Section A10 (in the Appendix) for further information concerning accepted analytical methods.

10.3 The results of the analysis shall meet the requirements of Table 1 for the classification of electrode or rod under test.

11. Radiographic Test

11.1 The groove weld described in 9.3 and shown in Fig. 1 shall be radiographed to evaluate the soundness of the weld metal and to determine the usability of the electrode. In preparation for radiography, the backing shall be removed and both surfaces of the weld shall be machined or ground smooth. Both surfaces of the test assembly, in the area of the weld, shall be smooth enough to avoid difficulty in interpreting the radiograph.

11.2 The weld shall be radiographed in accordance with ASTM E 142, *Standard Method for Controlling Quality of Radiographic Testing.* The quality level of inspection shall be 2-2T.

11.3 The soundness of the weld metal and the usability of the electrode meet the requirements of this specification if the radiograph shows no cracks, no incomplete fusion, and no rounded indications in excess of those permitted by the radiographic standards in Fig. 2 for test assemblies welded in the overhead position for electrode sizes up to and including $^{1}/_{16}$ in. [1.6 mm] and Fig. 3 for test assemblies welded in the flat position for electrode sizes larger than $^{1}/_{16}$ in.

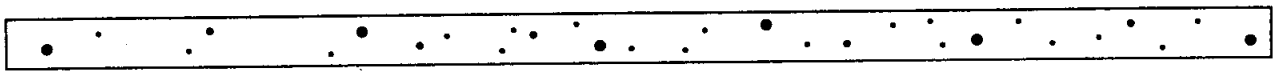

Assorted Rounded Indications

Size permitted is 0.050 in. (1.3 mm) maximum
Number permitted in any 6 in. (150 mm) of weld is 72

Large:	Up to 0.050 in. (1.3 mm)—6 permitted
Medium:	Up to 0.031 in. (0.8 mm)—6 permitted
Small:	Up to 0.020 in. (0.5 mm)—6 permitted

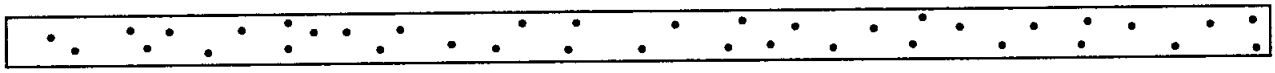

Medium Rounded Indications

Size permitted is 0.030 in. (0.8 mm) maximum
Number permitted in any 6 in. (150 mm) of weld is 39

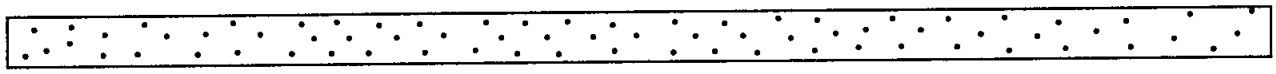

Small Rounded Indications

Size permitted is 0.020 in. (0.5 mm) maximum
Number permitted in any 6 in. (150 mm) of weld is 72

GENERAL NOTES:
(a) In using these standards, the chart that is most representative of the size of the rounded indications present in the test specimen radiograph shall be used for determining conformance to these radiographic standards.
(b) Indications which do not exceed $^{1}/_{64}$ in. (0.4 mm) diameter or length, or both, shall be disregarded.
(c) Total area of porosity in a 6 in. (150 mm) length of weld is 0.0225 sq in. (14.52 sq mm) based on 1.5% T per in. (25 mm) where T is the base metal thickness.

FIG. 2A RADIOGRAPHIC ACCEPTANCE STANDARDS FOR TEST ASSEMBLIES — OVERHEAD WELDING POSITION

[1.6 mm]. In evaluating the radiograph, the center 6 in. [150 mm] of the test specimen shall be considered, and all extra weld shall be disregarded.

A rounded indication is an indication on the radiograph whose length is no more than three times its width. Rounded indications may be circular, elliptical, conical, or irregular in shape and they may have tails. The size of the rounded indication is the largest dimension of the indication including any tail that may be present. Indications whose largest dimension does not exceed $^{1}/_{64}$ in. [0.4 mm] shall be disregarded. Test assemblies with indications larger than the large indications permitted in the radiographic standards do not meet the requirements of this specification.

11.4 An electrode that produces a groove weld which satisfactorily meets these radiographic requirements may also be classified as a welding rod under this specification without conducting the test specified in 9.4.

12. Bead-on-Plate Test

12.1 Welding rod tested in accordance with 9.4 shall produce weld metal that flows freely and uniformly without sputtering or other irregularities. The resultant weld metal shall be smooth and uniform with no visible evidence of cracks or porosity.

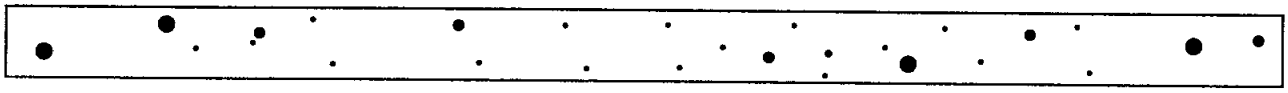

Assorted Rounded Indications

Size permitted is 0.075 in. (1.9 mm) maximum
Number permitted in any 6 in. (150 mm) of weld is 26 with the following restrictions:

Large:	Up to 0.075 in. (1.9 mm)—4 permitted
Medium:	Up to 0.049 in. (1.3 mm)—5 permitted
Small:	Up to 0.020 in. (0.5 mm)—17 permitted

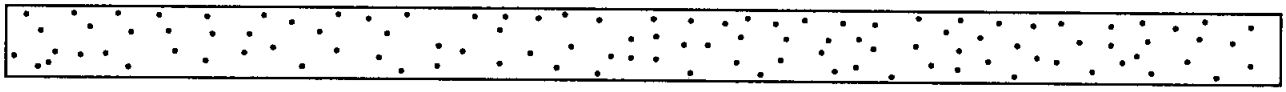

Small Rounded Indications

Size permitted is 0.020 in. (0.5 mm) maximum
Number permitted in any 6 in. (150 mm) of weld is 108

GENERAL NOTES:
(a) In using these standards, the chart that is most representative of the size of the rounded indications present in the test specimen radiograph shall be used for determining conformance to these radiographic standards.
(b) Indications which do not exceed $\frac{1}{64}$ in. (0.4 mm) diameter or length, or both, shall be disregarded.
(c) Total area of porosity in a 6 in. (150 mm) length of weld is 0.0337 sq in. (21.7 sq mm) based on 1.5% T per in. (25 mm) where T is the base metal thickness.

RADIOGRAPHIC ACCEPTANCE STANDARDS FOR $\frac{3}{8}$ IN. (10 MM) THICK TEST ASSEMBLIES

These radiographic acceptance standards are identical to those previously incorporated in MIL-E-16053L (Amendment 2, 20 October 1980) and as Class 3 NAVSEA 0900-LP-003-9000. (See Annex A5.)

FIG. 2B RADIOGRAPHIC ACCEPTANCE STANDARDS FOR TEST ASSEMBLIES — OVERHEAD WELDING POSITION

12.2 If a filler metal satisfactorily meets the weld-bead-test requirements when tested as a welding rod, it also shall be tested as an electrode if it is to be classified as an electrode.

PART C — MANUFACTURE, IDENTIFICATION, AND PACKAGING

13. Method of Manufacture

The electrodes and rods classified according to this specification may be manufactured by any method that will produce material that meets the requirements of this specification.

14. Standard Sizes

14.1 Standard sizes for round filler metal in the different package forms of straight lengths, coils without support, and spools are as shown in Table 4. Diameters of cast rods in straight lengths are approximate with no specified tolerance.

14.2 Typical sizes for flattened shapes of straight length welding rod are shown in Table 5. The cross-sectional area of such shapes shall be equivalent to that of corresponding round rods of the same nominal diameter as listed in Table 5.

15. Finish and Uniformity

15.1 All filler metal shall have a smooth finish that is free from slivers, depressions, scratches, scale, seams, laps, and foreign matter that would adversely affect the welding characteristics, the operation of the welding equipment, or the properties of the weld metal.

15.2 Each continuous length of filler metal shall be from a single lot of material, and welds, when present,

TABLE 4
STANDARD SIZES[a]

Standard Package Form	Diameter in.[b]	Diameter mm	Tolerance in.	Tolerance mm
Straight lengths and coils without support[c,d]	1/16 (0.062)	1.6	+0.001 −0.002	+0.03 −0.05
		2.0		
	3/32 (0.094)	2.4		
	(0.098)	2.5		
	1/8 (0.125)	3.2		
	5/32 (0.156)	4.0		
	3/16 (0.187)	4.8		
	(0.197)	5.0		
	1/4 (0.250)	6.4		
4 in. (100 mm) spools and 8 in. (200 mm) spools	0.030	0.8	+0.001 −0.002	+0.03 −0.05
	0.035	0.9		
	(0.039)	1.0		
	3/64 (0.047)	1.2		
	1/16 (0.062)	1.6		
12 in. (300 mm) spools	0.030	0.8	+0.001 −0.002	+0.03 −0.05
	0.035	0.9		
	(0.039)	1.0		
	3/64 (0.047)	1.2		
	1/16 (0.062)	1.6		
	(0.079)	2.0		
	3/32 (0.094)	2.4		
	(0.098)	2.5		
	1/8 (0.125)	3.2		
13-1/2 in. (340 mm) spools	1/16 (0.062)	1.6	+0.001 −0.002	+0.03 −0.05
	(0.079)	2.0		
	3/32 (0.094)	2.4		
	(0.098)	2.5		
	1/8 (0.125)	3.2		

NOTES:
a. Dimensions, tolerances, and package forms (for round filler metal) other than those shown shall be as agreed by purchaser and supplier.
b. Decimal inch are exact conversions with appropriate rounding.
c. There is no specified tolerance for cast rod in straight lengths.
d. Length of wrought rods shall be 36 in., +0, −1/2 in. (approximately 900 ± 20 mm). Length of cast rods shall be 18 in., ± 1/2 in. (450 mm ± 2%).
e. Metric sizes not shown in ISO 864.

shall have been made so as not to interfere with the uniform, uninterrupted feeding of the filler metal on automatic and semiautomatic equipment.

16. Standard Package Forms

16.1 Standard package forms are straight lengths, coils without support, and spools. Standard package dimensions and weights for each form are given in Table 6. Package forms, sizes and weights other than these shall be as agreed between purchaser and supplier.

16.2 Dimensions of the standard spool sizes shall be as shown in Figs. 4 and 5. Spools shall be designed and constructed to prevent distortion of themselves and of the filler metal during normal handling and use and shall be clean and dry enough to maintain the cleanliness of the filler metal.

17. Winding Requirements

17.1 Filler metal on spools and in coils without support shall be wound so that kinks, waves, sharp

TABLE 5
TYPICAL SIZES OF FLATTENED RODS[a]

Equivalent Round Diameter		Thickness		Width	
in.	mm	in.	mm	in.	mm
1/16	1.6	0.047	1.2	0.072	1.8
	2.0[b]		1.5		2.1
3/32	2.4	0.070	1.8	0.105	2.7
	2.5[b]		1.9		2.6
1/8	3.2	0.095	2.4	0.142	3.6
5/32	4.0	0.115	2.9	0.175	4.4
3/16	4.8	0.140	3.6	0.210	5.3
	5.0[b]		3.8		5.2
1/4	6.4	0.187	4.8	0.280	7.1

NOTES:
a. Standard length shall be 36 in., +0, −1/2 in. (900 mm ± 2%).
b. Metric sizes not normally available in the U.S.A.

bends, overlapping, or wedging are not encountered, leaving the filler metal free to unwind without restriction. The outside end of the filler metal (the end with which welding is to begin) shall be identified so it can be located readily and shall be fastened to avoid unwinding.

17.2 The outermost layer of spooled electrode or spooled rod shall not be closer than 1/8 in. [3 mm] to the outside diameter of the flanges.

17.3 The cast and helix of filler metal on spools shall be such that the filler metal will feed in an uninterrupted manner in automatic and semiautomatic equipment.

18. Filler Metal Identification

18.1 The product information and the precautionary information required in Section 20, Marking of Packages, shall also appear on each coil and spool.

18.2 Coils without support shall have a tag containing this information securely attached to the filler metal at the inside end of the coil.

18.3 Spools shall have the information securely affixed in a prominent location on the outside of at least one flange of the spool.

19. Packaging

Filler metal shall be suitably packaged to ensure against damage during shipment and storage under normal conditions.

20. Marking of Packages

20.1 The following product information (as a minimum) shall be legibly marked so as to be visible from the outside of each unit package:

(a) AWS specification[7] and classification designation (year of issue may be excluded)

(b) Supplier's name and trade designation

(c) Size and net weight

(d) Lot, control, or heat number

20.2 The following precautionary information (as a minimum) shall be prominently displayed in legible print on all packages of welding material, including individual unit packages enclosed within a larger package:

WARNING:

Protect yourself and others. Read and understand this label.

FUMES AND GASES can be dangerous to your health.

ARC RAYS can injure eyes and burn skin.

ELECTRIC SHOCK can kill.

- Before use, read and understand the manufacturer's instructions, Material Safety Data Sheets (MSDSs), and your employer's safety practices.
- Keep your head out of the fumes.

[7] Products supplied in U.S. Customary Units shall be marked A5.10. If all dimensional and other requirements of A5.10M are met, the product may be marked A5.10/A5.10M.

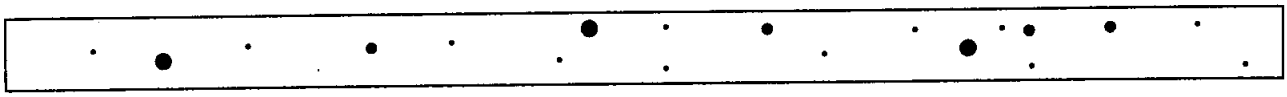

Assorted Rounded Indications

Size permitted is 0.075 in. (1.9 mm) maximum
Number permitted in any 6 in. (150 mm) of weld is 17 with the following restrictions:

Large: Up to 0.075 in. (1.9 mm)—3 permitted
Medium: Up to 0.049 in. (1.3 mm)—3 permitted
Small: Up to 0.020 in. (0.5 mm)—11 permitted

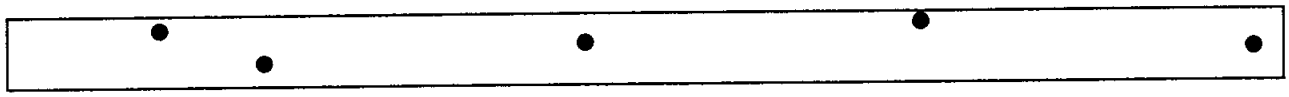

Large Rounded Indications

Size permitted is 0.075 in. (1.9 mm) maximum
Number permitted in any 6 in. (150 mm) of weld is 5

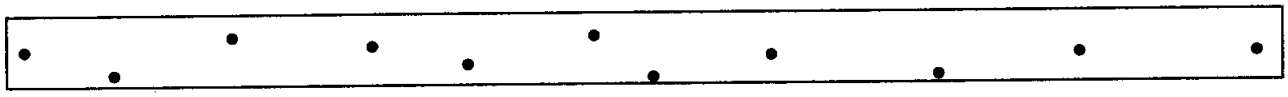

Medium Rounded Indications

Size permitted is 0.049 in. (1.3 mm) maximum
Number permitted in any 6 in. (150 mm) of weld is 11

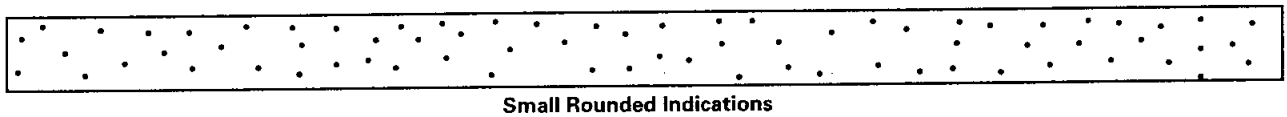

Small Rounded Indications

Size permitted is 0.020 in. (0.5 mm) maximum
Number permitted in any 6 in. (150 mm) of weld is 72

GENERAL NOTES:
(a) In using these standards, the chart that is most representative of the size of the rounded indications present in the test specimen radiograph shall be used for determining conformance to these radiographic standards.
(b) Indications which do not exceed $\frac{1}{64}$ in. (0.4 mm) diameter or length, or both, shall be disregarded.
(c) Total area of porosity in a 6 in. (150 mm) length of weld is 0.0225 sq in. (14.52 sq mm) based on 1.0% T per in. (25 mm) where T is the base metal thickness.

These radiographic acceptance standards are identical to that previously incorporated in MIL-E-16053L (Amendment 2, 20 October 1980) and as Class 1 NAVSEA 0900-LP-003-9000. (See Annex A5.)

FIG. 3 RADIOGRAPHIC ACCEPTANCE STANDARD FOR TEST ASSEMBLIES — FLAT POSITION WELDING

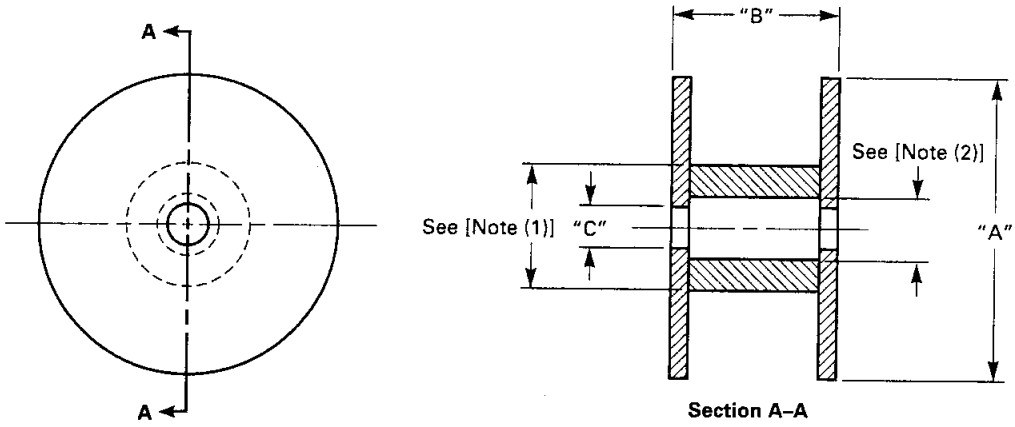

Dimensions of standard 4 in. (100 mm) spool

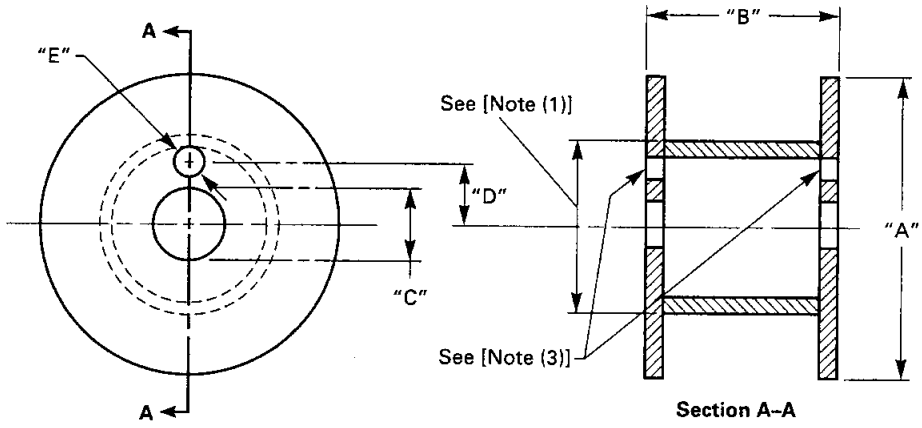

Dimensions of standard 8 and 12 in. (200 and 300 mm) spools

		4 in. (100 mm)		8 in. (200 mm)		12 in. (300 mm)	
		in.	mm.	in.	mm	in.	mm
A	Diameter, max. [Note (4)]	4.0	102	8.0	203	12	305
B	Width Tolerance	1.75 +0.03	46 +0, −2	2.16 +0.03	56 +0, −3	4.0 +0.06	103 +0, −3
C	Diameter Tolerance	0.63 +0.01, −0	16 +1, −0	2.03 +0.06, −0	50.5 +2.5, −0	2.03 +0.06, −0	50.5 +2.5, −0
D	Distance between axes Tolerance	— —	— —	1.75 ±0.02	44.5 ±0.5	1.75 ±0.02	44.5 ±0.5
E	Diameter [Note (3)] Tolerance	— —	— —	0.44 +0, −0.06	10 +1, −0	0.44 +0, −0.06	10 +1, −0

NOTES:
(1) Outside diameter of barrel shall be such as to permit feeding of the filler metals.
(2) Inside diameter of the barrel shall be such that swelling of the barrel or misalignment of the barrel and flanges will not result in the inside diameter of the barrel being less than the inside diameter of the flanges.
(3) Holes are provided on each flange, but they need not be aligned. No driving holes required for 4 in. (100 mm) spools.
(4) Metric dimensions and tolerances conform to ISO 864 except "A" specifies ± tolerances on the nominal diameter, rather than a plus tolerance only, which is shown here as a maximum.

FIG. 4 DIMENSIONS OF 4, 8, AND 12 IN. (100, 200, AND 300 MM) DIAMETER SPOOLS

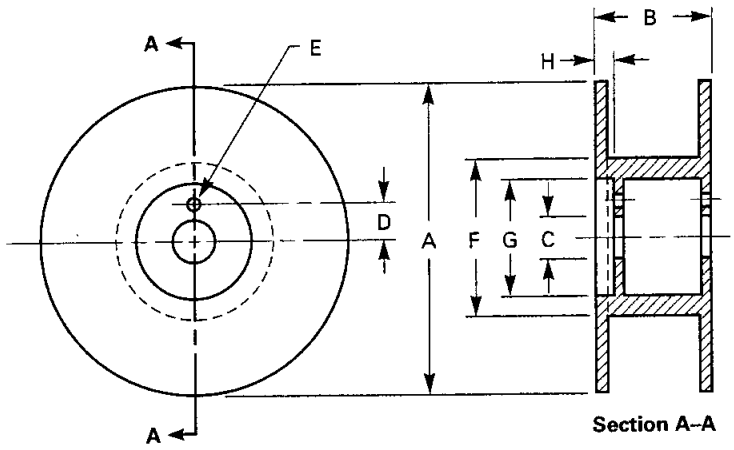

		in.	mm
A	Diameter Tolerance	13.50 −0.063, +0	342 ±1
B	Width Tolerance	5.125 +0.063	130 ±1.6
C	Diameter Tolerance	2.03 −0, +0.006	50.5 +2.5, −0
D	Distance between axes Tolerance	1.75 ±0.02	44.5 ±0.5
E	Diameter Tolerance	0.44 ±0, −0.06	10 +1, −0
F	Diameter Tolerance	7.0 ±0.031	177.5 ±1
G	Diameter Tolerance	5.0 ±0.031	127 ±0.8
H	Recess Tolerance	1.125 +0.125, −0	31 ±2

GENERAL NOTE: Holes are provided on each flange, but they need not be aligned.

FIG. 5 DIMENSIONS OF STANDARD 13½ IN. (340 MM) DIAMETER SPOOL

TABLE 6
STANDARD PACKAGES, DIMENSIONS, AND WEIGHTS[a]

Package Form[b]		Nominal Net Weight	
		lb	kg
Straight Lengths		5	2.5
		10	5
		25	10
		50	25
Coils Without Support[c]		25	10
		50	25
Spools[d]			
in.	mm		
4	100	1	0.5
8	200	5	2.5
12	300	10–26	5–12
13-½	340	30	15

NOTES
a. Filler metal diameters for all forms and lengths are given in Table 4.
b. No more than one classification or size shall be included in each unit package.
c. Dimensions of coils shall be as agreed between purchaser and supplier.
d. Dimensions of standard spools are shown in Figs. 4 and 5.

- Use enough ventilation, exhaust at the arc, or both, to keep fumes and gases away from your breathing zone and the general area.
- Wear correct eye, ear, and body protection.
- Do not touch live electrical parts.
- See American National Standard Z49.1, *Safety in Welding and Cutting*, published by the American Welding Society, 550 N.W. LeJeune Road, P.O. Box 351040, Miami, FL 33135; OSHA Safety and Health Standards, 29 CFR 1910, available from the U.S. Government Printing Office, Washington, DC 20402.

DO NOT REMOVE THIS INFORMATION

Appendix A
Guide to AWS Specification for Bare Aluminum and Aluminum-Alloy Welding Electrodes and Rods

(This Appendix is not a part of AWS A5.10/A5.10M:1999, Specification for Bare Aluminum and Aluminum-Alloy Welding Electrodes and Rods, but is included for information purposes only.)

A1. Introduction

This guide is designed to correlate the filler metal classifications with their intended applications so the specification can be used more effectively. Reference to appropriate base metal alloys is made whenever that can be done and when it would be helpful. Such references are intended as examples rather than complete listings of the materials for which each filler metal is suitable.

A2. Classification System

A2.1 Both welding electrodes and rods are classified upon the basis of the chemical composition of the aluminum filler metal and a usability test. The AWS classifications used in this specification are based as follows:

A2.2 The Aluminum Association alloy designation nomenclature is used for the numerical portion to identify the alloy and thus its registered chemical composition.

A2.3 A letter prefix designates usability of the filler metal. The letter system for identifying the filler metal classifications in this specification follows the standard pattern used in other AWS filler metal specifications. The prefix "E" indicates the filler metal is suitable for use as an electrode and the prefix "R" indicates suitability as welding rod. Since some of these filler metals are used as electrodes in gas metal arc welding, and as welding rods in oxyfuel gas, gas tungsten arc, and plasma arc welding, both letters, "ER," are used to indicate suitability as an electrode or a rod. In all cases, a product which meets the test requirements for an electrode in this specification, that meets the test requirements for a welding rod, must also pass the test for an electrode before being classified as an electrode.

A2.4 An international system for designating welding filler metals is under development by the International Institute of Welding (IIW) for use in future specifications to be issued by the International Standards Organization (ISO). Table A1 shows the proposed designations for aluminum filler metals. In that system, the initial "S" designates a solid wire or rod, the letter "A" the alloy system, followed by a four-digit number. For aluminum alloys, the four-digit number is the same as that commonly recognized worldwide, except for the cast rods, which adopt the first four digits of the UNS number (see Table A1).

A2.5 Minor changes in procedures used in the manufacture of aluminum filler metals can affect their surface quality and significantly affect the resultant weld soundness. Usability testing of the electrode is desirable on a periodic basis to assure that the product classified in this specification continues to meet the soundness requirement.

The supplier should perform the usability tests of this specification on an annual basis, as a minimum, to assure that the specified soundness and operating characteristics criteria are maintained. ANSI/AWS A5.01, *Filler Metal Procurement Guidelines*, should be used by a purchaser for definition of lot and frequency of testing references when purchasing aluminum filler metals.

A3. Acceptance

Acceptance of all welding materials classified under this specification is in accordance with ANSI/AWS

TABLE A1 DESIGNATION REFERENCE GUIDE

AWS Composition Designation[a]	UNS Number	Proposed ISO Designation[b]	Usability Test Designation	AWS Classification Number[c]	ISO Number + Usability Designation[d]
1100	A91100	SA1100	ER	ER1100	ER SA1100
			R	R1100	R SA1100
1188	A91188	SA1188	ER	ER1188	ER SA1188
			R	R1188	R SA1188
2319	A92319	SA2319	ER	ER2319	ER SA2319
			R	R2319	R SA2319
4009	A94009	SA4009	ER	ER4009	ER SA4009
			R	R4009	R SA4009
4010	A94010	SA4010	ER	ER4010	ER SA4010
			R	R4010	R SA4010
4011	A94011	SA4011	R	R4011	R SA4011
4043	A94043	SA4043	ER	ER4043	ER SA4043
			R	R4043	R SA4043
4047	A94047	SA4047	ER	ER4047	ER SA4047
			R	R4047	R SA4047
4145	A94145	SA4145	ER	ER4145	ER SA4145
			R	R4145	R SA4145
4643	A94643	SA4643	ER	ER4643	ER SA4643
			R	R4643	R SA4643
5183	A95183	SA5183	ER	ER5183	ER SA5183
			R	R5183	R SA5183
5356	A95356	SA5356	ER	ER5356	ER SA5356
			R	R5356	R SA5356
5554	A95554	SA5554	ER	ER5554	ER SA5554
			R	R5554	R SA5554
5556	A95556	SA5556	ER	ER5556	ER SA5556
			R	R5556	R SA5556
5654	A95654	SA5654	ER	ER5654	ER SA5654
			R	R5654	R SA5654
206.0	A02060	SA0206	R	R206.0	R SA0206
C355.0	A33550	SA3355	R	R-C355.0	R SA3355
A356.0	A13560	SA1356	R	R-A356.0	R SA1356
357.0	A03570	SA0357	R	R357.0	R SA0357
A357.0	A13570	SA1357	R	R-A357.0	R SA1357

NOTES:
a. AWS chemical composition designation number is the same as the Aluminum Association designation number.
b. The proposed ISO designation number contains the last four digits of the UNS number for wrought alloys (IIW doc. XII-1232-91). For cast alloys the first four digits of the UNS number are herein proposed for ISO designations.
c. The AWS classification number is a combination of AWS chemical composition designation plus AWS usability test designation.
d. The AWS usability test designation is applied as a prefix to the ISO designation.

A5.01, *Filler Metal Procurement Guidelines*, as the specification states. Any testing a purchaser requires of the supplier, for material shipped in accordance with this specification, shall be clearly stated in the purchase order, according to the provisions of ANSI/AWS A5.01, *Filler Metal Procurement Guidelines*. In the absence of any such statement in the purchase order, the supplier may ship the material with whatever testing the supplier normally conducts on material of that classification, as specified in Schedule F, Table 1, of ANSI/AWS A5.01, *Filler Metal Procurement Guidelines*. Testing in accordance with any other Schedule in that Table must be specifically required by the purchase order. In such cases, acceptance of the material shipped will be in accordance with those requirements.

A4. Certification

The act of placing the AWS specification and classification designations on the packaging enclosing the product or the classification on the product itself, constitutes the supplier's (manufacturer's) certification that the product meets all of the requirements of the specification.

The only testing requirement implicit in this certification is that the manufacturer has actually conducted the tests required by the specification on material that is representative of that being shipped and that the material met the requirements of the specification. Representative material, in this case, is any production run of that classification using the same formulation. "Certification" is not to be construed to mean that tests of any kind were necessarily conducted on samples of the specific material shipped. Tests on such material may or may not have been made. The basis for the certification required by the specification is the classification test of representative material cited above and the "Manufacturer's Quality Assurance Program" in ANSI/AWS A5.01, *Filler Metal Procurement Guidelines*.

A5. Application of Military and Federal Specifications

At the time of cancellation (June 7, 1982) of Military Specification MIL-E-16053L, Amendment 2 (October 20, 1980), *Electrodes, Welding, Bare, Aluminum Alloys*, the technical requirements were identical to those of AWS A5.10-80. They both covered the same aluminum alloys, compositions, welding tests, and radiographic standards. The MIL-E-16053L cancellation notice canceled the Qualified Products List QPL-16053 as well as the specification and stated, "Future acquisition of replacement electrodes should be made under ANSI/AWS A5.10-80, *Aluminum and Aluminum Alloy Bare Welding Rods and Electrodes*."

Federal Specification QQ-R-566B, *Rods and Electrodes, Welding, Aluminum, and Aluminum Alloys*, was technically the same as AWS A5.10 when it was issued July 5, 1973, and was in the process of being updated at the time of the MIL-E-16053L cancellation. On November 29, 1982, Federal Specification QQ-R-566B was also canceled with the recommendation, "The ANSI/AWS Standard A5.10, latest issue in effect, concerning Aluminum Alloy Bare Welding Rods and Electrodes should be used." Straight length, coiled, and spooled rod for oxyfuel gas and gas tungsten arc welding were included in QQ-R-566B, as well as the spooled electrode for gas metal arc welding. Thus the total coverage was the same as ANSI/AWS A5.10.

AWS A5.10/A5.10M is a classification document, which defines tests and acceptance criteria to determine that the product meets the requirements for classification. These tests need to be repeated only if a significant change is made in the manufacturing process. These tests become a part of the specific procurement only when used in combination with ANSI/AWS A5.01, *Filler Metal Procurement Guidelines*, which identifies lot classifications, level of testing, and the frequency of tests.

To order the specific tests previously required by MIL-E-16053L and QQ-R-566B specifications, the following Lot Classification and Level of Testing defined in ANSI/AWS A5.01 document apply:

Lot Definition	ANSI/AWS A5.01 Lot Classification
A lot consists of bare solid electrodes or rods, not exceeding 100,000 lb (45 000 kg) of one classification, size, form, and temper identified by controlled chemical composition	Class S2

Tests	Level of Testing Schedule
a. Conformance to chemical compo sition limits	Sch. H, I, or J
b. Welding tests upon the lot shipped	Sch. I or J
c. Visual Examination, diameters and finish	A5.10 Requirement
d. Filler wire tension test	Identify as part of Sch. K

The minimum tensile requirement for the test shall be as agreed upon between the supplier and purchaser.

A5.1 Purchase Order Information. In addition to stating the AWS classification, AWS Specification (A5.10), diameter, form, and quantity, the purchase order should state that the material is to conform to ANSI/AWS A5.01, Lot Class S2, Schedule K. Schedule K must be stated to be, "Schedule J plus tension tests of the filler wire for each lot of 2000 lb [900 kg] supplied." When referencing level of testing Schedules I or J, certification of performance to the chemical composition limits and acceptable welding test results will be supplied. Quantitative results of the tension test can be requested on the purchase order.

A6. Ventilation During Welding

A6.1 Five major factors govern the quantity of fumes in the atmosphere to which welders and welding operators are exposed during welding:

(a) Dimensions of the space in which welding is done (with special regard to the height of the ceiling)

(b) Number of welders and welding operators working in that space

(c) Rate of evolution of fumes, gases, or dust, according to the materials and processes involved

(d) The proximity of the welder or welding operator to the fumes as they issue from the welding zone, and to the gases and dusts in the space in which the welder or welding operator is working

(e) The ventilation provided to the space in which the welding is done.

A6.2 ANSI Z49.1, *Safety in Welding, Cutting, and Allied Processes*, published by the American Welding Society, discusses the ventilation that is required during welding and should be referred to for details. Attention is drawn particularly to the sections of that document covering Ventilation and Confined Spaces.

A7. Welding Considerations

The electrodes and rods described in this specification are primarily for use with the inert gas arc welding processes. However, they may be used with other welding processes such as electron beam or oxyfuel gas welding.

A7.1 The gas metal arc process permits the successful welding of aluminum alloys that are crack-sensitive when welded by oxyfuel gas or other manual welding processes. The reasons for this might be described briefly as follows.

Distortion is reduced to a minimum because the increase in temperature of the parts being welded is confined to a narrow zone. Because the aluminum alloys have high thermal conductivity, the reduction of distortion is greater than would be the case with ferrous base metals. Cracking of welds in the aluminum alloys is reduced if the cooling rate is high.

The gas metal arc process permits the welding of alloys that have a wide melting range, which heretofore have been difficult to weld without cracking.

A7.2 The high melting and solidification rate of the weld metal from the gas metal arc process can result in entrapped gas in the welds. Control of this factor should be understood to obtain good results. Gas in the welds can be caused by contaminating influences, such as grease, hydrocarbon cleaning agents, or moisture on the electrode or on the base metal. Moist air leaking into the inert gas lines may also cause this condition. Improper adjustment of electrode speed, welding current, or other machine variables may have a similar effect. The introduction of gas in the weld metal from any of these causes can result in porosity, because the solidification rate is high and the gas may not have time to escape before the molten metal solidifies.

A7.3 Welds can be made in all positions with the gas metal arc process. Edge preparation similar to that used for gas tungsten arc welding is satisfactory. Either argon or helium, or mixtures of these gases may be used as shielding. Semiautomatic welding, in which the welding gun is moved by a welder, is difficult to control on metal thicknesses below 0.08 in. [2 mm] with constant amperage. The use of a pulsed power supply permits the welding of base metal as thin as 0.03 in. [0.8 mm]. No upper limit on metal thickness has been established. Welds in plate up to 8 in. [200 mm] in thickness have been made. Automatic gas metal arc welding is suitable for all thicknesses welded, and particularly for 1/8 in. [3.2 mm] or less in thickness.

A7.4 Gas metal arc welding is done with direct current (electrode positive). Almost all drooping volt-ampere characteristic DC motor-generator sets and DC rectifier welding machines used for shielded metal arc welding with covered electrodes are suitable sources of power.

Constant-voltage power supplies are also suitable. An electrode feeding mechanism, in which electrode speed can be adjusted between 50 and 500 in./min. [21 and 210 mm/s] is needed. Electrode feeders possessing "touch-start" or "slow run-in" features, or both, are necessary when using a drooping volt-amperage charac-

teristic power supply, and are desirable with constant-voltage power sources.

Radiused top and bottom electrode feed rolls are preferred in both manual and mechanized equipment. Stabilization of the arc with high-frequency current is not required.

A7.5 Gas tungsten arc welds can be made in all positions. Welding travel speed is reduced compared to GMA welding; however, this is beneficial in several aspects. The process is more maneuverable for manually welding small tubes or piping than GMAW; entrapment of gases is minimized to permit production of sound welds; short repair welds can be made more easily; and the reduced concentration of heat input allows welding aluminum base metal thicknesses as thin as 0.02 in. [0.5 mm] or less. Corner and edge joints in sheet gauges can be made more satisfactorily than with GMAW due to the better control of the filler metal additions.

A7.6 Gas tungsten arc welds are most commonly made with alternating-current power and argon (AWS A5.32/A5.32M Class SG-A) gas shielding. Helium (AWS A5.32/A5.32M Class SG-He) additions to the extent of 25 to 50 percent of the mixture with argon are used to increase the rate of initial melting and the amount of melting in thick base metal. Pure tungsten (AWS A5.12/A5.12M Class EWP or zirconia-tungsten (AWS A5.12/A5.12M Class EWZr-1) electrodes are preferred for AC-GTAW. The positive electrode polarity of the AC power provides an arc cleaning action to remove the surface oxide; however, thick aluminum oxides caused by weathering, thermal treatments, or anodic treatments need to be reduced by chemical or mechanical means prior to welding to obtain uniform results and proper fusion. As stated in A7.2, sources of hydrogen, such as moisture on the base or filler metals or in the gas shielding and residual hydrocarbons on the base or filler metals, must be removed to avoid porosity in the welds.

A7.7 Direct current power can also be used to GTA weld aluminum. DCEP power can be used to weld sheet gauges; however, a 1/4 in. [6.40 mm] diameter tungsten electrode is required to carry the 125 amperes needed to weld 1/8 in. [3.2 mm] thickness, so this polarity is seldom used. DCEN power is used with helium (AWS A5.32/A5.32M Class SG-He) gas shielding and a thoriatungsten electrode for welding aluminum-base alloys. This negative electrode polarity provides a deep, narrow melting pattern, which is advantageous for repair of thick weldments or castings and for increased welding speeds in all thicknesses. Higher as-welded strength is obtained with DCEN-GTA welds in the heat treatable aluminum alloys due to the reduced heat input compared to AC-GTAW.

Since no arc cleaning action occurs in the DCEN arc, special attention must be given to minimizing the oxide thickness immediately before welding, such as mechanical scraping or arc cleaning all base metal surfaces within the fusion zone.

A8. Description and Intended Use of Aluminum Electrodes and Rods

A8.1 The selection of the proper classification of filler metal depends primarily on the aluminum alloy used in the parts to be welded; and secondly on the welding process, the geometry of the joints, the resistance to corrosion required in service, and on the finish or appearance desired on the welded part. For example, welded vessels for holding hydrogen peroxide require special aluminum alloys, quite frequently a high-purity alloy, in order to have good resistance to corrosion or to prevent contamination of the product contained. In this case, the proper choice of filler metal is an alloy that has at least as high a purity as the base metal. Another example is the foundry welding of castings, where an alloy meeting the composition limits of the castings is, in most cases, the best choice; for example, as in the repair and fabrication of cast alloys including 206.0, C355.0, A356.0, 357.0, and A357.0.

A8.2 Experience has shown that certain classifications of filler metal are suitable for welding specific base metals and combinations of base metals. These are listed in Table A2. If it is desired to weld other combinations than those listed, they should be evaluated as to suitability for the purpose intended. The alloy combinations listed will be suitable for most environments; some are preferable from one or more standpoints. In the absence of specific information, consultation with the material supplier is recommended. Additional information may be found in the aluminum chapter of *Welding Handbook*, Volume 3, Eighth Edition.

A8.3 Filler metal in the form of straight lengths and coils without support is used as welding rod with a number of welding processes. These include oxyfuel gas welding, plasma arc welding, and gas tungsten arc welding. The filler metal is usually fed by hand, although mechanized welding in these processes may involve either manual feeding of the welding rod or use of a feeding mechanism.

TABLE A2
GUIDE TO THE CHOICE OF FILLER METAL FOR GENERAL PURPOSE WELDING

Base Metal	201.0, 206.0, 224.0	319.0, 333.0, 354.0, 355.0, C355.0	356.0, A356.0, 357.0, A357.0, 413.0, 443.0, A444.0	511.0, 512.0, 513.0, 514.0, 535.0	7004, 7005, 7039, 710.0, 712.0	6009, 6010, 6070	6005, 6061, 6063, 6101, 6151, 6201, 6351, 6951	5456	5454
1060, 1070, 1080, 1350	ER4145	ER4145	ER4043[a,b]	ER5356[c,d]	ER5356[c,d]	ER4043[a,b]	ER4043[b]	ER5356[d]	ER4043[b,d]
1100, 3003, Alc 3003	ER4145	ER4145	ER4043[a,b]	ER5356[c,d]	ER5356[c,d]	ER4043[a,b]	ER4043[b]	ER5356[d]	ER4043[b,d]
2014, 2036	ER4145[e]	ER4145[e]	ER4145	—	—	ER4145	ER4145	—	—
2219	ER2319[a]	ER4145[e]	ER4145[b,c]	ER4043	ER4043	ER4043[a,b]	ER4043[a,b]	—	ER4043[b]
3004, Alc 3004	—	ER4043[b]	ER4043[b]	ER5356[f]	ER5356[f]	ER4043[b]	ER4043[b,f]	ER5356[d]	ER5356[f]
5005, 5050	—	ER4043[b]	ER4043[b]	ER5356[f]	ER5356[f]	ER4043[b]	ER4043[b,f]	ER5356[d]	ER5356[f]
5052, 5652[i]	—	ER4043[b]	ER4043[f]	ER5356[f]	ER5356[f]	ER4043[b]	ER5356[c,f]	ER5356[f]	ER5356[f]
5083	—	—	ER5356[c,d]	ER5356[d]	ER5183[d]	—	ER5356[d]	ER5183[d]	ER5356[d]
5086	—	—	ER5356[c,d]	ER5356[d]	ER5356[d]	—	ER5356[d]	ER5356[d]	ER5356[d]
5154, 5254[i]	—	—	ER4043[f]	ER5356[f]	ER5356[f]	—	ER5356[f]	ER5356[f]	ER5356[f]
5454	—	ER4043[b]	ER4043[f]	ER5356[f]	ER5356[f]	ER4043[b]	ER5356[c,f]	ER5356[f]	ER5554[c,f]
5456	—	—	ER5356[c,d]	ER5356[d]	ER5556[d]	—	ER5356[d]	ER5556[d]	
6005, 6061, 6063, 6101, 6151, 6201, 6351, 6951	ER4145	ER4145[b,c]	ER4043[b,f,g]	ER5356[f]	ER5356[c,f]	ER4043[a,b,g]	ER4043[b,f,g]		
6009, 6010, 6070	ER4145	ER4145[b,c]	ER4043[a,b,g]	ER4043	ER4043	ER4043[a,b,g]			
7004, 7005, 7039, 710.0, 712.0	—	ER4043[b]	ER4043[b,f]	ER5356[f]	ER5356[d]				
511.0, 512.0, 513.0, 514.0, 535.0	—	—	ER4043[f]	ER5356[f]					
356.0, A356.0, 357.0, A357.0, 413.0, 443.0, A444.0	ER4145	ER4145[b,c]	ER4043[b,h]						
319.0, 333.0, 354.0, 355.0, C355.0	ER4145[c]	ER4145[b,c,h]							
201.0, 206.0, 224.0	ER2319[a,h]								

(Continued)

TABLE A2 (CONT'D)
GUIDE TO THE CHOICE OF FILLER METAL FOR GENERAL PURPOSE WELDING

Base Metal	5154 5254[i]	5086	5083	5052 5652[i]	5005 5050	3004 Alc. 3004	2219	2014 2036	1100 3003 Alc. 3003	1060 1070 1080 1350
1060, 1070, 1080, 1350	ER5356[c,d]	ER5356[d]	ER5356[d]	ER4043[b,d]	ER1100[b,c]	ER4043[b,d]	ER4145[b,c]	ER4145	ER1100[b,c]	ER1188[b,c,h,j]
1100, 3003, Alc 3003	ER5356[c,d]	ER5356[d]	ER5356[d]	ER4043[b,d]	ER1100[b,c]	ER4043[b,d]	ER4145[b,c]	ER4145	ER1100[b,c]	
2014, 2036	—	—	—	—	ER4145	ER4145	ER4145[e]	ER4145[e]		
2219	ER4043	—	—	ER4043[b]	ER4043[a,b]	ER4043[a,b]	ER2319[a]			
3004, Alc 3004	ER5356[f]	ER5356[d]	ER5356[d]	ER5356[c,f]	ER5356[c,f]	ER5356[c,f]				
5005, 5050	ER5356[f]	ER5356[d]	ER5356[d]	ER5356[c,d]	ER5356[c,f]					
5052, 5652[i]	ER5356[f]	ER5356[d]	ER5356[d]	ER5654[c,f,i]						
5083	ER5356[d]	ER5356[d]	ER5183[d]							
5086	ER5356[d]	ER5356[d]								
5154, 5224[i]	ER5654[f,i]									

GENERAL NOTES:

1. Service conditions such as immersion in fresh or salt water, exposure to specific chemicals, or a sustained high temperature (over 150°F (66°C)) may limit the choice of filler metals. Filler metals ER5183, ER5356, ER5556, and ER5654 are not recommended for sustained elevated temperature service.
2. Recommendations in this table apply to gas shielded arc welding processes. For oxyfuel gas welding, only ER1188, ER1100, ER4043, ER4047, and ER4145 filler metals are ordinarily used.
3. Where no filler metal is listed, the base metal combination is not recommended for welding.

NOTES:

a. ER4145 may be used for some applications.
b. ER4047 may be used for some applications.
c. ER4043 may be used for some applications.
d. ER5183, ER5356, or ER5556 may be used.
e. ER2319 may be used for some applications. It can supply high strength when the weldment is postweld solution heat treated and aged.
f. ER5183, ER5356, ER5554, ER5556, and ER5654 may be used. In some cases, they provide: (1) improved color match after anodizing treatment, (2) highest weld ductility, and (3) higher weld strength. ER5554 is suitable for sustained elevated temperature service.
g. ER4643 will provide high strength in ½ in. (12 mm) and thicker groove welds in 6XXX base alloys when postweld solution heat treated and aged.
h. Filler metal with the same analysis as the base metal is sometimes used. The following wrought filler metals possess the same chemical composition limits as cast filler alloys: ER4009 and R4009 as R-C355.0; ER4010 and R4010 as R-A356.0; and R4011 as R-A357.0.
i. Base metal alloys 5254 and 5652 are used for hydrogen peroxide service. ER5654 filler metal is used for welding both alloys for service temperatures below 150°F (66°C).
j. ER1100 may be used for some applications.

A8.4 Spooled filler metal is used most commonly as electrode for the gas metal arc welding process. It also is used as filler rod when mechanized feeding systems are employed for gas tungsten arc, plasma-arc welding, and other processes. Finite lengths of filler metal can be removed from the spools for use as a high-quality, hand-fed filler rod with manual gas tungsten arc, plasma-arc, or oxyfuel gas welding processes.

A8.5 The cleanliness and minimal surface oxidation of the filler metal are important with all welding processes. Oil, or other organic materials, as well as a heavy oxide film on the rod, will interfere with coalescence of the weld and also are sources of porosity. Because of this, it is necessary to clean the welding rod and electrode before packaging.

A8.6 Proper storage of welding rods and electrodes is essential to avoid contamination which may affect their performance. Packages of filler metal should not be left outdoors or in unheated buildings because the greater variations in temperature and humidity increase the possibility of condensation to create hydrated surface oxides. Experience has demonstrated that undesirable storage conditions may adversely affect filler metal performance. Investigation of the effect of storage time on electrode performance indicates that packaged electrodes, stored under good conditions (dry places in heated buildings), are satisfactory after extended storage.

A8.7 Contamination of filler metal from handling or storage may occur. In most cases, the contaminating influences will dictate the cleaning method. The practice of giving the welding rod, if it has been exposed to the shop atmosphere for long periods of time, a rub with stainless steel wool just before welding is quite widely followed.

A9. Special Tests

This specification classifies those aluminum and aluminum-alloy filler metals used most extensively at the time of issuance of the specification. It is recognized that supplementary tests may be necessary to determine the suitability of these welding electrodes and rods for applications involving properties not considered in this specification. In such cases, additional tests to determine such specific properties as corrosion resistance, mechanical properties at high and low temperature, wear resistance, and suitability for welding combinations of dissimilar metals may need to be conducted.

A10. Chemical Analysis

The most widely used method for chemical analysis is ASTM E 227, *Optical Emission Spectrometric Analysis of Aluminum and Aluminum Alloy by the Point-to-Plane Technique*, but other established analytical methods are acceptable. The ASTM E 227 method analyzes a bulk sample and all elements simultaneously. The ASTM E 34 tests methods are used as a referee method if a dispute arises concerning a specific element analysis.

A11. Discontinued and Replaced Alloys

Compositions of aluminum alloy welding electrodes and rods have been discontinued and/or replaced as new editions of A5.10 have been issued (see Table A3).

A12. General Safety Considerations

A12.1 Burn Protection. Molten metal, sparks, slag, and hot work surfaces are produced by welding, cutting, and allied processes. These can cause burns if precautionary measures are not used. Workers should wear protective clothing made of fire-resistant material. Pant cuffs, open pockets, or other places on clothing that can catch and retain molten metal or sparks should not be worn. High-top shoes or leather leggings and fire-resistant gloves should be worn. Pant legs should be worn over the outside of high-top shoes. Helmets or hand shields that provide protection for the face, neck, and ears, and a head covering to protect the head should be used. In addition, appropriate eye protection should be used.

When welding overhead or in confined spaces, ear plugs to prevent weld spatter from entering the ear canal should be worn. Goggles or equivalent should also be worn to protect eyes. Clothing should be kept free of grease and oil. Combustible materials should not be carried in pockets. If any combustible substance has been spilled on clothing, a change to clean, fire-resistant clothing should be made before working with open arcs or flame. Aprons, cape-sleeves, leggings, and shoulder covers with bibs designed for welding service should be used.

Where welding or cutting of unusually thick base metal is involved, sheet metal shields should be used for extra protection. Mechanization of highly hazardous processes or jobs should be considered. Other personnel in the work area should be protected by the use of noncombustible screens or by the use of appropriate protection as described in the previous paragraph. Before leaving a work area, hot work pieces should be marked

TABLE A3
DISCONTINUED BARE ALUMINUM AND ALUMINUM-ALLOY WELDING ELECTRODES AND RODS

Discontinued		Replacement	
AWS Classification	A5.10 Issue	AWS Classification	A5.10 Issue
ER1060	1961	...	...
ER1260	1980	ER1188	1988
ER2014	1961	...	...
ER3004	1961	...	...
ER5039	1980	...	...
ER5052	1967	...	...
ER5154	1969	ER5654	1969
ER5254	1969	ER5654	1969
ER5652	1969	ER5654	1969
R242.0	1988	...	...
R295.0	1988	...	...
R355.0	1988	R-C355.0	1988
		ER4009 & R4009	1992
R356.0	1988	R-A356.0	1988
		ER4010 & R4010	1992
R-990A	1957	ER1100	1992
E-990A	1957	ER1100	1992
R-996A	1957	ER1060	1957
E-996A	1957	ER1060	1957
R-C4A	1980	R295.0	1980
R-CN42A	1980	R242.0	1980
R-C541A	1957	ER2014	1957
E-C541A	1957	ER2014	1957
R-G1A	1961	...	...
E-G1A	1961	...	...
R-GM50A	1957	ER5356	1957
E-GM50A	1957	ER5356	1957
R-GR20A	1957	ER5052	1957
E-GR20A	1957	ER5052	1957
R-GR40A	1957	ER5154	1957
E-GR40A	1957	ER5154	1957
R-MG11A	1957	ER3004	1957
E-MG11A	1957	ER3004	1957
R-SG70A	1980	R356.0	1980

to alert other persons of this hazard. No attempt should be made to repair or disconnect electrical equipment when it is under load. Disconnection under load produces arcing of the contacts that may cause burns or shock, or both. (Note: Burns can be caused by touching hot equipment such as electrode holders, tips, and nozzles. Therefore, insulated gloves should be worn when these items are handled, unless an adequate cooling period has been allowed before touching.)

The following sources are for more detailed information on personal protection:

(a) ANSI Z49.1, *Safety in Welding, Cutting, and Allied Processes*, published by the American Welding Society, 550 N.W. LeJeune Road, Miami, FL 33126.

(b) Code of Federal Regulations, Title 29 Labor, Chapter XVII, Part 1910, OSHA General Industry Standards, available from the U.S. Government Printing Office, Washington, DC 20402.

(c) ANSI/ASC Z87.1, *Practice for Occupational and Educational Eye and Face Protection*, American National Standards Institute, 11 W. 42nd Street, 13th Floor, New York, NY 10036.

(d) ANSI Z41, *American National Standard for Personal Protection–Protective Footwear*, American National Standards Institute, 11 W. 42nd Street, 13th Floor, New York NY 10036.

A12.2 Electrical Hazards. Electric shock can kill. However, it can be avoided. Live electrical parts should not be touched. The manufacturer's instructions and recommended safe practices should be read and understood. Faulty installation, improper grounding, and incorrect operation and maintenance of electrical equipment are all sources of danger.

The spool of electrode should be insulated from the welding equipment by an insulated spindle. All electrical equipment and the workpieces should be grounded. The workpiece lead is not a ground lead. It is used only to complete the welding circuit. A separate connection is required to ground the workpiece. The workpiece should not be mistaken for a ground connection.

The correct cable size should be used, since sustained overloading will cause cable failure and result in possible electrical shock or fire hazard. All electrical connections should be tight, clean, and dry. Poor connections can overheat and even melt. Further, they can produce hazardous arcs and sparks. Water, grease, or dirt should not be allowed to accumulate on plugs, sockets, or electrical units. Moisture can conduct electricity. To prevent shock, the work area, equipment, and clothing should be kept dry at all times. Welders should wear dry gloves and rubber-soled shoes, or stand on a dry board or insulated platform.

Cables and connections should be kept in good condition. Improper or worn electrical connections may create conditions that could cause electrical shock or short circuits. Worn, damaged, or bare cables should not be used. Open-circuit voltage should be avoided. When several welders are working with arcs of different polarities, or when a number of alternating-current machines are being used, the open-circuit voltages can be additive. The added voltages increase the severity of the shock hazard.

In case of electric shock, the power should be turned off. If the rescuer must resort to pulling the victim from the live contact, nonconducting materials should be used. If the victim is not breathing, cardiopulmonary resuscitation (CPR) should be administered as soon as contact with the electrical source is broken. A physician should be called and CPR continued until breathing has been restored, or until a physician has arrived. Electrical burns are treated as thermal burns; that is, clean, cold (iced) compresses should be applied. Contamination should be avoided; the area should be covered with a clean, dry dressing; and the patient should be transported to medical assistance.

Recognized safety standards such as ANSI Z49.1, *Safety in Welding, Cutting, and Allied Processes; National Electrical Code*; and NFPA No. 70, available from National Fire Protection Association, 1 Batterymarch Park, Quincy, MA 02269, should be followed.

A12.3 Fumes and Gases. Many welding, cutting, and allied processes produce fumes and gases which may be harmful to health. Fumes are solid particles which originate from welding filler metals and fluxes, the base metal, and any coatings present on the base metal. Gases are produced during the welding process or may be produced by the effects of process radiation on the surrounding environment. Management, personnel, and welders alike should be aware of the effects of these fumes and gases. The amount and composition of these fumes and gases depend upon the composition of the filler metal and base metal, welding process, flux, current level, arc length, and other factors. Fluxes, used for oxyfuel gas welding of aluminum alloys, are composed primarily of chlorides plus small fluoride additions.

The possible effects of overexposure range from irritation of eyes, skin, and respiratory system to more severe complications. Effects may occur immediately or at some later time. Fumes can cause symptoms such as nausea, headaches, dizziness, and metal fume fever. The possibility of more serious health effects exists when especially toxic materials are involved. In confined spaces, the shielding gases and fumes might displace

breathing air and cause asphyxiation. One's head should always be kept out of the fumes. Sufficient ventilation, exhaust at the arc or flame, or both, should be used to keep fumes and gases from your breathing zone and the general area.

In some cases, natural air movement will provide enough ventilation. Where ventilation may be questionable, air sampling should be used to determine if corrective measures should be applied.

Forced ventilation or exhaust of the welding atmosphere is most desirable when gas metal arc welding with the ER5XXX series aluminum electrodes. The ER5XXX electrodes can create high concentrations of metallic particulates as evidenced by the smoky fumes when GMA welding with these electrodes.

All bare aluminum electrodes possess a compositional control of 0.0008 percent maximum beryllium content. This provides a check by the manufacturer that the filler metal is essentially free of this element and thus avoids the presence of concentrations of this highly toxic metallic particulate during the filler metal transfer across the arc. Since the spooled electrodes are all fabricated as drawn, wrought aluminum wire, the same beryllium control has been applied to all wrought filler metals covered by this ANSI/AWS A5.10 specification where beryllium is not stated as a range (as in R4011). Thus, all wrought aluminum rods except R4011 also possess a 0.0008 percent Be maximum limit.

When melting the filler metal in the weld pool, as in gas tungsten arc welding, instead of spraying the filler metal across an arc gap, the metallic particulates have been quite low when welding the aluminum alloys. Regardless of this fact however, when welding with R4011 or R-A357.0, which possess beryllium as a deliberately added element, the user should sample the atmosphere under the actual welding conditions to assure that a satisfactory environment exists.

More detailed information on fumes and gases produced by the various welding processes may be found in the following:

(a) The permissible exposure limits required by OSHA can be found in CFR Title 29, Chapter XVII Part 1910. The OSHA *General Industry Standards* are available from the Superintendent of Documents, U.S. Government Printing Office, Washington, DC 20402.

(b) The recommended threshold limit values for these fumes and gases may be found in *Threshold Limit Values for Chemical Substances and Physical Agents in the Workroom Environment*, published by the American Conference of Governmental Industrial Hygienists (ACGIH), 1330 Kemper Meadow Drive, Suite 600, Cincinnati, OH 45240-1634.

(c) The results of an AWS-funded study are available in a report entitled, *Fumes and Gases in the Welding Environment*, available from the American Welding Society, 550 N.W. LeJeune Road, Miami, FL 33126.

A12.4 Radiation. Welding, cutting, and allied operations may produce radiant energy (radiation) harmful to health. One should become acquainted with the effects of this radiant energy.

Radiant energy may be ionizing (such as X-rays), or nonionizing (such as ultraviolet, visible light, or infrared). Radiation can produce a variety of effects such as skin burns and eye damage, depending on the radiant energy's wavelength and intensity, if excessive exposure occurs.

A12.4.1 Ionizing Radiation. Ionizing radiation is produced by the electron beam welding process. It is ordinarily controlled within acceptance limits by use of suitable shielding enclosing the welding area.

A12.4.2 Nonionizing Radiation. The intensity and wavelengths of nonionizing radiant energy produced depend on many factors, such as the process, welding parameters, electrode and base metal composition, fluxes, and any coating or plating on the base metal. Some processes such as resistance welding and cold pressure welding ordinarily produce negligible quantities of radiant energy. However, most arc welding and cutting processes (except submerged arc when used properly), laser welding and torch welding, cutting, brazing, or soldering can produce quantities of nonionizing radiation such that precautionary measures are necessary.

Protection from possible harmful effects caused by nonionizing radiant energy from welding include the following measures:

(a) One should not look at welding arcs except through welding filter plates which meet the requirements of ANSI/ASC Z87.1, *Practice for Occupational and Education Eye and Face Protection*, published by American National Standards Institute, 11 W. 42nd Street, 13th Floor, New York, NY 10036. It should be noted that transparent welding curtains are not intended as welding filter plates, but rather are intended to protect passersby from incidental exposure.

(b) Exposed skin should be protected with adequate gloves and clothing as specified in ANSI Z49.1, *Safety in Welding, Cutting, and Allied Processes*, published by American Welding Society, 550 N.W. LeJeune Road, Miami, FL 33126.

(c) Reflections from welding arcs should be avoided, and all personnel should be protected from intense reflections. *(Note: Paints using pigments of substantially*

zinc oxide or titanium dioxide have a lower reflectance for ultraviolet radiation.)

(d) Screens, curtains, or adequate distance from aisles, walkways, etc., should be used to avoid exposing passersby to welding operations.

(e) Safety glasses with UV-protective side shields have been shown to provide some beneficial protection from ultraviolet radiation produced by welding arcs.

A12.4.3 Ionizing radiation information sources include:

(a) AWS F2.1-78, *Recommended Safe Practices for Electron Beam Welding and Cutting*, available from American Welding Society, 550 N.W. LeJeune Road, Miami, FL 33126.

(b) Manufacturer's product information literature.

A12.4.4 Nonionizing radiation information sources include:

(a) Hinrichs, J. F. Project Committee on Radiation-Summary Report. *Welding Journal*, January 1978.

(b) Nonionizing Radiation Protection Special Study No. 42-0053-77, *Evaluation of the Potential Hazards from Actinic Ultraviolet Radiation Generated by Electric Welding and Cutting Arcs*, available from the National Technical Information Service, Springfield, VA 22161, ADA-033768.

(c) Nonionizing Radiation Protection Special Study No. 42-0312-77, *Evaluation of the Potential Retina Hazards from Optical Radiation Generated by Electrical Welding and Cutting Arcs*, available from the National Technical Information Service, Springfield, VA 22161, ADA-043023.

(d) Moss, C. E., and Murray, W. E. "Optical Radiation Levels Produced in Gas Welding, Torch Brazing, and Oxygen Cutting." *Welding Journal*, September 1979.

(e) "Optical Radiation Levels Produced by Air-Carbon Arc Cutting Processes," *Welding Journal*, March 1980.

(f) ANSI Z136.1, *Safe Use of Lasers*, published by American National Standards Institute, 11 W. 42nd Street, 13th Floor, New York, NY 10036.

(g) ANSI Z49.1, *Safety in Welding, Cutting, and Allied Processes*, published by American Welding Society, 550 N.W. LeJeune Road, Miami, FL 33126.

(h) ANSI/ASC Z87.1, *Practice for Occupational and Educational Eye and Face Protection*, published by American National Standards Institute, 11 W. 42nd Street, 13th Floor, New York, NY 10036.

(i) Moss, C. E. "Optical Radiation Transmission Levels through Transparent Welding Curtains," *Welding Journal*, March 1979.

SPECIFICATION FOR NICKEL AND NICKEL-ALLOY WELDING ELECTRODES FOR SHIELDED METAL ARC WELDING

SFA-5.11

(Identical with AWS Specification A5.11/A5.11M-97.)

1. Scope

This specification prescribes requirements for the classification of nickel and nickel-alloy covered electrodes for shielded metal arc welding. It includes those compositions in which the nickel content exceeds that of any other element.[1]

PART A — GENERAL REQUIREMENTS

2. Normative References

2.1 The following ANSI/AWS standards[2] are referenced in the mandatory sections of this document:

(a) ANSI/AWS A1.1, *Metric Practice Guide for the Welding Industry*

(b) ANSI/AWS A5.01, *Filler Metal Procurement Guidelines*

(c) ANSI/AWS B4.0, *Standard Methods for Mechanical Testing of Welds*

2.2 The following ASTM and ISO standards[3] are referenced in the mandatory sections of this document:

(a) ASTM A 131/A 131M, *Standard Specification for Structural Steel for Ships*

(b) ASTM A 240/A 240M, *Standard Specification for Heat-Resisting Chromium and Chromium-Nickel Stainless Steel Plate, Sheet, and Strip for Pressure Vessels*

(c) ASTM A 285/A 285M, *Standard Specification for Pressure Vessel Plates, Carbon Steel, Low- and Intermediate-Tensile Strength*

(d) ASTM A 515/A 515M, *Standard Specification for Pressure Vessel Plates, Carbon Steel, for Intermediate- and Higher-Temperature Service*

(e) ASTM B 127, *Standard Specification for Nickel-Copper Alloy (UNS N04400) Plate, Sheet, and Strip*

(f) ASTM B 160, *Standard Specification for Nickel Rod and Bar*

(g) ASTM B 162, *Standard Specification for Nickel Plate, Sheet, and Strip*

(h) ASTM B 164, *Standard Specification for Nickel-Copper Alloy Rod, Bar, and Wire*

(i) ASTM B 166, *Standard Specification for Nickel-Chromium-Iron Alloys (UNS N06600, N06601, N06690, N06025, and N06045) and Nickel-Chromium-Cobalt-Molybdenum Alloy (UNS N06617) Rod, Bar, and Wire*

(j) ASTM B 167, *Standard Specification for Nickel-Chromium-Iron Alloys (UNS N06600, N06601, N06690, N06025, and N06045) Seamless Pipe and Tube*

(k) ASTM B 168, *Standard Specification for Nickel-Chromium-Iron Alloys (UNS N06600, N06601, N06690, N06025, and N06045) and Nickel-Chromium-Cobalt-Molybdenum Alloy (UNS N06617) Plate, Sheet, and Strip*

(l) ASTM B 333, *Standard Specification for Nickel-Molybdenum Alloy Plate, Sheet, and Strip*

(m) ASTM B 435, *Standard Specification for UNS N06002, UNS N06230, UNS N12160, and UNS R30556 Plate, Sheet, and Strip*

---

[1] Nickel-base covered electrodes for welding cast irons are treated separately in ANSI/AWS A5.15, *Specification for Welding Electrodes and Rods for Cast Iron.* This specification is available from the American Welding Society, 550 N.W. LeJeune Road, Miami, FL 33126.

[2] AWS standards can be obtained from the American Welding Society, 550 N.W. LeJeune Road, Miami, FL 33126.

[3] ASTM standards can be obtained from the American Society for Testing and Materials, 100 Barr Harbor Drive, West Conshohocken, PA 19428-2959. ISO standards are available from American National Standards Institute, ANSI, 11 West 42nd Street, 13th Floor, New York, NY 10036.

(n) ASTM B 443, *Standard Specification for Nickel-Chromium-Molybdenum-Columbium Alloy (UNS N06625) Plate, Sheet, and Strip*

(o) ASTM B 446, *Standard Specification for Nickel-Chromium-Molybdenum-Columbium Alloy (UNS N06625) Rod and Bar*

(p) ASTM B 575, *Standard Specification for Low-Carbon Nickel-Molybdenum-Chromium, Low-Carbon Nickel-Chromium-Molybdenum, and Low-Carbon Nickel-Chromium-Molybdenum-Tungsten Alloy Plate, Sheet, and Strip*

(q) ASTM B 582, *Standard Specification for Nickel-Chromium-Iron-Molybdenum-Copper Alloy Plate, Sheet, and Strip*

(r) ASTM E 29, *Standard Practice for Using Significant Digits in Test Data to Determine Conformance with Specifications*

(s) ASTM E 38, *Standard Methods for Chemical Analysis of Nickel-Chromium and Nickel-Chromium-Iron Alloys*

(t) ASTM E 76, *Standard Methods for Chemical Analysis of Nickel-Copper Alloys*

(u) ASTM E 142, *Methods for Controlling Quality of Radiographic Testing*

(v) ISO 544, *Filler Metals for Manual Welding — Size Requirements*

3. Classification

3.1 The welding electrodes covered by the A5.11/A5.11M specification are classified using a system that is independent of U.S. Customary Units and the International System of Units (SI). Classification is according to the chemical composition of their undiluted weld metal, as specified in Table 1.

3.2 Electrodes classified under one classification shall not be classified under any other classification in this specification.

4. Acceptance

Acceptance[4] of the electrodes shall be in accordance with the provisions of ANSI/AWS A5.01, *Filler Metal Procurement Guidelines.*

[4] See Section A3, Acceptance (in the Annex), for further information concerning acceptance and testing of the material shipped, as well as ANSI/AWS A5.01, *Filler Metal Procurement Guidelines.*

5. Certification

By affixing the AWS specification and classification designation to the packaging, or the classification to the product, the manufacturer certifies that the product meets the requirements of this specification.[5]

6. Units of Measure and Rounding-Off Procedure

6.1 This specification makes use of both U.S. Customary Units and the International System of Units (SI). The measurements are not exact equivalents; therefore each system must be used independently of the other without combining values in any way. The specification with the designation A5.11 uses the U.S. Customary Units. Specification A5.11M uses SI Units. The latter are shown in appropriate columns in tables and in figures, and within brackets [] when used in the text.

6.2 For purposes of determining conformance with this specification, an observed or calculated value shall be rounded to the nearest 1000 psi [10 MPa] used in expressing the limiting value for other quantities in accordance with the rounding-off method given in ASTM E29, *Standard Practice for Using Significant Digits in Tests to Determine Conformance with Specifications.*

PART B — TESTS, PROCEDURES, AND REQUIREMENTS

7. Summary of Tests

The tests required for classification are specified in Table 2. The purpose of these tests is to determine the chemical composition, the mechanical properties and soundness of the weld metal, and the usability of the electrode. The base metal for the weld test assemblies, the welding and testing procedures to be employed, and the results required are given in Section 9, Weld Test Assemblies, through Section 13, Bend Test.

8. Retest

If the results of any test fail to meet the requirement, that test shall be repeated twice. The results of both retests shall meet the requirement. Specimens for retest may be taken from the original test assembly, or from one or two new test assemblies. For chemical analysis,

[5] See Section A4, Certification (in the Annex), for further information concerning certification and the testing called for to meet this requirement.

TABLE 1
CHEMICAL COMPOSITION REQUIREMENTS FOR UNDILUTED WELD METAL

AWS Classification	UNS Number[c]	Weight Percent[a,b]																
		C	Mn	Fe	P	S	Si	Cu	Ni[d]	Co	Al	Ti	Cr	Nb(Cb) Plus Ta	Mo	V	W	Other Elements Total
ENi-1	W82141	0.10	0.75	0.75	0.03	0.02	1.25	0.25	92.0 min.	—	1.0	1.0 to 4.0	—	—	—	—	—	0.50
ENiCu-7	W84190	0.15	4.0	2.5	0.02	0.015	1.5	Rem	62.0 to 69.0	—	0.75	1.0	—	—	—	—	—	0.50
ENiCrFe-1	W86132	0.08	3.5	11.0	0.03	0.015	0.75	0.50	62.0 min.	—	—	—	13.0 to 17.0	1.5 to 4.0[f]	—	—	—	0.50
ENiCrFe-2	W86133	0.10	1.0 to 3.5	12.0	0.03	0.02	0.75	0.50	62.0 min.	(e)	—	—	13.0 to 17.0	0.5 to 3.0[f]	0.5 to 2.5	—	—	0.50
ENiCrFe-3	W86182	0.10	5.0 to 9.5	10.0	0.03	0.015	1.0	0.50	59.0 min.	(e)	—	1.0	13.0 to 17.0	1.0 to 2.5[f]	—	—	—	0.50
ENiCrFe-4	W86134	0.20	1.0 to 3.5	12.0	0.03	0.02	1.0	0.50	60.0 min.	—	—	—	13.0 to 17.0	1.0 to 3.5	1.0 to 3.5	—	—	0.50
ENiCrFe-7	W86152	0.05	5.0	7.0 to 12.0	0.03	0.015	0.75	0.50	Rem	(e)	0.50	0.50	28.0 to 31.5	1.0 to 2.5	0.5	—	—	0.50
ENiCrFe-9	W86094	0.15	1.0 to 4.5	12.0	0.02	0.015	0.75	0.50	55.0 min.	—	—	—	12.0 to 17.0	0.5 to 3.0	2.5 to 5.5	—	1.5	0.50
ENiCrFe-10	W86095	0.20	1.0 to 3.5	12.0	0.02	0.015	0.75	0.50	55.0 min.	—	—	—	13.0 to 17.0	1.0 to 3.5	1.0 to 3.5	—	1.5 to 3.5	0.50
ENiMo-1	W80001	0.07	1.0	4.0 to 7.0	0.04	0.03	1.0	0.50	Rem	2.5	—	—	1.0	—	26.0 to 30.0	0.60	1.0	0.50

(Continued)

TABLE 1
CHEMICAL COMPOSITION REQUIREMENTS FOR UNDILUTED WELD METAL (CONT'D)

AWS Classification	UNS Number[c]	Weight Percent[a,b]																
		C	Mn	Fe	P	S	Si	Cu	Ni[d]	Co	Al	Ti	Cr	Nb(Cb) Plus Ta	Mo	V	W	Other Elements Total
ENiMo-3	W80004	0.12	1.0	4.0 to 7.0	0.04	0.03	1.0	0.50	Rem	2.5	—	—	2.5 to 5.5	—	23.0 to 27.0	0.60	1.0	0.50
ENiMo-7	W80665	0.02	1.75	2.25	0.04	0.03	0.2	0.50	Rem	1.0	—	—	1.0	—	26.0 to 30.0	—	1.0	0.50
ENiMo-8	W80008	0.10	1.5	10.0	0.02	0.015	0.75	0.50	60.0 min.	—	—	—	0.5 to 3.5	—	17.0 to 20.0	—	2.0 to 4.0	0.50
ENiMo-9	W80009	0.10	1.5	7.0	0.02	0.015	0.75	0.3 to 1.3	62.0 min.	—	—	—	—	—	18.0 to 22.0	—	2.0 to 4.0	0.50
ENiMo-10	W80675	0.02	2.0	1.0 to 3.0	0.04	0.03	0.2	0.50	Rem	3.0	—	—	1.0 to 3.0	—	27.0 to 32.0	—	3.0	0.50
ENiCrCoMo-1	W86117	0.05 to 0.15	0.3 to 2.5	5.0	0.03	0.015	0.75	0.50	Rem	9.0 to 15.0	—	—	21.0 to 26.0	1.0	8.0 to 10.0	—	—	0.50
ENiCrMo-1	W86007	0.05	1.0 to 2.0	18.0 to 21.0	0.04	0.03	1.0	1.5 to 2.5	Rem	2.5	—	—	21.0 to 23.5	1.75 to 2.50	5.5 to 7.5	—	1.0	0.50
ENiCrMo-2	W86002	0.05 to 0.15	1.0	17.0 to 20.0	0.04	0.03	1.0	0.50	Rem	0.50 to 2.50	—	—	20.5 to 23.0	—	8.0 to 10.0	—	0.2 to 1.0	0.50
ENiCrMo-3	W86112	0.10	1.0	7.0	0.03	0.02	0.75	0.50	55.0 min.	(e)	—	—	20.0 to 23.0	3.15 to 4.15	8.0 to 10.0	—	—	0.50
ENiCrMo-4	W80276	0.02	1.0	4.0 to 7.0	0.04	0.03	0.2	0.50	Rem	2.5	—	—	14.5 to 16.5	—	15.0 to 17.0	0.35	3.0 to 4.5	0.50

(Continued)

TABLE 1
CHEMICAL COMPOSITION REQUIREMENTS FOR UNDILUTED WELD METAL (CONT'D)

AWS Classification	UNS Number[c]	Weight Percent[a,b]																
		C	Mn	Fe	P	S	Si	Cu	Ni[d]	Co	Al	Ti	Cr	Nb(Cb) Plus Ta	Mo	V	W	Other Elements Total
ENiCrMo-5	W80002	0.10	1.0	4.0 to 7.0	0.04	0.03	1.0	0.50	Rem	2.5	—	—	14.5 to 16.5	—	15.0 to 17.0	0.35	3.0 to 4.5	0.50
ENiCrMo-6	W86620	0.10	2.0 to 4.0	10.0	0.03	0.02	1.0	0.50	55.0 min.	—	—	—	12.0 to 17.0	0.5 to 2.0	5.0 to 9.0	—	1.0 to 2.0	0.50
ENiCrMo-7	W86455	0.015	1.5	3.0	0.04	0.03	0.2	0.50	Rem	2.0	—	0.70	14.0 to 18.0	—	14.0 to 17.0	—	0.5	0.50
ENiCrMo-9	W86985	0.02	1.0	18.0 to 21.0	0.04	0.03	1.0	1.5 to 2.5	Rem	5.0	—	—	21.0 to 23.5	0.5	6.0 to 8.0	—	1.5	0.50
ENiCrMo-10	W86022	0.02	1.0	2.0 to 6.0	0.03	0.015	0.2	0.50	Rem	2.5	—	—	20.0 to 22.5	—	12.5 to 14.5	0.35	2.5 to 3.5	0.50
ENiCrMo-11	W86030	0.03	1.5	13.0 to 17.0	0.04	0.02	1.0	1.0 to 2.4	Rem	5.0	—	—	28.0 to 31.5	0.3 to 1.5	4.0 to 6.0	—	1.5 to 4.0	0.50
ENiCrMo-12	W86032[g]	0.03	2.2	5.0	0.03	0.02	0.7	0.50	Rem	—	—	—	20.5 to 22.5	1.0 to 2.8	8.8 to 10.0	—	—	0.50
ENiCrMo-13	W86059	0.02	1.0	1.5	0.015	0.01	0.2	—	Rem	—	—	—	22.0 to 24.0	—	15.0 to 16.5	—	—	0.50
ENiCrMo-14	W86026	0.02	1.0	5.0	0.02	0.02	0.25	0.50	Rem	—	—	0.25	19.0 to 23.0	—	15.0 to 17.0	—	3.0 to 4.4	0.50

NOTES:
a. The weld metal shall be analyzed for the specific elements for which values are shown in this table. If the presence of other elements is indicated in the course of the work, the amount of those elements shall be determined to ensure that their total does not exceed the limit specified for "Other Elements, Total" in the last column of the table.
b. Single values are maximum, except where otherwise specified. Rem = remainder.
c. ASTM/SAE Unified Numbering System for Metals and Alloys.
d. Includes incidental cobalt. Rem = remainder.
e. Cobalt — 0.12 maximum, when specified by the purchaser.
f. Tantalum — 0.30 maximum, when specified by the purchaser.
g. UNS number formerly was W86040.

TABLE 2
REQUIRED TESTS AND POSITIONS

AWS Classification	Electrode Diameter in.	Electrode Diameter mm	Required Tests: Chemical Analysis	Tension Test	Bend Test[b]	Radiographic Test	Position Radiographic Test[c,d]
ENi-1, ENiCrFe-1, ENiCrFe-2, ENiCrFe-3, ENiCrFe-4, ENiCrFe-7	5/64	2.0	Required	Required	Required	Required	V
	3/32	2.4[e]					
	—	2.5					
	1/8	3.2					
ENiCrFe-9, ENiCrFe-10, ENiCrMo-3, ENiCrMo-6, ENiCrMo-10, ENiCrMo-14, ENiCu-7	5/32	4.0	Required	Required	Required	Required	F
	3/16	4.8[e]					
	—	5.0					
	1/4[f]	6.4[e,f]					
ENiMo-1, ENiMo-3, ENiMo-7, ENiMo-8, ENiMo-9, ENiMo-10	5/64	2.0	Required	Required	Required	Required	F
	3/32	2.4[e]					
	—	2.5					
	1/8	3.2					
	5/32	4.0					
	3/16	4.8[e]					
	—	5.0					
ENiCrCoMo-1	5/64	2.0	Required	Required	Required	Required	V
	3/32	2.4[e]					
	—	2.5					
	1/8	3.2					
	5/32	4.0	Required	Required	Required	Required	F
ENiCrMo-1, ENiCrMo-2, ENiCrMo-4, ENiCrMo-5, ENiCrMo-7, ENiCrMo-9, ENiCrMo-11, ENiCrMo-13	3/32	2.4[e]	Required	Required	Required	Required	F
	—	2.5					
	1/8	3.2					
	5/32	4.0					
	3/16	4.8[e]					
	—	5.0					
ENiCrMo-12	5/64	2.0	Required	Required	Required	Required	V
	3/32	2.4[e]					
	—	2.5					
	1/8	3.2					
	5/32	4.0	Required	Required	Required	Required	F

NOTES:
a. See Table 3 for base metals to be used in these tests.
b. Three transverse side-bend test specimens are required except for 5/64 in. [2.0 mm] electrodes. For that size, two transverse face-bend specimens are required.
c. The groove weld for mechanical properties (Figure 2) may also be used for the radiographic soundness test conducted in the flat position. In that case, the test assembly is radiographed before the coupons for the tensile and bend test specimens are removed.
d. The position of welding shown in this column is only for the radiographic soundness test (V = vertical position with uphill progression, F = flat). All other test assemblies are welded in the flat position.
e. Metric sizes not shown in ISO 544.
f. Applies only to ENiCu-7 classification.

retest need be only for those specific elements that failed to meet the test requirement.

If the results of one or both retests fail to meet the requirement, the material under test shall be considered as not meeting the requirements of this specification for that classification.

In the event that, during preparation or after completion of any test, it is clearly determined that prescribed or proper procedures were not followed in preparing the weld test assembly or test specimen(s) or in conducting the test, the test shall be considered invalid, without regard to whether the test was actually completed, or whether test results met, or failed to meet, the requirement. That test shall be repeated, following proper prescribed procedures. In this case, the requirement for doubling of the number of test specimens does not apply.

9. Weld Test Assemblies

9.1 To perform all required tests as specified in Table 2, a minimum of one weld test assembly is required. Two, or even three, may be necessary (according to the classification, size, and manner in which the testing is conducted, i.e., with respect to alternative options).

The weld test assemblies are identified as follows:

(1) The weld pad in Fig. 1 for chemical analysis of the undiluted weld metal

(2) The groove weld in Fig. 2 for mechanical properties and soundness

(3) The groove weld in Fig. 3 for radiographic soundness.

The sample for chemical analysis may be taken from a low dilution area in the groove weld in Fig. 2, or from the reduced section of the fractured tension test specimen, thereby avoiding the need to make the weld pad. In case of dispute, the weld pad shall be the referee method.

9.2 Preparation of each weld test assembly shall be as prescribed in 9.3, 9.4.1, and 9.4.2. The base metal for each assembly shall meet the requirements of the appropriate ASTM specification shown in Table 3 or an equivalent specification. Testing of the assemblies shall be as prescribed in Section 10, Chemical Analysis, Section 11, Radiographic Test, Section 12, Tension Test, and Section 13, Bend Test.

9.3 Weld Pad. A weld pad shall be prepared as specified in Table 2 and shown in Fig. 1, except when one of the alternatives in 9.1 (taking the sample from the weld metal in the groove or from the tension test specimen) is selected. Base metal of any convenient size, of the type specified in Table 3, shall be used as the base for the weld pad. The surface of the base metal on which the filler metal is deposited shall be clean. The pad shall be welded in the flat position with multiple beads and layers to obtain undiluted weld metal. The type of current and range of amperage used for welding shall be as recommended by the manufacturer. The preheat temperature shall be not less than 60°F [16°C] and the interpass temperature shall not exceed 300°F [150°C]. The slag shall be removed after each pass. The pad may be quenched in water (temperature above 60°F [16°C]) between passes. The dimensions of the completed pad shall be as shown in Fig. 1 for each size of electrode. Testing of this assembly shall be as specified in Section 10, Chemical Analysis.

9.4 Groove Weld

9.4.1 Mechanical Properties and Soundness. A test assembly shall be prepared and welded as specified in Fig. 2 and Table 2 using base metal of an appropriate type in Table 3. Testing of this assembly shall be as specified in Section 12, Tension Test, and Section 13, Bend Test. Additionally, this assembly may be used to satisfy the requirements of the flat position radiographic test (Note c to Table 2). In that case, the assembly shall be radiographed as required in Section 11, Radiographic Test. The assembly shall be tested in the as-welded condition.

9.4.2 Radiographic Soundness. A test assembly shall be prepared for electrodes of all classifications and welded as shown in Fig. 3, using base metal of the appropriate type specified in Table 3. The welding position shall be as specified in Table 2 for the different electrode sizes and classifications. Testing of the assembly shall be as specified in Section 11, Radiographic Test. The groove weld in Fig. 2 may be radiographed (for those classifications for which the radiographic test is welded in the flat position), thus eliminating the need to make the groove weld in Fig. 3, in those cases.

10. Chemical Analysis

10.1 The sample for analysis shall be taken from weld metal obtained from the weld pad, the reduced section of the fractured tension test specimen, or a low-dilution area of the groove weld in Fig. 2. The top surface of the pad described in 9.3 and shown in Fig. 1 (when the pad is used), shall be removed and discarded. A sample for analysis shall be obtained from

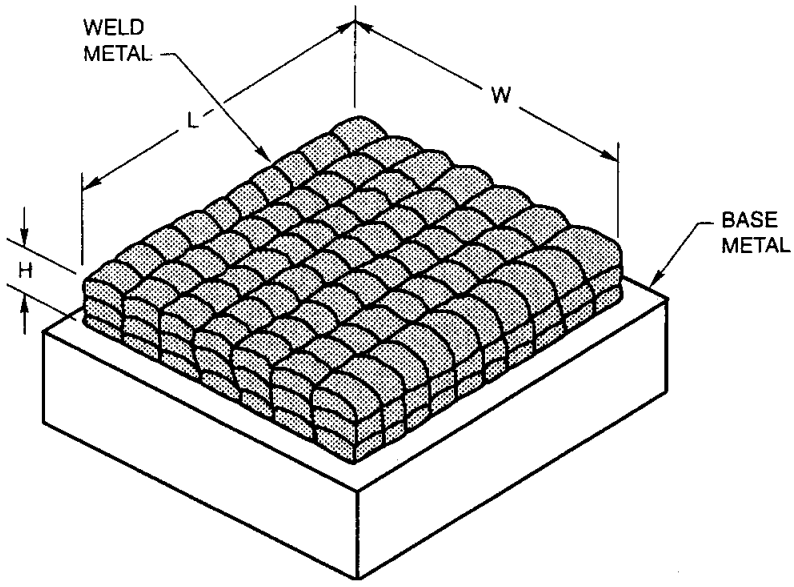

Electrode Size			Weld Pad Size	
in.	mm		in., min.	mm, min.
5/64	2.0			
3/32	2.4*	L =	1-1/2	38
—	2.5	W =	1-1/2	38
1/8	3.2	H =	1/2	13
5/32	4.0			
3/16	4.8*	L =	2	50
—	5.0	W =	2	50
1/4	6.4*	H =	7/8	22

*Metric sizes not shown in ISO 544.

GENERAL NOTES:
(1) The number and size of the beads will vary according to the size of the electrode and the width of the weave, as well as the amperage employed.
(2) If carbon steel base metal is used for the chemical analysis pad, the height of the pad (dimension H) shall be increased as required in Note 1 of Table 3.

FIG. 1 PAD FOR CHEMICAL ANALYSIS OF UNDILUTED WELD METAL

the underlying metal by any appropriate mechanical means. The sample shall be free of slag.

For electrodes smaller than $^{5}/_{32}$ in. [4.0 mm], the sample shall be taken at least $^{3}/_{8}$ in. [9.5 mm] from the nearest surface of the base metal. For electrodes $^{5}/_{32}$ in. [4.0 mm] and larger, the sample shall be taken at least $^{3}/_{4}$ in. [19 mm] from that surface. If carbon-steel base metal is used in the chemical analysis test pad, see Note (1) in Table 3. The sample from the reduced section of the fractured tension test specimen and the sample from a low-dilution area of the groove weld shall be prepared for analysis by any suitable mechanical means.

10.2 The sample shall be analyzed by accepted analytical methods. The referee method shall be either ASTM E38, *Standard Methods for Chemical Analysis of Nickel-Chromium and Nickel-Chromium-Iron Alloys*, or ASTM E76, *Standard Methods for Chemical Analysis of Nickel-Copper Alloys*, as appropriate.

10.3 The results of the analysis shall meet the requirements of Table 1 for the classification of electrode under test.

11. Radiographic Test

11.1 The radiographic soundness test weld described in 9.4.2 and shown in Fig. 3 (or the groove weld described in 9.4.1 and shown in Fig. 2, when that is desired and is permitted by Note (3) of Table 2), shall be radiographed to evaluate the usability of the electrode.

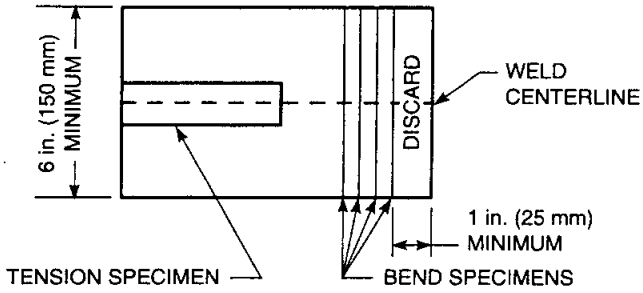

LAYOUT OF TEST ASSEMBLY

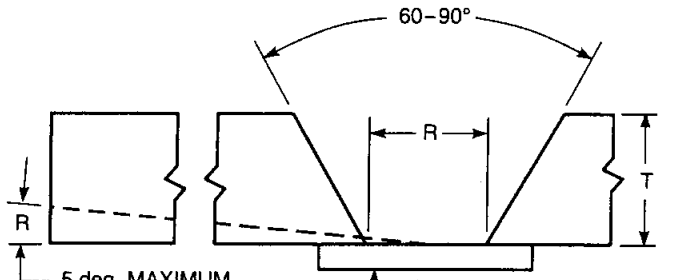

GROOVE PREPARATION

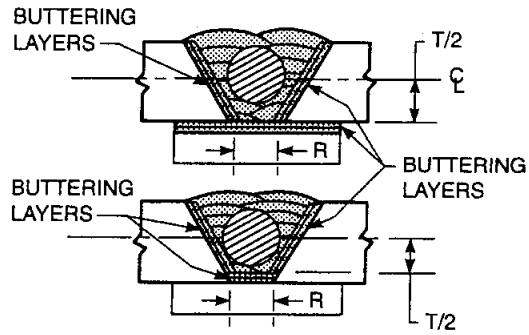

BUTTERING CONDITIONS FOR CARBON STEEL TEST PLATE ASSEMBLY

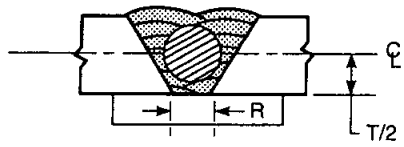

MATCHING COMPOSITION TEST PLATE ASSEMBLY

BUTTERING CONDITIONS AND TENSILE SPECIMEN LOCATION

Electrode Size		T (Thickness), min.		R (Root opening)[a]		Number of Layers
in.	mm	in.	mm	in.	mm	min.
5/64	2.0	3/8	10	3/16	5	(b)
3/32	2.4[c]	1/2	13	1/4	7	(b)
—	2.5	1/2	13	1/4	7	(b)
1/8	3.2	1/2	19	1/4	7	(b)
5/32	4.0	3/4	19	1/2	13	6
3/16	4.8[c]	3/4	19	1/2	13	6
—	5.0	3/4	19	1/2	13	6
1/4	6.4[c]	3/4	19	1/2	13	6

a. Tolerance: ±1/16 in. [2 mm].
b. Number of layers not specified, but pass and layer sequence shall be recorded and reported.
c. Metric sizes not shown in ISO 544.

GENERAL NOTES:
(1) Base metal shall be as specified in Table 3.
(2) The surfaces to be welded shall be clean.
(3) The minimum length of the test assembly is 6 in. [150 mm] but the assembly shall be as long as necessary to provide the specimens for the number and type of tests required. Minimum width is 6 in. [150 mm].
(4) Prior to welding, the assembly may be preset so that the welded joint will be within 5 degrees of plane after welding. As an alternate, restraint or a combination of restraint and presetting may be used. A test assembly that is more than 5 degrees out of plane shall be discarded. Straightening of the test assembly is prohibited.
(5) Welding shall be performed in the flat position, using the type and range of current and welding technique recommended by the electrode manufacturer.
(6) The preheat temperature shall be 60°F [16°C]. The interpass temperature shall not exceed 300°F [150°C].
(7) The welds shall be made with stringer beads or weave beads no wider than four times the diameter of the core wire. The completed weld shall be at least flush with the surface of the test plate. For electrodes larger than 1/8 in. [3.2 mm], the root beads may be deposited with 3/32 or 1/8 in. [2.4, 2.5, or 3.2 mm] electrodes.
(8) The tests shall be conducted without a postweld heat treatment.

FIG. 2 GROOVE WELD TEST ASSEMBLY FOR MECHANICAL PROPERTIES AND SOUNDNESS

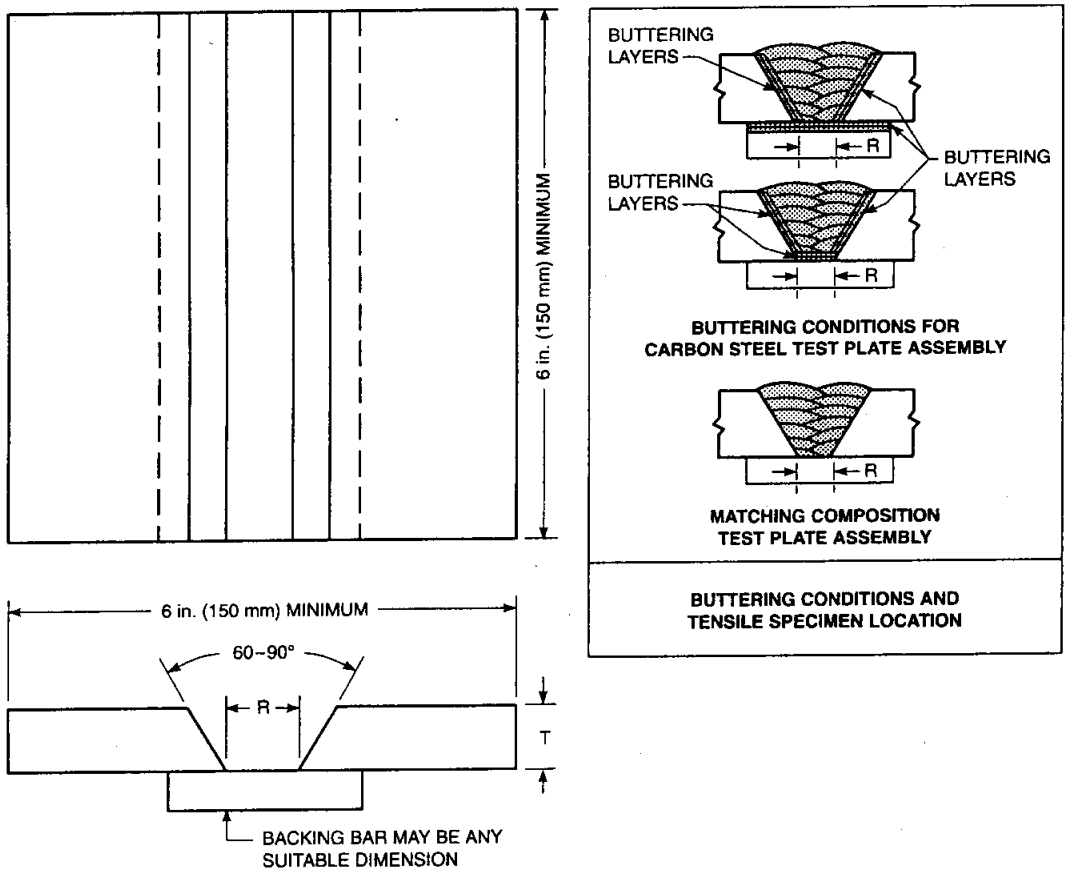

Electrode Size		T (Thickness), min.		R (Root opening)[a]	
in.	mm	in.	mm	in.	mm
5/64	2.0	1/8	3	1/8	3
3/32	2.4[b]	1/4	7	1/4	7
—	2.5	1/4	7	1/4	7
1/8	3.2	3/8	10	5/16	8
5/32	4.0	3/8	10	3/8	10
3/16	4.8[b]	1/2	13	1/2	13
—	5.0	1/2	13	1/2	13
1/4	6.4[b]	1/2	13	1/2	13

a. Tolerance: ±1/16 in. [2 mm].
b. Metric sizes not shown in ISO 544.

GENERAL NOTES:
(1) Base metal shall be as specified in Table 3.
(2) The surface to be welded shall be clean.
(3) Welding shall be conducted in the vertical-up or flat position, as required in Table 2 (also see note c in Table 2) using the type and range of current, and technique recommended by the electrode manufacturer.
(4) The preheat temperature shall be 60°F [16°C]. The interpass temperature shall not exceed 300°F [150°C].
(5) The welds shall be made with a stringer bead technique or a weave to produce a bead no wider than four times the diameter of the core wire. The root layer in tests of electrodes larger than $\frac{1}{8}$ in. [3.2 mm] diameter may be deposited with $\frac{3}{32}$ or $\frac{1}{8}$ in. [2.4, 2.5 or 3.2 mm] electrodes of that same classification. In addition to the start and stop at the ends of the weld, each bead shall also contain a start and a stop somewhere in between.
(6) A small amount of grinding between beads is permissible for welds in the vertical position, but an inordinate amount should not be required to produce a satisfactory weld.
(7) The completed weld shall be at least flush with the surface of the test plate.
(8) The backing strip shall be removed, and the weld on both sides of the assembly shall be machined or ground smooth and flush with the original surfaces of the base plate.
(9) The assembly shall be radiographed as specified in Section 11, Radiographic Test.

FIG. 3 GROOVE WELD TEST ASSEMBLY FOR RADIOGRAPHIC SOUNDNESS TEST

TABLE 3
BASE METALS FOR TEST ASSEMBLIES

AWS Classification	Material[a,b]	ASTM Specifications[c]	UNS Number
ENi-1	Nickel	B160, B162	N02200, N02201
ENiCu-7	Nickel-Copper Alloy	B127, B164	N04400
ENiCrFe-1, 2, 3, 4, 9 ,10	Nickel-Chromium-Iron Alloy	B166, B168	N06600
ENiCrFe-7	Nickel-Chromium-Iron Alloy	B166, B167, B168	N06690
ENiMo-1, 3, 7, 8, 9, 10	Nickel-Molybdenum Alloy	B333	N10001, N10665, N10675
ENiCrCoMo-1	Nickel-Chromium-Cobalt-Molybdenum Alloy	B166, B168	N06617
ENiCrMo-1, 9, 11	Nickel-Chromium-Molybdenum Alloy	B582	N06007, N06985, N06030
ENiCrMo-2	Nickel-Chromium-Molybdenum Alloy	B435	N06002
ENiCrMo-3	Nickel-Chromium-Molybdenum Alloy	B443, B446	N06625
ENiCrMo-4, 5, 7, 10, 13, 14	Low-Carbon Nickel-Chromium-Molybdenum Alloy	B575	N10276, N06455, N06022, N06059, N06686
ENiCrMo-6	Nickel-Chromium-Molybdenum Alloy	B166, B168	N06600
ENiCrMo-12	Chromium-Nickel-Molybdenum Alloy (Austenitic Stainless Steel)	A240	S31254

NOTES:
a. Either the base metals specified or carbon steel (A131, A285, A515) may be used. If carbon steel is used, two layers of buttering shall be applied to the surface and backing strip if appropriate. For chemical analysis, base metals other than those specified may be used as the base for the undiluted weld pad provided that, for electrodes of the $\frac{1}{8}$ in. [3.2 mm] size and smaller, the minimum height shown in Figure 1 is $\frac{3}{4}$ in. [19 mm] and the sample for analysis is taken at least $\frac{5}{8}$ in. [16 mm] from the nearest surface of the base metal. For electrode sizes $\frac{5}{32}$ in. [4 mm] through $\frac{1}{4}$ in. [6.4 mm], these dimensions are 1 in. [25 mm] and $\frac{7}{8}$ in. [22 mm], respectively.
b. All specified base metals shall be in the annealed condition prior to welding.
c. Equivalent material specifications may be used.

In preparation for radiography, the backing shall be removed, and both surfaces of the weld shall be machined or ground smooth and flush with the original surfaces of the base metal. Both surfaces of the test assembly, in the area of the weld, shall be smooth enough to avoid difficulty in interpreting the radiograph.

11.2 The weld shall be radiographed in accordance with ASTM E142, *Standard Method for Controlling Quality of Radiographic Testing*. The quality level of inspection shall be 2-2T.

11.3 The electrode meets the requirements of this specification if the radiograph shows the following:

(a) No cracks, no incomplete fusion, and no incomplete penetration

(b) No slag inclusions in excess of those permitted by Note 4 to the radiographic standards in Figs. 4 through 8, according to the size of the electrode

(c) No rounded indications in excess of those permitted by the radiographic standards in Figs. 4 through 8, according to the thickness of the test assembly, or the alternative method of evaluation in 11.3.1

In evaluating the radiograph, 1 in. [25 mm] of the weld on each end of the test assembly shall be disregarded.

11.3.1 The alternative method of evaluation involves calculation of the total area of the rounded indications as they appear on the radiograph. This total area shall not exceed 1 percent of the thickness of the test assembly multiplied by the length of the weld used in the evaluation (length of the weld in the test assembly minus 1 in. [25 mm] on each end). The value given in Note 3 to each of the figures (4 through 8) has been calculated for 6 in. [150 mm] of weld (an 8-in. [200-mm] long test assembly). The value for weld lengths other than this will differ on a linearly proportional basis.

11.3.2 A rounded indication is an indication (on the radiograph) whose length is no more than three times its width. Rounded indications may be circular, elliptical, conical, or irregular in shape, and they may have tails. The size of a rounded indication is the largest dimension of the indication including any tail

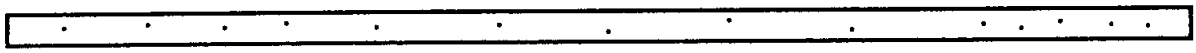

(A) MEDIUM ROUNDED INDICATIONS

SIZE PERMITTED IS 0.025 in. [0.6 mm] MAXIMUM.
NUMBER PERMITTED IN ANY 6 in. [150 mm] OF WELD IS 14.

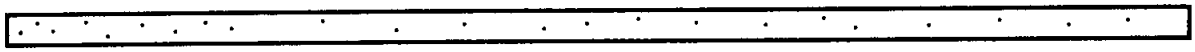

(B) SMALL ROUNDED INDICATIONS

SIZE PERMITTED IS 0.020 in. [0.5 mm] MAXIMUM.
NUMBER PERMITTED IN ANY 6 in. [150 mm] OF WELD IS 23.

GENERAL NOTES:
(1) The chart that is most representative of the size of the rounded indications in the radiograph of the test assembly shall be used to determine conformance with this specification. Rounded indications $\frac{1}{64}$ in. [0.4 mm] and smaller shall be disregarded. The largest dimension of the indication (including any tail) is the size of the indication.
(2) These radiographic requirements are for test welds made in the laboratory specifically for classification purposes. They are more restrictive than those normally encountered in general fabrication.
(3) When using the alternative method of evaluation described in 11.3.1, the total cross-sectional area of the rounded indications (calculated from measurements taken from the radiograph) shall not exceed 0.008 in.^{2} [5.2 mm^2] in any 6 in. [150 mm] of weld.
(4) The acceptance standard for slag inclusions in this assembly is the following:
(a) Length of each individual slag indication: $\frac{1}{16}$ in. [1.6 mm] maximum
(b) Total length of all slag indications: $\frac{1}{8}$ in. [3.2 mm] maximum

FIG. 4 RADIOGRAPHIC STANDARDS FOR $\frac{1}{8}$ IN. [3.2 MM] TEST ASSEMBLY

that may be present. The indications may be of porosity or slag. The total area of the rounded indications for the alternative method shall not exceed the values given in Note 3 to the radiographic standards (Figs. 4 through 8). Indications whose largest dimension does not exceed $\frac{1}{64}$ in. [0.40 mm] shall be disregarded. Test assemblies with rounded indications larger than the largest indications permitted in the radiographic standards do not meet the requirements of this specification.

12. Tension Test

12.1 One all-weld-metal tension test specimen shall be machined from the groove weld described in 9.4.1 and shown in Fig. 2. The dimensions of the specimen shall be as shown in Fig. 9.

12.2 The specimen shall be tested in the manner described in the tension test section of the latest edition of ANSI/AWS B4.0, *Standard Methods for Mechanical Testing of Welds.*

12.3 The results of the tension test shall meet the requirements specified in Table 4.

13. Bend Test

13.1 Three transverse side bend specimens (for electrodes larger than $\frac{5}{64}$ in. [2.0 mm]) or two transverse face bend specimens (for $\frac{5}{64}$ in. [2.0 mm] electrodes), as required in Table 2, shall be taken from the assembly described in 9.4.1 and shown in Fig. 2. The dimensions of the specimens shall be as shown in Table 5.

13.2 The specimens shall be bent uniformly through 180 deg over a $\frac{3}{4}$-in. [19-mm] radius in any suitable jig. Two standard jigs are shown in Fig. 10. Positioning of the side bend specimens shall be such that the side of the bend with the greater discontinuities, if any, is in tension. Positioning of the face bend specimens shall be such that the face of the weld is in tension. For both types of transverse bend specimen, the weld shall be at the center of the bend.

13.3 Each specimen, after bending, shall conform to the $\frac{3}{4}$-in. [19-mm] radius, with an appropriate allowance for springback, and the weld metal shall not contain fissures in excess of those permitted in Table 6 when examined with the unaided eye.



(A) ASSORTED ROUNDED INDICATIONS

SIZE PERMITTED IS 0.050 in. [1.3 mm] MAXIMUM.
NUMBER PERMITTED IN ANY 6 in. [150 mm] OF WELD IS 21, WITH THE FOLLOWING RESTRICTIONS:

LARGE: UP TO 0.050 in. [1.3 mm] – 4 PERMITTED
MEDIUM: UP TO 0.031 in. [0.8 mm] – 5 PERMITTED
SMALL: UP TO 0.020 in. [0.5 mm] – 12 PERMITTED



(B) LARGE ROUNDED INDICATIONS

SIZE PERMITTED IS 0.050 in. [1.3 mm] MAXIMUM.
NUMBER PERMITTED IN ANY 6 in. [150 mm] OF WELD IS 8.



(C) MEDIUM ROUNDED INDICATIONS

SIZE PERMITTED IS 0.031 in. [0.8 mm] MAXIMUM.
NUMBER PERMITTED IN ANY 6 in. [150 mm] OF WELD IS 19.



(D) SMALL ROUNDED INDICATIONS

SIZE PERMITTED IS 0.020 in. [0.5 mm] MAXIMUM.
NUMBER PERMITTED IN ANY 6 in. [150 mm] OF WELD IS 48.

GENERAL NOTES:

(1) The chart that is most representative of the size of the rounded indications in the radiograph of the test assembly shall be used to determine conformance with this specification. Rounded indications $\frac{1}{64}$ in. [0.4 mm] and smaller shall be disregarded. The largest dimension of the indication (including any tail) is the size of the indication.

(2) These radiographic requirements are for test welds made in the laboratory specifically for classification purposes. They are more restrictive than those normally encountered in general fabrication.

(3) When using the alternative method of evaluation described in 11.3.1, the total cross-sectional area of the rounded indications (calculated from measurements taken from the radiograph) shall not exceed 0.015 $in.^2$ [9.7 mm^2] in any 6 in. [150 mm] of weld.

(4) The acceptance standard for slag inclusions in this assembly is the following:
   (a) Length of each individual slag indication: $\frac{5}{32}$ in. [4.0 mm] maximum
   (b) Total length of all slag indications: $\frac{1}{4}$ in. [6.4 mm] maximum

FIG. 5 RADIOGRAPHIC STANDARDS FOR $\frac{1}{4}$ IN. [6.4 MM] TEST ASSEMBLY



(A) ASSORTED ROUNDED INDICATIONS

SIZE PERMITTED IS 0.075 in. [1.9 mm] MAXIMUM.
NUMBER PERMITTED IN ANY 6 in. [150 mm] OF WELD IS 17, WITH THE FOLLOWING RESTRICTIONS:

LARGE: UP TO 0.075 in. [1.9 mm] – 3 PERMITTED
MEDIUM: UP TO 0.049 in. [1.3 mm] – 3 PERMITTED
SMALL: UP TO 0.020 in. [0.5 mm] – 11 PERMITTED

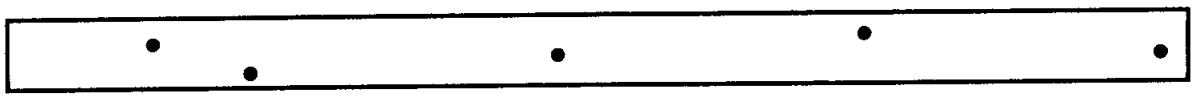

(B) LARGE ROUNDED INDICATIONS

SIZE PERMITTED IS 0.075 in. [1.9 mm] MAXIMUM.
NUMBER PERMITTED IN ANY 6 in. [150 mm] OF WELD IS 5.

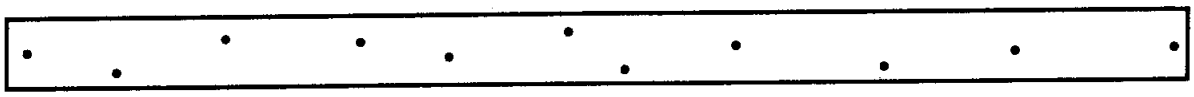

(C) MEDIUM ROUNDED INDICATIONS

SIZE PERMITTED IS 0.049 in. [1.3 mm] MAXIMUM.
NUMBER PERMITTED IN ANY 6 in. [150 mm] OF WELD IS 11.

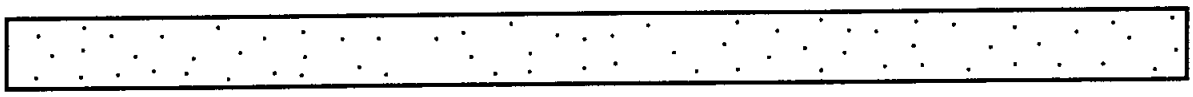

(D) SMALL ROUNDED INDICATIONS

SIZE PERMITTED IS 0.020 in. [0.5 mm] MAXIMUM.
NUMBER PERMITTED IN ANY 6 in. [150 mm] OF WELD IS 72.

GENERAL NOTES:

(1) The chart that is most representative of the size of the rounded indications in the radiograph of the test assembly shall be used to determine conformance with this specification. Rounded indications $\frac{1}{64}$ in. [0.4 mm] and smaller shall be disregarded. The largest dimension of the indication (including any tail) is the size of the indication.

(2) These radiographic requirements are for test welds made in the laboratory specifically for classification purposes. They are more restrictive than those normally encountered in general fabrication.

(3) When using the alternative method of evaluation described in 11.3.1, the total cross-sectional area of the rounded indications (calculated from measurements taken from the radiograph) shall not exceed 0.023 in.^{2} [14.8 mm^2] in any 6 in. [150 mm] of weld.

(4) The acceptance standard for slag inclusions in this assembly is the following:
(a) Length of each individual slag indication: $\frac{7}{32}$ in. [5.6 mm] maximum
(b) Total length of all slag indications: $\frac{3}{8}$ in. [9.5 mm] maximum

FIG. 6 RADIOGRAPHIC STANDARDS FOR $\frac{3}{8}$ IN. [9.5 MM] TEST ASSEMBLY

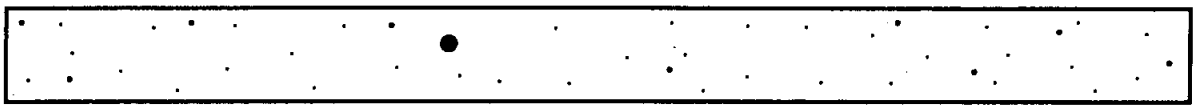

(A) ASSORTED ROUNDED INDICATIONS

SIZE PERMITTED IS 0.10 in. [2.5 mm] MAXIMUM.
NUMBER PERMITTED IN ANY 6 in. [150 mm] OF WELD IS 45, WITH THE FOLLOWING RESTRICTIONS:

LARGE: UP TO 0.10 in. [2.5 mm] – 1 PERMITTED
MEDIUM: UP TO 0.031 in. [0.8 mm] – 9 PERMITTED
SMALL: UP TO 0.019 in. [0.5 mm] – 35 PERMITTED



(B) LARGE ROUNDED INDICATIONS

SIZE PERMITTED IS 0.10 in. [2.5 mm] MAXIMUM.
NUMBER PERMITTED IN ANY 6 in. [150 mm] OF WELD IS 4.



(C) MEDIUM ROUNDED INDICATIONS

SIZE PERMITTED IS 0.031 in. [0.8 mm] MAXIMUM.
NUMBER PERMITTED IN ANY 6 in. [150 mm] OF WELD IS 40.

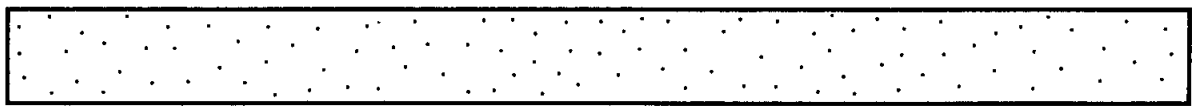

(D) SMALL ROUNDED INDICATIONS

SIZE PERMITTED IS 0.019 in. [0.5 mm] MAXIMUM.
NUMBER PERMITTED IN ANY 6 in. [150 mm] OF WELD IS 101.

GENERAL NOTES:

(1) The chart that is most representative of the size of the rounded indications in the radiograph of the test assembly shall be used to determine conformance with this specification. Rounded indications $\frac{1}{64}$ in. [0.4 mm] and smaller shall be disregarded. The largest dimension of the indication (including any tail) is the size of the indication.

(2) These radiographic requirements are for test welds made in the laboratory specifically for classification purposes. They are more restrictive than those normally encountered in general fabrication.

(3) When using the alternative method of evaluation described in 11.3.1, the total cross-sectional area of the rounded indications (calculated from measurements taken from the radiograph) shall not exceed 0.030 $in.^2$ [19.4 mm^2] in any 6 in. [150 mm] of weld.

(4) The acceptance standard for slag inclusions in this assembly is the following:
(a) Length of each individual slag indication: $\frac{7}{32}$ in. [5.6 mm] maximum
(b) Total length of all slag indications: $\frac{7}{16}$ in. [11 mm] maximum

FIG. 7 RADIOGRAPHIC STANDARDS FOR ½ IN. [13 MM] TEST ASSEMBLY

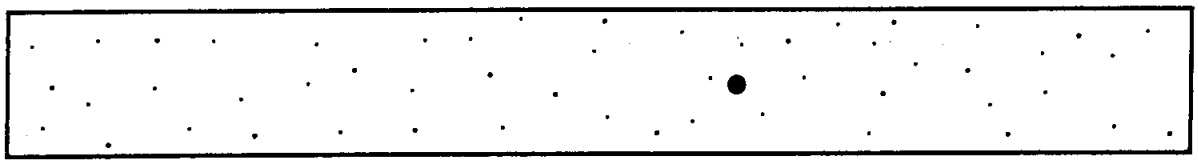

(A) ASSORTED ROUNDED INDICATIONS

SIZE PERMITTED IS 0.125 in. [3.2 mm] MAXIMUM.
NUMBER PERMITTED IN ANY 6 in. [150 mm] OF WELD IS 53, WITH THE FOLLOWING RESTRICTIONS:

LARGE: UP TO 0.125 in. [3.2 mm] – 1 PERMITTED
MEDIUM: UP TO 0.034 in. [0.9 mm] – 17 PERMITTED
SMALL: UP TO 0.024 in. [0.6 mm] – 35 PERMITTED



(B) LARGE ROUNDED INDICATIONS

SIZE PERMITTED IS 0.125 in. [3.2 mm] MAXIMUM.
NUMBER PERMITTED IN ANY 6 in. [150 mm] OF WELD IS 4.

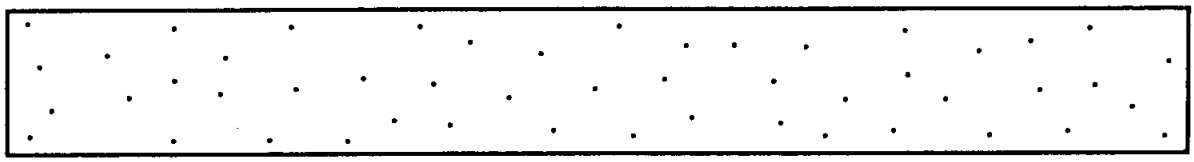

(C) MEDIUM ROUNDED INDICATIONS

SIZE PERMITTED IS 0.034 in. [0.9 mm] MAXIMUM.
NUMBER PERMITTED IN ANY 6 in. [150 mm] OF WELD IS 50.

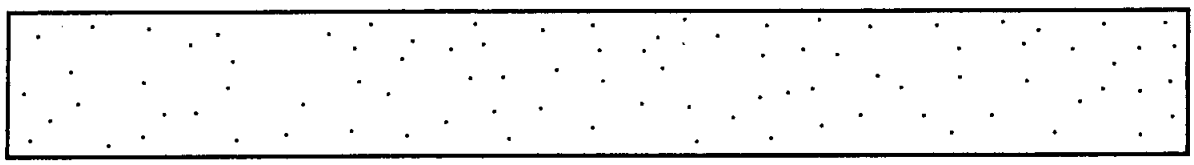

(D) SMALL ROUNDED INDICATIONS

SIZE PERMITTED IS 0.024 in. [0.6 mm] MAXIMUM.
NUMBER PERMITTED IN ANY 6 in. [150 mm] OF WELD IS 90.

GENERAL NOTES:

(1) The chart that is most representative of the size of the rounded indications in the radiograph of the test assembly shall be used to determine conformance with this specification. Rounded indications $\frac{1}{64}$ in. [0.4 mm] and smaller shall be disregarded. The largest dimension of the indication (including any tail) is the size of the indication.

(2) These radiographic requirements are for test welds made in the laboratory specifically for classification purposes. They are more restrictive than those normally encountered in general fabrication.

(3) When using the alternative method of evaluation described in 11.3.1, the total cross-sectional area of the rounded indications (calculated from measurements taken from the radiograph) shall not exceed 0.045 in.^{2} [29.0 mm^2] in any 6 in. [150 mm] of weld.

(4) The acceptance standard for slag inclusions in this assembly is the following:
(a) Length of each individual slag indication: $\frac{5}{16}$ in. [7.9 mm] maximum
(b) Total length of all slag indications: $\frac{15}{32}$ in. [11.9 mm] maximum

FIG. 8 RADIOGRAPHIC STANDARDS FOR $\frac{3}{4}$ IN. [19 MM] TEST ASSEMBLY

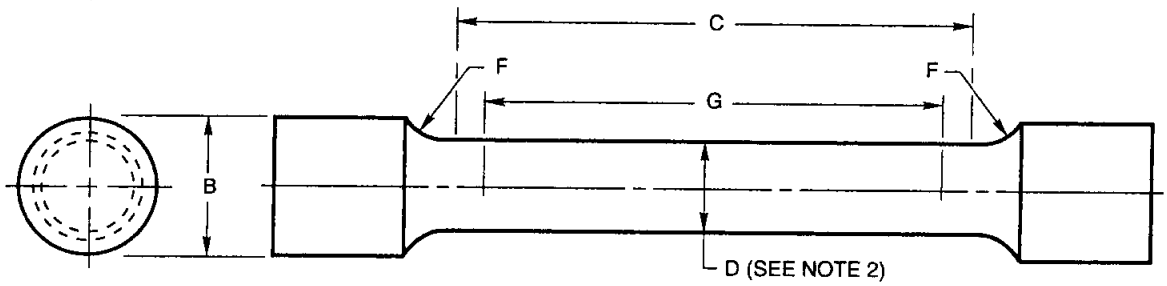

Dimensions of Specimens, in.						
Test Assembly Thickness (T)	D	G	C	B	F-min	Approximate Area, in.^{2}
3/4	0.500 ± 0.010	2.000 ± 0.005	2-1/4	3/4	0.38 (3/8)	0.2
1/2	0.250 ± 0.005	1.000 ± 0.005	1-1/4	3.8	0.18	0.05
3/8	0.160 ± 0.003	0.640 ± 0.005	3/4	5/16	0.15	0.02
Dimensions of Specimens, mm						
Test Assembly Thickness (T)	D	G	C	B	F-min	Approximate Area, mm^2
19	12.7 ± 0.25	50.8 ± 0.13	57	19	9.5	129
13	6.4 ± 0.13	25.4 ± 0.13	32	9.5	4.6	32
10	4.1 ± 0.08	16.3 ± 0.13	19	7.9	3.8	13

GENERAL NOTES:

(1) Dimensions C and G shall be as shown, but the ends may be of any shape required to fit the testing machine, as long as the load is kept axial.

(2) The diameter of the specimen (dimension D) within the gage length (dimension G) shall be slightly smaller at the center than at the ends (controlling dimension). The difference shall not exceed 1 percent of the diameter.

(3) The finish of the surface within the C dimension shall be no rougher than 63 μin. [1.6 μm].

FIG. 9 DIMENSIONS OF ALL-WELD-METAL TENSION TEST SPECIMEN

TABLE 4
ALL-WELD-METAL TENSION TEST REQUIREMENTS

AWS Classification	Tensile Strength, min. ksi	Tensile Strength, min. MPa	Elongation* Percent, min.
ENi-1	60	410	20
ENiCu-7	70	480	30
ENiCrFe-1, ENiCrFe-2, ENiCrFe-3, ENiCrFe-7	80	550	30
ENiCrFe-4	95	650	20
ENiCrFe-9, ENiCrFe-10	95	650	25
ENiMo-1, ENiMo-3, ENiMo-7, ENiMo-10	100	690	25
ENiMo-8, ENiMo-9	95	650	25
ENiCrCoMo-1	90	620	25
ENiCrMo-1	90	620	20
ENiCrMo-2	95	650	20
ENiCrMo-3	110	760	30
ENiCrMo-4, ENiCrMo-5, ENiCrMo-7, ENiCrMo-10, ENiCrMo-13	100	690	25
ENiCrMo-6	90	620	35
ENiCrMo-9	90	620	25
ENiCrMo-11	85	585	25
ENiCrMo-12	95	650	35
ENiCrMo-14	100	690	30

NOTE:
*The elongation shall be determined from a gage length equal to 4 times the gage diameter.

PART C — MANUFACTURE, IDENTIFICATION, AND PACKAGING

14. Method of Manufacture

The welding electrodes classified according to this specification may be manufactured by any method that will produce electrodes that meet the requirements of this specification.

TABLE 5
DIMENSIONS OF BEND TEST SPECIMENS

	Length, min. in.	Length, min. mm	Width, min. in.	Width, min. mm	Thickness, min. in.	Thickness, min. mm
Side[a]	6	150	(b)	(b)	3/8	9.5
Face[a]	6	150	1 1/2	38	3/8	9.5

NOTES:
a. The radius of the corners of the specimen shall be 1/8 in. [3.2 mm] maximum.
b. The width of the specimen is the thickness of the test assembly from which the specimen is taken (see Figure 2).

15. Standard Sizes and Lengths

15.1 Standard sizes (diameter of the core wire) and lengths of electrodes are as shown in Table 7.

15.2 The diameter of the core wire shall not vary more than ±0.003 in. [±0.08 mm] from the diameter specified. The length shall not vary more than ±3/8 in. [±10 mm] from that specified.

16. Core Wire and Covering

16.1 The core wire and covering shall be free of defects that would interfere with uniform deposition of the electrode.

16.2 The core wire and covering shall be concentric to the extent that the maximum core-plus-one covering dimension shall not exceed the minimum core-plus-one covering dimension by more than the following:

(a) Seven percent of the mean dimension in sizes 3/32 in. [2.5 mm] and smaller

(b) Five percent of the mean dimension in sizes 1/8 in. [3.2 mm] and 5/32 in. [4.0 mm]

(c) Four percent of the mean dimension in sizes 3/16 in. [4.8 mm] and larger

The concentricity may be measured by any suitable means.

17. Exposed Core

17.1 The grip end of each electrode shall be bare (free of covering) for a distance of not less than 3/4 in. [19 mm], nor more than 1 1/4 in. [32 mm], to provide for electrical contact with the holder.

17.2 The arc end of each electrode shall be sufficiently bare and the covering sufficiently tapered to permit easy striking of the arc. The length of the bare portion (measured from the end to the point where the full

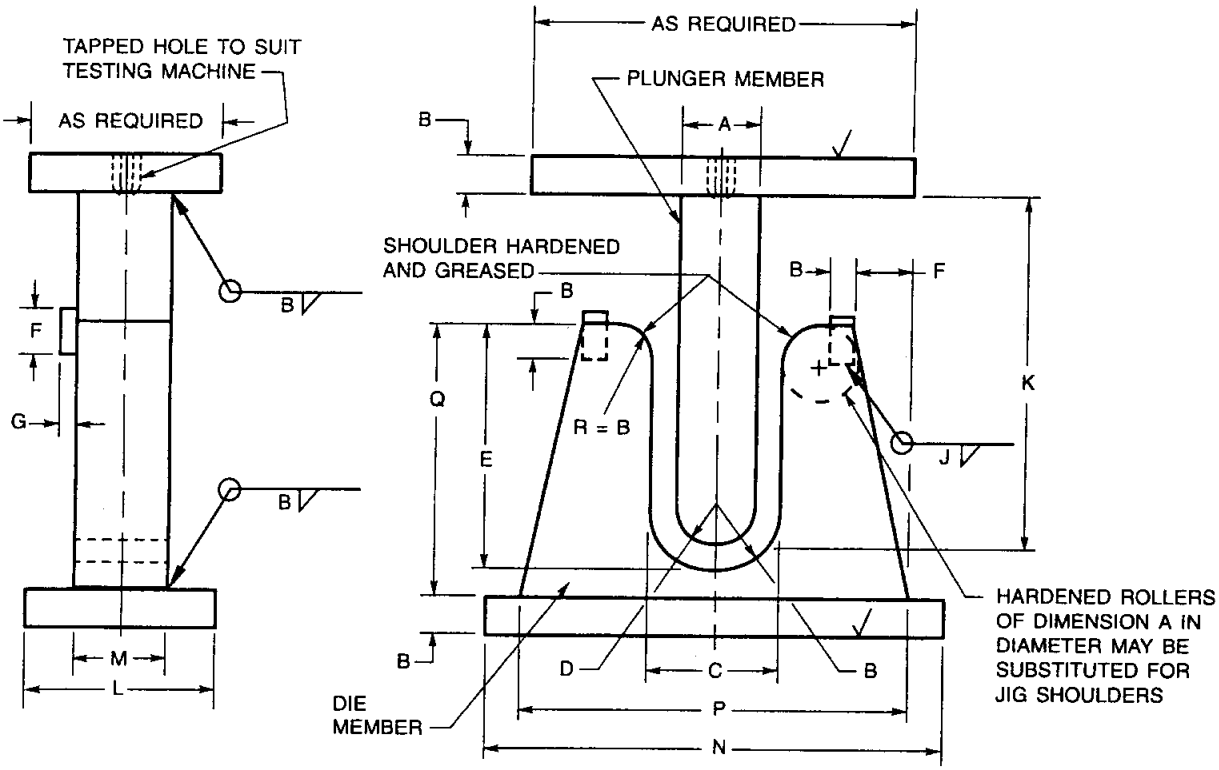

Standard Guided Bend Jig Figure Dimensions		
	in.	mm
A	1-1/2	38
B	3/4	19
C	2-3/8	60
D	1-3/16	30
E	4-1/2	110
F	1-1/8	29
G	1/4	6.4
H	1/2	13
J	1/8	3.2
K	6-3/4	170
L	3-7/8	98
M	2	51
N	9	230
P	7-1/2	190
Q	5-1/4	130

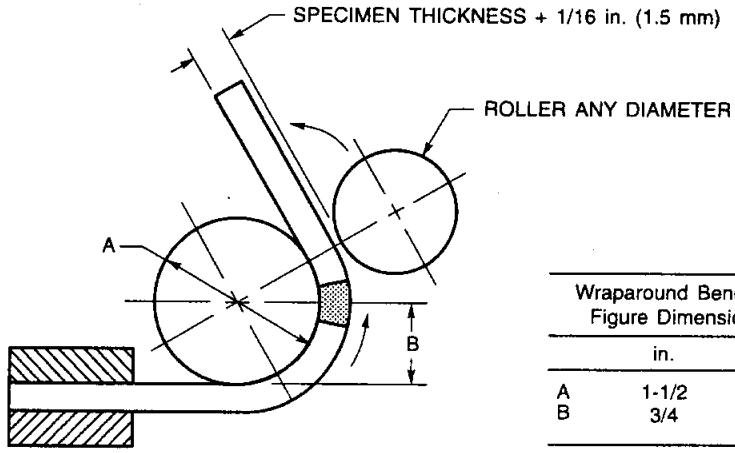

Wraparound Bend Jig Figure Dimensions		
	in.	mm
A	1-1/2	38
B	3/4	19

NOTES:
1. Specimen thickness if $^{3}/_{8}$ in. [9.5 mm] minimum.
2. Plunger and interior die surfaces shall be machine finished.

GENERAL NOTES:
(1) Specimen thickness is $^{3}/_{8}$ in. [9.5 mm] minimum.
(2) Dimensions not shown are the option of the designer; it is essential that the wrap-around jig has adequate rigidity so the assembly will not spring during the bending operation.
(3) One end of the specimen shall be firmly clamped to the jig so the specimen does not slide during bending.

FIG. 10 STANDARD BEND TEST JIGS

TABLE 6
BEND TEST REQUIREMENTS[a]

AWS Classification	Electrode Size, in.	Electrode Size, mm	Fissures Permitted, Maximum Number[b]	Fissures Permitted, Maximum Length[c], in.	Fissures Permitted, Maximum Length[c], mm
ENi-1	5/64	2.0	3	1/8	3
	3/32	2.4[d]			
	—	2.5			
	1/8	3.2			
	5/32	4.0	4	1/8	3
	3/16	4.8[d]			
	—	5.0			
ENiCu-7	5/64	2.0	3	3/32	2.5
	3/32	2.4[d]			
	—	2.5			
	1/8	3.2			
	5/32	4.0	4	3/32	2.5
	3/16	4.8[d]			
	—	5.0			
	1/4	6.4[d]			
ENiMo-1, ENiMo-3 ENiMo-7, ENiMo-8 ENiMo-9, ENiMo-10 ENiCrFe-1, ENiCrFe-2 ENiCrFe-4, ENiCrFe-7 ENiCrFe-9, ENiCrFe-10 ENiCrCoMo-1, ENiCrMo-1 ENiCrMo-2, ENiCrMo-3 ENiCrMo-4, ENiCrMo-5 ENiCrMo-6, ENiCrMo-7 ENiCrMo-9, ENiCrMo-10 ENiCrMo-11, ENiCrMo-12 ENiCrMo-13, ENiCrMo-14	5/64	2.0	3	3/32	2.5
	3/32	2.4[d]			
	—	2.5			
	1/8	3.2			
	5/32	4.0			
	3/16	4.8[d]			
	—	5.0			
ENiCrFe-3	5/64	2.0	2	3/32	2.5
	3/32	2.4[d]			
	—	2.5			
	1/8	3.2			
	5/32	4.0			
	3/16	4.8[d]			
	—	5.0			

NOTES:
a. These requirements apply to both side and face-bend specimens.
b. The value shown is the maximum number of fissures permitted in the weld metal on the tension side of each bend specimen. The sizes of the fissures are defined in Note c.
c. The number of fissures referred to in Note b, is for fissures between 1/64 in. [0.4 mm] and the length shown in the last column of the table. Those less than 1/64 in. [0.4 mm] in length and those on the corners of the specimens shall be disregarded. Bend specimens with fissures longer than the length shown do not meet the requirements of this specification.
d. Metric sizes not shown in ISO 544.

TABLE 7
STANDARD SIZES AND LENGTHS

Electrode Size (Core Wire Diameter)		Standard Lengths[a]							
		ENi-1		ENiCu-7		ENiCrFe-1 ENiCrFe-2 ENiCrFe-3 ENiCrFe-4 ENiCrFe-7 ENiCrFe-9 ENiCrFe-10 ENiCrMo-3		ENiMo-1 ENiMo-7 ENiMo-9 ENiCrCoMo-1 ENiCrMo-2 ENiCrMo-5 ENiCrMo-7 ENiCrMo-10 ENiCrMo-12[c] ENiCrMo-14	ENiMo-3 ENiMo-8 ENiMo-10 ENiCrMo-1 ENiCrMo-4 ENiCrMo-6 ENiCrMo-9 ENiCrMo-11 ENiCrMo-13
in.	mm	in.	mm	in.	mm	in.	mm	in.	mm
5/64	2.0	9	230	9	230	9	230	9	230
3/32	2.4[b]	9 or 12	230 or 300	9 or 12	230 or 330	9 or 12	230 or 300	9 or 12	230 or 300
—	2.5	—	250	—	250	—	250	—	250
1/8	3.2	14	350	14	350	12 or 14	300 or 350	14	350
5/32	4.0	14	350	14	350	14	350	14	350
3/16[c]	4.8[b,c]	14	350	14	350	14	350	14	350
—	5.0[c]	—	350	—	350	—	—	—	—
1/4	6.4[b]	—	—	14	350	—	—	—	—

NOTES:
a. Other sizes and lengths shall be as agreed by the purchaser and the supplier.
b. Metric sizes not shown in ISO 544.
c. The 3/16 in. [4.8 or 5.0 mm] diameter is not standard for the ENiCrMo-12 classification.

cross section of the covering is obtained) shall not exceed 1/8 in. [3 mm] or the diameter of the core wire, whichever is less. Electrodes with chipped coverings near the arc end, baring the core wire no more than the lesser of 1/4 in. [6 mm] or twice the diameter of the core wire meet the requirements of this specification, provided no chip uncovers more than 50 percent of the circumference of the core.

18. Electrode Identification

All electrodes shall be identified as follows:

18.1 At least one legible imprint of the electrode classification shall be applied to the electrode covering within 2 1/2 in. [64 mm] of the grip end of the electrode.

18.2 The numbers and letters of the imprint shall be of bold block type of a size large enough to be legible.

18.3 The ink used for imprinting shall provide sufficient contrast with the electrode covering so that in normal use, the numbers and letters are legible both before and after welding.

18.4 The prefix letter "E" in the electrode classification may be omitted from the imprint.

19. Packaging

19.1 Electrodes shall be packaged to protect them from damage during shipment and storage under normal conditions.

19.2 Package weights shall be as agreed upon by supplier and purchaser.

20. Marking of Packages

20.1 The following product information (as a minimum) shall be legibly marked on the outside of each unit package:

(a) AWS specification and classification designations (year of issue may be excluded)

(*b*) Supplier's name and trade designation
(*c*) Size and net weight
(*d*) Lot, control, or heat number

20.2 The following precautionary information (as a minimum) shall be prominently displayed in legible print on all packages of electrodes, including individual unit packages enclosed within a larger package.

WARNING:

PROTECT yourself and others. Read and understand this label.

FUMES and GASES can be hazardous to your health.

ARC RAYS can injure eyes and burn skin.

ELECTRIC SHOCK can KILL.

- Before use, read and understand the manufacturer's instructions, Material Safety Data Sheets (MSDSs), and your employer's safety practices.
- Keep your head out of the fumes.
- Use enough ventilation, exhaust at the arc, or both, to keep fumes and gases away from your breathing zone and the general area.
- Wear correct eye, ear, and body protection.
- Do not touch live electrical parts.
- See American National Standard ANSI/ASC Z49.1, Safety in Welding, Cutting, and Allied Processes, published by the American Welding Society, 550 N.W. LeJeune Road, Miami, FL 33126; and OSHA Safety and Health Standards, 29 CFR 1910, available from the U.S. Government Printing Office, Washington, DC 20402.

DO NOT REMOVE THIS INFORMATION

Annex
Guide to AWS Specification for Nickel and Nickel-Alloy Welding Electrodes for Shielded Metal Arc Welding

(This Annex is not a part of ANSI/AWS A5.11/A5.11M-97, *Specification for Nickel and Nickel-Alloy Welding Electrodes for Shielded Metal Arc Welding*, but is included for information purposes only.)

A1. Introduction

The purpose of this guide is to correlate the electrode classifications with their intended applications so the specification can be used effectively. Reference to appropriate base metal specifications is made whenever that can be done and when it would be helpful. Such references are intended only as examples rather than complete listings of the base metals for which each filler metal is suitable.

A2. Classification System

A2.1 The system for identifying the electrode classifications in this specification follows the standard pattern used in other AWS filler metal specifications. The letter "E" at the beginning of each classification designation stands for electrode.

A2.2 Since the electrodes are classified according to the chemical composition of the weld metal they deposit, the chemical symbol "Ni" appears right after the "E," as a means of identifying the electrodes as nickel-base alloys. The other symbols (Cr, Cu, Fe, Mo, and Co) in the designations are intended to group the electrodes according to their principal alloying elements. The individual designations are made up of these symbols and a number at the end of the designation (ENiMo-1 and ENiMo-3, for example). These numbers separate one composition from another, within a group, and are not repeated within that group.

A2.3 From an application point of view, the electrode classifications in this specification have corresponding classifications in ANSI/AWS A5.14/A5.14M, *Specification for Bare Nickel and Nickel-Alloy Welding Electrodes and Rods*, for those cases in which there is a corresponding application for a bare electrode or rod (ER). Table A1 correlates the covered electrode classifications in this edition with the corresponding ER classification in ANSI/AWS A5.14/A5.14M. It also lists the current designation for each classification as it is given in a prominent and pertinent military specification, when such a designation exists.

A2.4 An international system for designating welding filler metals is under development by the International Institute of Welding (IIW) for use in future specifications to be issued by the International Standards Organization (ISO). Table A1 shows the proposed designations for nickel-alloy filler metals. In that system, the initial "E" designates a covered electrode, the letter "N" the alloy system, followed by a four-digit number. For nickel alloys, the four-digit number is based on the UNS number (see Table 1), one of the five digits of which has been eliminated.

A3. Acceptance

Acceptance of all welding materials classified under this specification is in accordance with ANSI/AWS A5.01, *Filler Metal Procurement Guidelines*, as the specification states. Any testing that a purchaser requires of the supplier, for material shipped in accordance with this specification, should be clearly stated in the purchase order, according to the provisions of ANSI/AWS A5.01. In the absence of any such statement in the purchase order, the supplier may ship the material with whatever testing the supplier normally conducts on material of that classification, as specified in Schedule F, Table 1, of ANSI/AWS A5.01. Testing in accordance with any other Schedule in that Table should be specifically required in the purchase order. In such cases,

TABLE A1
COMPARISON OF CLASSIFICATIONS

Present AWS Classification[a]	UNS Number	Military Designation[c]	Corresponding A5.14/A5.14M[d]	Proposed ISO Designation[e]
ENi-1	W82141	4N11	ERNi-1	EN2061
ENiCu-7	W84190	9N10	ERNiCu-7	EN4060
ENiCrFe-1	W86132	3N12	ERNiCrFe-5	EN6062
ENiCrFe-2	W86133	4N1A	ERNiCrFe-6	EN6092
ENiCrFe-3	W86182	8N12	ERNiCr-3	EN6082
ENiCrFe-4	W86134	—	—	EN6093
ENiCrFe-7[b]	W86152	—	ERNiCrFe-7	—
ENiCrFe-9[b]	W86094	—	—	EN6094
ENiCrFe-10[b]	W86095	—	—	EN6095
ENiMo-1	W80001	3N1B	ERNiMo-1	—
ENiMo-3	W80004	4N1W	ERNiMo-3	—
ENiMo-7	W80665	—	ERNiMo-7	EN1066
ENiMo-8[b]	W80008	—	ERNiMo-8	EN1008
ENiMo-9[b]	W80009	—	ERNiMo-9	EN1009
ENiMo-10[b]	W80675	—	ERNiMo-10	—
ENiCrCoMo-1	W86117	—	ERNiCrCoMo-1	EN6617
ENiCrMo-1	W86007	—	ERNiCrMo-1	—
ENiCrMo-2	W86002	—	ERNiCrMo-2	—
ENiCrMo-3	W86112	1N12	ERNiCrMo-3	EN6625
ENiCrMo-4	W80276	—	ERNiCrMo-4	EN6276
ENiCrMo-5	W80002	3N1C	—	—
ENiCrMo-6	W86620	—	—	EN6620
ENiCrMo-7	W86455	—	ERNiCrMo-7	EN6455
ENiCrMo-9	W86985	—	ERNiCrMo-9	EN6985
ENiCrMo-10	W86022	—	ERNiCrMo-10	EN6022
ENiCrMo-11	W86030	—	ERNiCrMo-11	EN6030
ENiCrMo-12	W86032	—	—	EN6627
ENiCrMo-13[b]	W86059	—	ERNiCrMo-13	EN6059
ENiCrMo-14[b]	W86026	—	ERNiCrMo-14	EN6686

NOTES:
a. ANSI/AWS A5.11/A5.11M-97, *Specification for Nickel and Nickel-Alloy Electrodes for Shielded Metal Arc Welding.*
b. New classification.
c. Designation are from MIL-E-22200/3, *Nickel Base Alloy and Cobalt Base Alloy Covered Welding Electrodes.*
d. ANSI/AWS A5.14/A5.14M-19, *Specification for Bare Nickel and Nickel-Alloy Welding Electrodes.*
e. IIW Doc II-1302-96.

acceptance of the material shipped will be in accordance with those requirements.

A4. Certification

The act of placing the AWS specification and classification designations on the packaging enclosing the product, or the classification on the product itself, constitutes the supplier's (manufacturer's) certification that the product meets all of the requirements of the specification.

The only testing requirement implicit in this certification is that the manufacturer has actually conducted the tests required by the specification on material that is representative of that being shipped and that the material met the requirements of the specification. Representative material, in this case, is any production run of that classification using the same formulation. "Certification" is not to be construed to mean that tests of any kind were necessarily conducted on samples of the specific material shipped. Tests on such material may or may not have been conducted. The basis for the certification required by the specification is the classification test of "representative material" cited above, and the "Manufacturer's Quality Assurance System" in ANSI/AWS A5.01.

A5. Ventilation During Welding

A5.1 The following five major factors govern the quantity of fumes in the atmosphere to which welders and welding operators are exposed during welding:

(a) Dimensions of the space in which welding is done (with special regard to the height of the ceiling);

(b) Number of welders and welding operators working in that space;

(c) Rate of evolution of fumes, gases, or dust, according to the materials and processes involved;

(d) The proximity of the welders or welding operators to the fumes as they issue from the welding zone, and to the gases and dust in the space in which they are working;

(e) The ventilation provided to the space in which the welding is done.

A5.2 American National Standard ANSI/ASC Z49.1, *Safety in Welding, Cutting, and Allied Processes* (published by the American Welding Society), discusses the ventilation that is required during welding and should be referred to for details. Attention is drawn particularly to the section of that document dealing with ventilation.

A6. Welding Considerations

A6.1 Before welding or heating any nickel-base alloy, the material must be clean. Oil, grease, paint, lubricants, marking pencils, temperature-indicating materials, threading compounds, and other such materials frequently contain sulfur, lead, or silver, which may cause cracking (embrittlement) of the base metal or the weld metal if present during welding or heating.

A6.2 Electrodes of some of the classifications are used for dissimilar metal welds. When making such welds, it is important to obtain as little dilution as possible from the dissimilar metal member (steel, for example). This can be done by traveling slowly to deposit a thicker bead and to dissipate the energy of the arc against the molten weld metal or the nickel base metal, rather than the dissimilar metal member.

A6.3 Most of the electrodes in this specification are intended to be used with DCEP (Direct Current, Electrode Positive) polarity. Some electrodes may be designed to also operate on alternating current which makes them desirable for minimizing arc blow. The electrode manufacturer should be consulted to determine if the particular product is designed to be used with alternating current.

A7. Description and Intended Use of Electrodes

A7.1 ENi-1 Classification. The nominal composition (wt.-%) of weld metal produced by electrodes of this classification is 95 Ni, 2.5 Ti. Electrodes of this classification are used for welding wrought and cast forms of commercially pure nickel to themselves and to steel (i.e., joining nickel to steel and surfacing steel with nickel). Typical specifications for this nickel base metal are ASTM B160, B161, B162, and B163, all of which have UNS Numbers N02200 or N02201. Electrodes through the $\frac{1}{8}$ in. [3.2 mm] size can be used in all positions. Electrodes larger than that are used only in the horizontal and flat positions.

A7.2 ENiCu-7 Classification. The nominal composition (wt-%) of weld metal produced by electrodes of this classification is 66 Ni, 30 Cu, 3 Mn, 1 Fe. Electrodes of this classification are used for welding nickel-copper alloys to themselves and to steel, for welding the clad side of joints in steel clad with a nickel-copper alloy, and for surfacing steel with nickel-copper alloy weld metal. Typical specifications for the nickel-copper base metal are ASTM B127, B163, B164, B165, all of which have UNS Number N04400.

Electrodes through the $\frac{1}{8}$ in. [3.2 mm] size can be used in all positions. Electrodes larger than that are used only in the flat and horizontal positions. The weld metal is suitable for service both in the as-welded condition and after an appropriate postweld heat treatment. Qualification tests should be conducted beforehand to make certain the necessary properties can be obtained after the particular heat treatment is employed.

A7.3 ENiCrFe-X Classifications

A7.3.1 ENiCrFe-1. The nominal composition (wt.-%) of weld metal produced by electrodes of this classification is 70 Ni, 15 Cr, 8 Fe, 3.5 Mn, 2.5 Nb (Cb) plus Ta. Electrodes of this classification are used for welding nickel-chromium-iron alloys, for the clad side of joints in steel clad with nickel-chromium-iron alloy, and for surfacing steel with nickel-chromium-iron weld metal. The electrodes may be used for applications at temperatures ranging from cryogenic to around 1800°F [980°C]. However, for temperatures above 1500°F [820°C], weld metal produced by these electrodes does not exhibit optimum oxidation resistance and strength. These electrodes are also suitable for joining steel to nickel-base alloys. Typical specifications for the nickel-chromium-iron base metal are ASTM B163, B166, B167, and B168, all of which have UNS Number N06600. Electrodes through the $\frac{1}{8}$ in. [3.2 mm] size can be used in all positions. Electrodes larger than that are used only in the horizontal and flat positions.

A7.3.2 ENiCrFe-2. The nominal composition (wt.-%) of weld metal produced by electrodes of this classification is 70 Ni, 15 Cr, 8 Fe, 2 Mn, 2 Nb plus

Ta, 1.5 Mo. Electrodes of this classification are used for welding nickel-chromium-iron alloys, 9 percent nickel steel, and a variety of dissimilar metal joints (involving carbon steel, stainless steel, nickel, and nickel-base alloys). The base metals can be wrought or cast (welding grade), or both. The electrodes may be used for applications at temperatures ranging from cryogenic to around 1800°F [980°C]. However, for temperatures above 1500°F [820°C], weld metal produced by ENiCrFe-2 does not exhibit optimum oxidation resistance and strength. Typical specifications for the nickel-chromium-iron base metal are ASTM B163, B166, B167, and B168, all of which have UNS Number N06600. Electrodes through the $\frac{1}{8}$ in. [3.2 mm] size can be used in all positions. Electrodes larger than that are used only in the horizontal and flat positions.

A7.3.3 ENiCrFe-3. The nominal composition (wt.-%) of weld metal produced by electrodes of this classification is 65 Ni, 15 Cr, 8 Fe, 7.5 Mn, 2 Nb plus Ta. Electrodes of this classification are used for welding nickel-chromium-iron alloys, for welding the clad side of joints on steel clad with nickel-chromium-iron alloy, and for surfacing steel with nickel-chromium-iron weld metal, when comparatively high manganese contents are not detrimental. The electrode may be used for applications at temperatures ranging from cryogenic to about 900°F [480°C]. Typical specifications for the nickel-chromium-iron base metal are ASTM B163, B166, B167, and B168, all of which have UNS Number N06600.

These electrodes can also be used for welding steel to other nickel-base alloys. Fewer fissures are permitted on the bend test for this weld metal than for weld metal of the ENiCrFe-1 and ENiCrFe-2 classifications. Electrodes through the $\frac{1}{8}$ in. [3.2 mm] size can be used for welding in all positions. Electrodes larger than that are used only in the horizontal and flat positions.

A7.3.4 ENiCrFe-4. The nominal composition (wt.-%) of weld metal produced by electrodes of this classification is 70 Ni, 15 Cr, 8 Fe, 2.5 Mn, 2.5 Nb plus Ta, 2.5 Mo. Electrodes of this classification are used for welding 9 percent nickel steel. Typical specifications for the 9 percent nickel steel base metal are ASTM A333, A334, A353, A522, and A553, all of which have UNS Number K81340. The strength of the weld metal is higher than that of the ENiCrFe-2 classification.

A7.3.5 ENiCrFe-7. The nominal composition (wt.-%) of weld metal produced by electrodes of this classification is 55 Ni, 29 Cr, 9.5 Fe, 3 Mn, 1.5 Nb plus Ta. Electrodes of this classification are used for welding the nickel-chromium-iron alloy of the UNS Number N06690. Typical specifications for the nickel-chromium-iron base metal are ASTM B166, B167, and B168. The electrodes may also be used for the welding of nickel-chromium-iron alloys to steels and stainless steels, and for corrosion-resistant overlays on steels. Electrodes through the $\frac{1}{8}$ in [3.2 mm] size can be used in all positions. Electrodes larger than that are used only in the flat and horizontal positions.

A7.3.6 ENiCrFe-9. The nominal composition (wt.-%) of electrodes of this classification is 70 Ni, 14 Cr, 9 Fe, 1.5 Nb plus Ta, 4 Mo. Electrodes of this classification are used for welding 9 percent nickel steel. Typical specifications for the 9 percent nickel steel base metal are ASTM A333, A334, A353, A522, and A553, all of which have UNS Number K81340. Electrodes through the $\frac{5}{32}$ in. [4.0 mm] size can be used for welding in all positions. Electrodes larger than that are used only in the flat and horizontal positions.

A7.3.7 ENiCrFe-10. The nominal composition (wt.-%) of electrodes of this classification is 65 Ni, 15 Cr, 10 Fe, 1.5 Nb plus Ta, 3 Mo, 2 W. Electrodes of this classification are used for welding 9 percent nickel steel. Typical specifications for the 9 percent nickel steel base metal are ASTM A333, A334, A353, A522, and A553, all of which have UNS Number K81340. Electrodes through the $\frac{5}{32}$ in. [4.0 mm] size can be used for welding in all positions. Electrodes larger than that are used only in the flat and horizontal positions.

A7.4 ENiMo-X Classifications

A7.4.1 ENiMo-1. The nominal composition (wt.-%) of weld metal produced by electrodes of this classification is 67 Ni, 28 Mo, 5 Fe. Electrodes of the ENiMo-1 classification are used for welding nickel-molybdenum alloys as well as the clad side of joints in steel clad with a nickel-molybdenum alloy and for welding nickel-molybdenum alloys to steel and to other nickel-base alloys. Typical specifications for the nickel-molybdenum base metal are ASTM B333, B335, B619, B622, and B626, all of which have UNS Number N10001. ENiMo-1 electrodes normally are used only in the flat position.

A7.4.2 ENiMo-3. The nominal composition (wt.-%) of weld metal produced by electrodes of this classification is 63 Ni, 25 Mo, 5.5 Fe, 4 Cr. Electrodes of the ENiMo-3 classification are used for welding dissimilar metal combinations of nickel-, cobalt-, and iron-base alloys. These electrodes normally are used only in the flat position.

A7.4.3 ENiMo-7. The nominal composition (wt.-%) of weld metal produced by electrodes of this classification is 69 Ni, 28 Mo, 1.5 Fe, 1.5 Mn. Electrodes of the ENiMo-7 classification have controlled low levels of carbon, iron, and cobalt and are used for welding nickel-molybdenum alloys, for welding the clad side of joints in steel clad with a nickel-molybdenum alloy, and for welding nickel-molybdenum alloys to steel and to other nickel-base alloys. Typical specifications for the nickel-molybdenum base metals are ASTM B333, B335, B619, B622, and B626, all of which have UNS Number N10665. These electrodes normally are used only in the flat position.

A7.4.4 ENiMo-8. The nominal composition (wt.-%) of electrodes of this classification is 70 Ni, 18 Mo, 7 Fe, 3 W, 2 Cr. Electrodes of this classification are used for welding 9 percent nickel steel, but they can be used in other applications as well. Typical specifications for the 9 percent nickel steel base metal are ASTM A333, A334, A353, A522, and A553, all of which have UNS Number K81340. Electrodes through the $^{5}/_{32}$ in. [4.0 mm] size can be used for welding in all positions. Electrodes larger than that are used only in the flat and horizontal positions.

A7.4.5 ENiMo-9. The nominal composition (wt.-%) of electrodes of this classification is 70 Ni, 19 Mo, 3 Fe, 3 W, 1 Cu. Electrodes of this classification are used for welding 9 percent nickel steel, but they can be used in other applications as well. Typical specifications for the 9 percent nickel steel base metal are ASTM A333, A334, A353, A522, and A553, all of which have UNS Number K81340. Electrodes through the $^{5}/_{32}$ in. [4.0 mm] size can be used for welding in all positions. Electrodes larger than that are used only in the flat and horizontal positions.

A7.4.6 ENiMo-10. The nominal composition (wt.-%) of weld metal produced by electrodes of this classification is 69 Ni, 28 Mo, 1.5 Cr, 1.5 Fe and low levels of carbon. The filler materials are used for welding nickel-molybdenum alloys (UNS numbers N10665 and N10675), for welding the clad side of joints in steel clad with a nickel-molybdenum alloy, and for welding nickel-molybdenum alloys to steel and to other nickel-base alloys. Typical specifications for the nickel-molybdenum base metals are ASTM B333, B335, B366, B564, B619, B622, and B626. These coated electrodes are normally used in the flat position.

A7.5 ENiCrCoMo-1 Classification

The nominal composition (wt.-%) of weld metal produced by electrodes of this classification is 52 Ni, 23 Cr, 12 Co, 9 Mo, 2 Fe, 1.5 Mn. Electrodes of the ENiCrCoMo-1 classification are used for welding nickel-chromium-cobalt-molybdenum alloys (UNS No. N06617) to themselves and to steel and for surfacing steel with nickel-chromium-cobalt-molybdenum weld metal. The electrodes are also used for applications where optimum strength and oxidation resistance are required above 1500°F [820°C] up to 2100°F [1150°C], especially when welding on base metals of nickel-iron-chromium alloys. Electrodes through the $^{1}/_{8}$ in. [3.2 mm] size can be used for welding in all positions. Larger electrodes are used for welding in the flat or horizontal positions.

A7.6 ENiCrMo-X Classifications

A7.6.1 ENiCrMo-1. The nominal composition (wt.-%) of weld metal produced by electrodes of this classification is 43 Ni, 22 Cr, 19.5 Fe, 6.5 Mo, 2 Nb plus Ta, 2 Cu, 1.5 Mn. Electrodes of this classification are used for welding nickel-chromium-molybdenum alloys, for welding the clad side of joints in steel clad with nickel-chromium-molybdenum alloy, and for welding nickel-chromium-molybdenum alloy to steel and to other nickel-base alloys. Typical specifications for the nickel-chromium-molybdenum base metals are ASTM B581, B582, B619, and B622, all of which have UNS Number N06007. These electrodes normally are used only in the flat position.

A7.6.2 ENiCrMo-2. The nominal composition (wt.-%) of weld metal produced by electrodes of this classification is 47 Ni, 22 Cr, 18 Fe, 9 Mo, 1.5 Co. Electrodes of this classification are used for welding nickel-chromium-molybdenum alloys, for welding the clad side of joints in steel clad with nickel-chromium-molybdenum alloy, and for welding nickel-chromium-molybdenum alloys to steel and to other nickel-base alloys. Typical specifications for the nickel-chromium-molybdenum base metals are ASTM B435, B572, B619, B622, and B626, all of which have UNS Number N06002. These electrodes normally are used only in the flat position.

A7.6.3 ENiCrMo-3. The nominal composition (wt.-%) of weld metal produced by electrodes of this classification is 60 Ni, 22 Cr, 9 Mo, 5 Fe, 3.5 Nb plus Ta. Electrodes of the ENiCrMo-3 classification are used for welding nickel-chromium-molybdenum alloys to themselves and to steel, and for surfacing steel with nickel-chromium-molybdenum weld metal. These electrodes also can be used for welding nickel-base alloys to steel. The electrodes are used in applications where the temperature ranges from cryogenic to 1000°F [540°C]. Typical specifications for the nickel-chromium-molybdenum base metals are ASTM B443,

B444, and B446, all of which have UNS Number N06625. Electrodes through the 1/8 in. [3.2 mm] size can be used for welding in all positions. Electrodes larger than that are used only in the flat and horizontal positions.

A7.6.4 ENiCrMo-4. The nominal composition (wt.-%) of weld metal produced by electrodes of this classification is 57 Ni, 16 Mo, 15.5 Cr, 5.5 Fe, 4 W, low C. Electrodes of this classification are used for welding low-carbon nickel-chromium-molybdenum alloy, for welding the clad side of joints in steel clad with low-carbon nickel-chromium-molybdenum alloy, and for welding low-carbon nickel-chromium-molybdenum alloy to steel and to other nickel-base alloys. Typical specifications for the nickel-chromium-molybdenum base metals are ASTM B574, B575, B619, B622, and B626, all of which have UNS Number N10276. These electrodes normally are used only in the flat position.

A7.6.5 ENiCrMo-5. The nominal composition (wt.-%) of weld metal produced by electrodes of this classification is 53 Ni, 16 Mo, 15.5 Cr, 5.5 Fe, 4 W. Electrodes of this classification are used for surfacing steel clad with a nickel-chromium-molybdenum alloy. These electrodes normally are used only in the flat position.

A7.6.6 ENiCrMo-6. The nominal composition (wt.-%) of weld metal produced by electrodes of this classification is 65 Ni, 14.5 Cr, 7 Fe, 7 Mo, 3 Mn, 1.5 W, 1.5 Nb plus Ta. Electrodes of this classification are used for welding 9 percent nickel steel, but they can be used in other applications as well. Typical specifications for the 9 percent nickel steel base metal are ASTM A333, A334, A353, A522, and A553, all of which have UNS Number K81340. Electrodes through the 1/8 in. [3.2 mm] size can be used for welding in all positions. Electrodes larger than that are used only in the flat and horizontal positions.

A7.6.7 ENiCrMo-7. The nominal composition (wt.-%) of weld metal produced by electrodes of this classification is 65 Ni, 16 Cr, 15.5 Mo, 1.5 Fe. Electrodes of this classification are used for welding nickel-chromium-molybdenum alloy, for the welding of the clad side of joints in steel clad with nickel-chromium-molybdenum alloy, and for joining nickel-chromium-molybdenum alloys to steel and to other nickel-base alloys. Typical specifications for the nickel-chromium-molybdenum base metals are ASTM B574, B575, B619, B622, and B626, all of which have UNS Number N06455. These electrodes normally are used only in the flat position.

A7.6.8 ENiCrMo-9. The nominal composition (wt.-%) of weld metal produced by electrodes of this classification is 44 Ni, 22 Cr, 19.5 Fe, 7 Mo, 2 Co, 2 Cu. Electrodes of this classification are used for welding nickel-chromium-molybdenum alloys, for the welding of the clad side of joints in steel clad with nickel-chromium-molybdenum alloys, and for joining nickel-chromium-molybdenum alloys to steel and to other nickel-base alloys. Typical specifications for the nickel-chromium-molybdenum base metal are ASTM B581, B582, B619, B622, and B626, all of which have UNS Number N06985. These electrodes normally are used only in the flat position.

A7.6.9 ENiCrMo-10. The nominal composition (wt.-%) of weld metal produced by electrodes of this classification is 56 Ni, 22 Cr, 13 Mo, 4 Fe, 3 W. Electrodes of this classification are used for welding nickel-chromium-molybdenum alloys, for the welding of the clad side of joints in steel clad with nickel-chromium-molybdenum alloy, to steel and to their nickel-base alloys; and for joining nickel-chromium-molybdenum alloys. Typical specifications for the nickel-chromium-molybdenum base metals are ASTM B574, B575, B619, B622, and B626, all of which have UNS Number N06022. Electrodes through the 1/8 in. [3.2 mm] size can be used for welding in all positions. Electrodes larger than that are used only in the flat position.

A7.6.10 ENiCrMo-11. The nominal composition (wt.-%) of weld metal produced by electrodes of this classification is 43 Ni, 30 Cr, 15 Fe, 5 Mo, 2 Co, 3 W, 2 Cu. Electrodes of this classification are used for welding nickel-chromium-molybdenum alloys, for the welding of the clad side of joints in steel clad with nickel-chromium-molybdenum alloys, and for joining nickel-chromium-molybdenum alloys to steel and to other nickel-base alloys. Typical specifications for the nickel-chromium-molybdenum base metal are ASTM B581, B582, B619, B622, and B626, all of which have UNS Number N06030. These electrodes normally are used only in the flat position.

A7.6.11 ENiCrMo-12. The nominal composition (wt.-%) of weld metal produced by electrodes of this classification is 58 Ni, 21.5 Cr, 9.5 Mo, 3 Fe, 2 Nb plus Ta. Electrodes of this classification are used for welding chromium-nickel-molybdenum austenitic stainless steels to themselves, to duplex ferritic-austenitic stainless steels, to nickel-chromium-molybdenum alloys, and to steel. The ENiCrMo-12 composition is balanced to provide corrosion-resistant welds for use at temperatures below the creep range of highly alloyed austenitic

stainless steels. Typical specifications for the chromium-nickel-molybdenum stainless steel base metals are A240, A167, A182, A249, A276, A312, A358, A473, and A479, most particularly the grade UNS S31254 contained in those specifications. Electrodes through the 1/8 in. [3.2 mm] size can be used for welding in all positions. Electrodes larger than that can be used only for welding in the flat and horizontal positions.

A7.6.12 ENiCrMo-13. The nominal composition (wt.-%) of weld metal produced by electrodes of this classification is 59 Ni, 23 Cr, 16 Mo, 1 Fe, low carbon. Electrodes of this classification are used to weld low-carbon nickel-chromium-molybdenum alloys, for welding the clad side of joints in steel clad with low-carbon nickel-chromium-molybdenum alloys, and for welding low carbon nickel-chromium-molybdenum alloy to steel and to other nickel-base alloys. Typical specifications for the nickel-chromium-molybdenum base metals are ASTM B574, B575, B619, B622, and B626, all of which have UNS Number N06059.

A7.6.13 ENiCrMo-14. The nominal composition (wt.-%) of weld metal produced by electrodes of this classification is 57 Ni, 21 Cr, 16 Mo, 4 W. Electrodes of this classification are used to weld nickel-chromium-molybdenum alloys (UNS Numbers N06686, N06625, N10276, and N06022) that are used in severe corrosion applications where resistance to reducing, oxidizing, crevice and pitting conditions is required. It is recommended for corrosion-resistant overlay cladding of iron-base metals for the same environments.

A8. Special Tests

It is recognized that supplementary tests may be required for certain applications. In such cases, tests to determine specific properties such as corrosion resistance, scaling resistance, or strength at elevated or cryogenic temperatures may be required.

ANSI/AWS A5.01 contains provisions for ordering such tests. This section is included for the guidance of those who desire to specify such special tests. Those tests may be conducted as agreed upon between supplier and purchaser.

A8.1 Corrosion or Scaling Tests

A8.1.1 Although welds with electrodes in this specification are commonly used in corrosion and heat-resisting applications, tests for those properties are not included in the specification. When required for a particular application, tests can be conducted on specimens taken from either a weld pad or a welded joint. Specimens from a joint are suitable for qualifying the welding procedure (for a specific application involving corrosion or oxidation resistance), but not for qualifying the electrode.

Tests on specimens from a joint have the disadvantage of being a combined test of the properties of the weld metal, the heat-affected zone, and the unaffected base metal. With them, it is more difficult to obtain reproducible data (when a difference exists in the properties of the metal in the various parts of the specimen). Specimens taken from a joint have the advantage of being able to duplicate the joint design and the welding sequence planned for fabrication.

A8.1.2 Specimens for testing corrosion or oxidation resistance of the weld metal alone are prepared by following the procedure outlined in 9.3 of the specification. The pad size should be at least 3/4 in. [19 mm] in height × 2 1/2 in. [65 mm] by (1 + 0.625 n) in. [25 + 16n mm], where "n" represents a multiplying factor for the number of specimens required from the pad. Specimens measuring 1/2 by 2 × 1/4 in. [13 by 50 by 6 mm] are machined from the top of the pad in a manner such that the 2 in. [50 mm] dimension of the specimen is parallel to the 2 1/2 in. [65 mm] dimension of the pad and the 1/2 in. [13 mm] dimension is parallel with the length of the pad.

A8.1.3 The heat treatment, surface finish, and marking of the specimens prior to testing should be in accordance with standard practices for tests of similar alloys in the wrought or cast forms. The testing procedures should correspond to *Recommended Practice G4 for Conducting Plant Corrosion Tests* (published by ASTM).

A9. Discontinued Classifications

Some classifications have been discontinued from one revision of this specification to another. This results either from changes in commercial practice or changes in the classification system used in the specification. The classifications that have been discontinued are listed in Table A2, along with the year in which they were last included in the specification.

A10. Safety Considerations

A10.1 Burn Protection. Molten metal, sparks, slag, and hot work surfaces are produced by welding, cutting, and allied processes. These can cause burns if precautionary measures are not used. Workers should wear protective clothing made of fire-resistant material. Pant cuffs, open pockets, or other places on clothing that can catch and retain molten metal or sparks should

TABLE A2
DISCONTINUED CLASSIFICATIONS

Discontinued Classification	Year Last Published
ENiCu-1	1969
ENiCu-2	1969
ENiCu-3	1964
ENiCu-4	1969
ENiCr-1	1969
ENiMo-2[a]	1964
ENiMoCr-1[b]	1969
ENiCuAl-1	1969

NOTES:
a. Reclassified as ENiMoCr-1 in 1969.
b. Reclassified as ENiCrMo-5 in 1976.

not be worn. High-top shoes or leather leggings and fire-resistant gloves should be worn. Pant legs should be worn over the outside of high-top shoes. Helmets or hand shields that provide protection for the face, neck, and ears, and a head covering to protect the head should be used. In addition, appropriate eye protection should be used.

When welding overhead or in confined spaces, ear plugs to prevent weld spatter from entering the ear canal should be worn in combination with goggles, or the equivalent, to give added eye protection. Clothing should be kept free of grease and oil. Combustible materials should not be carried in pockets. If any combustible substance has been spilled on clothing, a change to clean, fire-resistant clothing should be made before working with open arcs or flames. Aprons, cape sleeves, leggings, and shoulder covers with bibs designed for welding service should be used. Where welding or cutting of unusually thick base metal is involved, sheet metal shields should be used for extra protection. Mechanization of highly hazardous processes or jobs should be considered. Other personnel in the work area should be protected by the use of noncombustible screens or by the use of appropriate protection as described in the previous paragraph. Before leaving a work area, hot workpieces should be marked to alert other persons of this hazard. No attempt should be made to repair or disconnect electrical equipment when it is under load; disconnection under load produces arcing of the contacts and may cause burns or shock, or both. *(Note: Burns can be caused by touching hot equipment such as electrode holders, tips, and nozzles. Therefore, insulated gloves should be worn when these items are handled, unless an adequate cooling period has been allowed before touching.)*

The following references are for more detailed information on personal protection:

(a) American National Standards Institute. ANSI/ASC Z87.1, *Practice for Occupational and Educational Eye and Face Protection.* New York: American National Standards Institute.[6]

(b) American National Standards Institute. ANSI/ASC Z41.1, *Safety-Toe Footwear.* New York: American National Standards Institute.

(c) American Welding Society. ANSI/ASC Z49.1, *Safety in Welding, Cutting, and Allied Processes.* Miami, FL: American Welding Society.[7]

(d) OSHA. *Code of Federal Regulations,* Title 29—Labor, Chapter XVII, Part 1910. Washington, DC: U.S. Government Printing Office.[8]

A10.2 Electrical Hazards. Electric shock can kill. However, it can be avoided. Live electrical parts should not be touched. The manufacturer's instructions and recommended safe practices should be read and understood. Faulty installation, improper grounding, and incorrect operation and maintenance of electrical equipment are all sources of danger.

All electrical equipment and the workpieces should be grounded. The workpiece lead is not a ground lead; it is used only to complete the welding circuit. A separate connection is required to ground the workpiece.

The correct cable size should be used since sustained overloading will cause cable failure and can result in possible electrical shock or fire hazard. All electrical connections should be tight, clean, and dry. Poor connections can overheat and even melt. Further, they can produce dangerous arcs and sparks. Water, grease, or dirt should not be allowed to accumulate on plugs, sockets, or electrical units. Moisture can conduct electricity. To prevent shock, the work area, equipment, and clothing should be kept dry at all times. Welders should wear dry gloves and rubber soled shoes, or stand on a dry board or insulated platform. Cables and connections should be kept in good condition. Improper or worn electrical connections may create conditions that could cause electrical shock or short circuits. Worn, damaged, or bare cables should not be used. Open circuit voltage should be avoided. When several welders are working with arcs of different polarities, or when a number of alternating current machines are being used, the open circuit voltages can be additive. The added voltages increase the severity of the shock hazard.

[6] ANSI standards may be obtained from the American National Standards Institute, 11 West 42 Street, New York, NY 10036.

[7] AWS standards may be obtained from the American Welding Society, 550 N.W. LeJeune Road, Miami, FL 33126.

[8] OSHA standards may be obtained from the U.S. Government Printing Office, Washington, DC 20402.

In case of electric shock, the power should be turned off. If the rescuer must resort to pulling the victim from the live contact, nonconducting materials should be used. If the victim is not breathing, cardiopulmonary resuscitation (CPR) should be administered as soon as contact with the electrical source is broken. A physician should be called and CPR continued until breathing has been restored, or until a physician has arrived. Electrical burns are treated as thermal burns; that is, clean, cold (iced) compresses should be applied. Contamination should be avoided; the area should be covered with a clean, dry dressing; and the patient should be transported to medical assistance.

Recognized safety standards such as ANSI/ASC Z49.1, *Safety in Welding, Cutting, and Allied Processes,* and NFPA No. 70, *The National Electrical Code,* should be followed.[9]

A10.3 Fumes and Gases. Many welding, cutting, and allied processes produce fumes and gases which may be harmful to health. Fumes are solid particles which originate from welding filler metals and fluxes, the base metal, and any coatings present on the base metal. Gases are produced during the welding process or may be produced by the effects of process radiation on the surrounding environment. Management, welders, and other personnel should be aware of the effects of these fumes and gases. The amount and composition of these fumes and gases depend upon the composition of the filler metal and base metal, welding process, current level, arc length, and other factors.

The possible effects of overexposure range from irritation of eyes, skin, and respiratory system to more severe complications. Effects may occur immediately or at some later time. Fumes can cause symptoms such as nausea, headaches, dizziness, and metal fume fever. The possibility of more serious health effects exists when especially toxic materials are involved. In confined spaces, the shielding gases and fumes might displace breathing air and cause asphyxiation. One's head should always be kept out of the fumes. Sufficient ventilation, exhaust at the arc, or both, should be used to keep fumes and gases from your breathing zone and the general area.

In some cases, natural air movement will provide enough ventilation. Where ventilation may be questionable, air sampling should be used to determine if corrective measures should be applied.

More detailed information on fumes and gases produced by the various welding processes may be found in the following:

(a) The permissible exposure limits required by OSHA can be found in *Code of Federal Regulations,* Title 29 — Labor, Chapter XVII, Part 1910.

(b) The recommended threshold limit values for these fumes and gases may be found in *Threshold Limit Values for Chemical Substances and Physical Agents in the Workroom Environment* published by the American Conference of Governmental Industrial Hygienists (ACGIH).[10]

(c) The results of an AWS-funded study are available in a report entitled, *Fumes and Gases in the Welding Environment.*

A10.4 Radiation. Welding, cutting, and allied operations may produce radiant energy (radiation) harmful to health. One should become acquainted with the effects of this radiant energy.

Radiant energy may be ionizing (such as x-rays), or nonionizing (such as ultraviolet, visible light, or infrared). Radiation can produce a variety of effects such as skin burns and eye damage, depending on the radiant energy's wavelength and intensity, if excessive exposure occurs.

A10.4.1 Ionizing Radiation. Ionizing radiation is produced by the electron beam welding process. It is ordinarily controlled within acceptance limits by use of suitable shielding enclosing the welding area.

A10.4.2 Nonionizing Radiation. The intensity and wavelengths of nonionizing radiant energy produced depend on many factors, such as the process, welding parameters, electrode and base metal composition, fluxes, and any coating or plating on the base metal. Some processes such as resistance welding and cold pressure welding ordinarily produce negligible quantities of radiant energy. However, most arc welding and cutting processes (except submerged arc when used properly), laser beam welding and torch welding, cutting, brazing, or soldering can produce quantities of nonionizing radiation such that precautionary measures are necessary.

Protection from possible harmful effects caused by nonionizing radiant energy from welding include the following measures:

(a) One should not look at welding arcs except through welding filter plates which meet the require-

[9] NFPA documents are available from the National Fire Protection Association, 1 Batterymarch Park, Quincy, MA 02269

[10] ACGIH documents are available from the American Conference of Governmental Industrial Hygienists, 1330 Kemper Meadow Drive, Suite 600, Cincinnati, OH 45240-1634.

ments of ANSI/ASC Z87.1, *Practice for Occupational and Educational Eye and Face Protection.* It should be noted that transparent welding curtains are not intended as welding filter plates, but rather are intended to protect passersby from incidental exposure.

(b) Exposed skin should be protected with adequate gloves and clothing as specified in ANSI/ASC Z49.1.

(c) Reflections from welding arcs should be avoided, and all personnel should be protected from intense reflections. *(Note: Paints using pigments of substantially zinc oxide or titanium dioxide have a lower reflectance for ultraviolet radiation.)*

(d) Screens, curtains, or adequate distance from aisles, walkways, etc., should be used to avoid exposing passersby to welding operations.

(e) Safety glasses with UV-protective side shields have been shown to provide some beneficial protection from ultraviolet radiation produced by welding arcs.

A10.4.3 Ionizing radiation information sources include the following:

(a) American Welding Society. AWS F2.1-78, *Recommended Safe Practices for Electron Beam Welding and Cutting.* Miami, FL: American Welding Society.

(b) Manufacturer's product information literature.

A10.4.4 Nonionizing radiation information sources include:

(a) American National Standards Institute. ANSI/ASC Z136.1, *Safe Use of Lasers.* New York: American National Standards Institute.

(b) American National Standards Institute. ANSI/ASC Z87.1, *Practice for Occupational and Educational Eye and Face Protection.* New York: American National Standards Institute.

(c) American Welding Society. ANSI/ASC Z49.1, *Safety in Welding, Cutting, and Allied Processes.* Miami, FL: American Welding Society.

(d) Hinrichs, J. F. "Project Committee on Radiation-Summary Report." *Welding Journal* 57(1): 62–65, 1978.

(e) Marshall, W. J., Sliney, D. H., et al. "Optical radiation levels produced by air-carbon arc cutting processes." *Welding Journal* 59(3): 43–46, 1980.

(f) Moss, C. E., and Murray, W. E. "Optical radiation levels produced in gas welding, torch brazing, and oxygen cutting." *Welding Journal* 58(9):37–46, 1979.

(g) Moss, C. E. "Optical radiation transmission levels through transparent welding curtains." *Welding Journal* 58(3):69-s to 75-s, 1979.

(h) National Technical Information Service. Nonionizing Radiation Protection Special Study No. 42-0053-77, *Evaluation of the Potential Hazards from Actinic Ultraviolet Radiation Generated by Electric Welding and Cutting Arcs.* Springfield, VA: National Technical Information Service.[11]

(i) National Technical Information Service. Nonionizing Radiation Protection Special Study No. 42-0312-77, *Evaluation of the Potential Retina Hazards from Optical Radiation Generated by Electrical Welding and Cutting Arcs.* Springfield, VA: National Technical Information Service.

---

[11] National Technical Information documents are available from the National Technical Information Service, Springfield, VA 22161.

SPECIFICATION FOR TUNGSTEN AND TUNGSTEN-ALLOY ELECTRODES FOR ARC WELDING AND CUTTING

SFA-5.12

(Identical with AWS Specification A5.12/A5.12M-98)

1. Scope

This specification prescribes the requirements for the classification of bare tungsten and tungsten-alloy electrodes for gas tungsten arc welding and cutting and plasma arc welding and cutting.

PART A — GENERAL REQUIREMENTS

2. Normative References

2.1 The following ANSI/AWS standards[1] are referenced in the mandatory sections of this document:

(a) ANSI/AWS A1.1, *Metric Procedure Guide for the Welding Industry.*

(b) ANSI/AWS A5.01, *Filler Metal Procurement Guidelines.*

(c) ANSI/ASC Z49.1, *Safety in Welding, Cutting, and Allied Processes* (published by AWS).

2.2 The following ASTM standards[2] are referenced in the mandatory sections of this document:

(a) ASTM F288, *Specification for Tungsten Wire for Electron Devices and Lamps.*

(b) ASTM E29, *Practice for Using Significant Digits in Test Data to Determine Conformance with Specifications.*

2.3 The following ISO standard[3] is referenced in the mandatory section of this document:

(a) ISO 6848, *Tungsten Electrodes for Inert Gas Shielded Arc Welding and for Plasma Cutting and Welding.*

3. Classification

3.1 The tungsten and tungsten-alloy electrodes covered by this specification are classified using a system that is independent of the U.S. Customary Units and the International System of Units (SI). Classification is according to the chemical composition of the electrode as specified in Table 1. See Annex A7 for classification descriptions.

3.2 Electrodes classified under one classification shall not be classified under any other classification in this specification.

3.3 No electrode meeting the requirements of any other classification, shall be classified under EWG.

3.4 The electrodes classified under this specification are intended for gas tungsten arc welding (GTAW), gas tungsten arc cutting (GTAC), plasma arc welding (PAW) or plasma arc cutting (PAC), but that is not to prohibit their use with any other process for which they are found suitable.

[1] AWS Standards can be obtained from the American Welding Society, 550 N.W. LeJeune Road, Miami, FL 33126.

[2] ASTM Standards may be obtained from the American Society for Testing and Materials, 100 Barr Harbor Drive, West Conshohocken, PA 19428-2959.

[3] ISO Standards may be obtained from The American National Standards Institute (ANSI), 11 West 42nd Street, New York, NY 10036.

TABLE 1
CHEMICAL COMPOSITION REQUIREMENTS FOR ELECTRODES[a]

AWS Classification	UNS Number[b]	Weight Percent					
		W Min. (difference)[c]	CeO_2	La_2O_3	ThO_2	ZrO_2	Other Oxides Or Elements, Total
EWP[e]	R07900	99.5	—	—	—	—	0.5
EWCe-2[e]	R07932	97.3	1.8–2.2	—	—	—	0.5
EWLa-1[e]	R07941	98.3	—	0.8–1.2	—	—	0.5
EWLa-1.5	R97942	97.8	—	1.3–1.7	—	—	0.5
EWLa-2	R07943	97.3	—	1.8–2.2	—	—	0.5
EWTh-1[e]	R07911	98.3	—	—	0.8–1.2	—	0.5
EWTh-2[e]	R07912	97.3	—	—	1.7–2.2	—	0.5
EWZr-1[e]	R07920	99.1	—	—	—	0.15–0.40	0.5
EWG[d]	—	94.5	---------- NOT SPECIFIED ----------				0.5

NOTES:
a. The electrode shall be analyzed for the specific oxides for which values are shown in this table. If the presence of other elements or oxides is indicated in the course of this work, the amount of those elements or oxides shall be determined to ensure that their total does not exceed the limit specified for "Other Oxides or Elements, Total" in the last column of the table.
b. SAE/ASTM Unified Numbering System for Metals and Alloys.
c. Tungsten content shall be determined by subtracting the total of all specified oxides and other oxides and elements from 100%.
d. Classification EWG must contain some oxide or element additive and the manufacturer must identify the type and nominal content of the oxide or element additive.
e. See Table A2 for closely matching grades in ISO 6848.

4. Acceptance

Acceptance[4] of the electrodes shall be in accordance with the provisions of ANSI/AWS A5.01, *Filler Metal Procurement Guidelines.*

5. Certification

By affixing the AWS specification and classification designations to the packaging, or the classification identification to the product, the manufacturer certifies that the product meets the requirements of this specification.[5]

6. Units of Measure and Rounding-Off Procedure

6.1 This specification makes use of both U.S. Customary Units and the International System of Units (SI). The measurements are not exact equivalents; therefore each system must be used independently of the other without combining in any way. The specification with the designation A5.12 uses U.S. Customary Units. The specification A5.12M uses SI Units. The latter are shown in appropriate columns in tables or within brackets [ ] when used in the text.

6.2 For the purpose of determining conformance with this specification, an observed or calculated value shall be rounded "to the nearest unit" in the last right-hand place of figures used in expressing the limiting value in accordance with the rounding-off method given in ASTM E29, *Standard Practice for Using Significant Digits in Test Data to Determine Conformance With Specifications.*

PART B — TEST, PROCEDURES, AND REQUIREMENTS

7. Summary of Test

Chemical analysis of the electrode is the only test required for classification of a product under this specification. Electrodes must also meet the dimensional, surface finish, and identification requirements established in this specification.

8. Retest

If the results of any test fail to meet the requirement, that test shall be repeated twice. The results of both retests shall meet the requirement. Sample for retest

[4] See Section A3, Acceptance (in the Annex) for further information concerning acceptance, testing of material shipped, and ANSI/AWS A5.01, *Filler Metal Procurement Guidelines.*

[5] See Section A4, Certification (in the Annex) for further information concerning certification and the testing called for to meet this requirement.

may be taken from the original test sample or a new sample. For chemical analysis, retest need be only for those specific elements that failed to meet the test requirement.

In the event that, during preparation or after completion of any test, it is clearly determined that prescribed or proper procedures were not followed in preparing the test sample, the test shall be considered invalid, without regard to whether the test was actually completed, or whether test results met, or failed to meet, the requirement. That test shall be repeated, following the prescribed procedures. In this case, the requirement for doubling the number of test specimens does not apply.

9. Chemical Analysis

9.1 A sample of the electrode shall be prepared for chemical analysis.

9.2 The sample shall be analyzed by accepted analytical methods. The referee method shall be ASTM F288, *Specification for Tungsten Wire for Electron Devices and Lamps.*

9.3 The results of the analysis shall meet the requirements of Table 1 for the classification of the electrode under test.

9.4 The alloy additions shall be uniformly distributed throughout the electrodes so that the operation of the electrodes is not adversely affected.

PART C — MANUFACTURE, IDENTIFICATION, AND PACKAGING

10. Method of Manufacture

The electrodes classified according to this specification may be manufactured by any method that will produce electrodes that meet the requirements of this specification.

11. Standard Sizes

Standard diameters and lengths are shown in Table 2. Sizes and tolerances other than those listed may be supplied as agreed between supplier and user.

12. Finish and Uniformity

12.1 Electrodes shall be free of surface impurities, undesirable films, foreign inclusions, pipes, slivers, scale, etc., that would adversely affect the operation of the welding equipment or the properties of weld metal made using the electrodes.

12.2 Electrodes shall be available as either clean finish or ground finish. The ground finish designates that the electrode has been cleaned of impurities after it has been centerless ground to a uniform size. It shall be supplied with a bright, polished surface.

12.3 For electrodes with a ground finish, the maximum surface roughness shall be 32 μin. AARH[0.8 μRa].

12.4 The electrodes shall be straight such that any element of its surface, over a specified length, must lie between two parallel lines of a specified spacing where the two lines and the nominal axis of the electrode share a common plane, as shown in Fig. 1. The specified spacing is 0.020 in. [0.5 mm] over a length of 4 in. [100 mm].

13. Standard Package Form

The standard package form is straight length. Standard package and package quantity shall be as agreed between the purchaser and supplier.

14. Electrode Identification

14.1 Electrodes shall be color coded in accordance with the requirements of Table 3.

14.2 The color coding may be accomplished by any method that meets the requirements of this specification. Such color coding shall have no adverse effect on the operation or use of the electrode.

15. Packaging

Electrodes shall be suitably packaged to ensure against damage during shipment and storage under normal conditions.

16. Marking of Packages

16.1 The following product information, as a minimum, shall be legibly marked so as to be visible from the outside of each unit package:

(a) Specification and classification designation (year of issue may be excluded). (For EWG classification, the type and nominal content of the oxide addition shall also be marked on the package)

(b) Supplier's name and trade designation

(c) Size and net quantity

TABLE 2
STANDARD SIZES AND LENGTHS

Size				Length			
Diameter in.	Tolerance[a] ± in.	Diameter mm	Tolerance[a] ± mm	Length in.	Tolerance[a] ± in.	Length mm	Tolerance[a] mm
0.010	0.001					50[b]	±1.5
		0.300	0.025	3	1/16	75[b]	−1.0, +2.5
0.020	0.002	0.50[b]	0.05	6	1/16	150[b]	−1.0, +4.0
0.040	0.002	1.00[b]	0.05	7	1/8	175[b]	−1.0, +6.0
0.060[c]	0.002			12	1/8	305	±3.0
		1.60[b]	0.05	18	1/8	455	±3.0
		2.00[b]	0.05	24	1/8	610	±3.0
0.093 (3/32)	0.003	2.40	0.08				
		2.50[b]	0.08				
		3.00	0.10				
0.125 (1/8)	0.003	3.20[b]	0.10				
0.156 (5/32)	0.003	4.00[b]	0.10				
0.187 (3/16)	0.003	4.80	0.10				
		5.00[b]	0.10				
0.250 (1/4)	0.003	6.40	0.10				
		8.00[b]	0.10				

NOTES:
a. Tolerances, other than those listed, may be supplied as agreed upon between supplier and user.
b. Standard sizes and lengths in ISO 6848, though tolerances differ in some cases.
c. Although the metric size 1.6 mm (0.063 in.) is closer to 1/16 in. (0.0625 in.), it has been common industry practice to refer to the U.S. customary size 0.060 in. as 1/16 in.

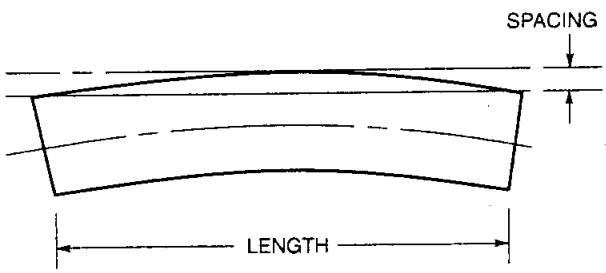

FIG. 1 MEASUREMENT PROCEDURE FOR STRAIGHTNESS

TABLE 3
ELECTRODE IDENTIFICATION REQUIREMENTS[a,b]

AWS Classification	Color
EWP	Green[c]
EWCe-2	Orange
EWLa-1	Black[c]
EWLa-1.5	Gold
EWLa-2	Blue
EWTh-1	Yellow[c]
EWTh-2	Red[c]
EWZr-1	Brown[c]
EWG	Gray

NOTES:
a. The actual color may be applied in the form of bands, dots, etc., at any point on the surface of the electrode.
b. The method of color coding used shall not change the diameter of the electrode beyond the tolerances permitted.
c. Color code agrees with ISO 6848.

(d) Lot, control, or heat number

16.2 Marking of any, or all, overpacking of unit packages with items listed in 16.1 shall be optional with the manufacturer.

16.3 The following precautionary information (as a minimum) shall be prominently displayed in legible print on all packages of the electrodes, including individual unit packages enclosed within a larger package:

WARNING:

Protect yourself and others. Read and understand this information.

FUMES AND GASES can be dangerous to your health.

ARC RAYS can injure eyes and burn skin.

ELECTRIC SHOCK can KILL.

- Before use, read and understand the manufacturer's instructions, Material Safety Data Sheets (MSDSs), and your employer's safety practices.
- Keep your head out of the fumes.
- Use enough ventilation, exhaust at the arc, or both, to keep fumes and gases away from your breathing zone and the general area.
- Wear correct eye, ear, and body protection.
- Do not touch live electrical parts.
- See American National Standard ANSI/ASC Z49.1, *Safety in Welding, Cutting, and Allied Processes,* published by the American Welding Society, 550 N.W. LeJeune Road, Miami, FL 33126; and *OSHA Safety and Health Standards*, 29 CFR 1910, available from the U.S. Government Printing Office, Washington, DC 20402.

DO NOT REMOVE THIS INFORMATION

Annex
Guide to AWS Specification for Tungsten and Tungsten-Alloy Electrodes for Arc Welding and Cutting

(This Annex is not a part of ANSI/AWS A5.12/A5.12M-98, *Specification for Tungsten and Tungsten-Alloy Electrodes for Arc Welding and Cutting,* but is included for information purposes only.)

A1. Introduction

A1.1 The purpose of this guide is to correlate the electrode classifications with their intended applications so the specification can be used effectively.

A1.2 Tungsten electrodes are nonconsumable in that they do not intentionally become part of the weld metal as do electrodes used as filler metals. The function of a tungsten electrode is to serve as one of the terminals of an arc which supplies the heat required for welding or cutting.

A2. Classification

A2.1 The system for identifying the electrode classifications in this specification follows the standard pattern used in other AWS filler metal specifications. The letter "E" at the beginning of the classification designation stands for electrode. The "W" indicates that the electrode is primarily tungsten. The "P" indicates that the electrode is essentially pure tungsten and contains no intentionally added alloying elements. The "Ce," "La," "Th," and "Zr" indicate that the electrode is alloyed with oxides of cerium, lanthanum, thorium, or zirconium, respectively. The numeral at the end of some of the classifications indicates a different chemical composition level or product within a specific group.

A2.2 "G" Classification

A2.2.1 This specification includes electrodes classified as EWG. The "G" indicates that the electrode is of a general classification. It is "general" because not all of the particular requirements specified for each of the other classifications are specified for this classification. The intent, in establishing this classification, is to provide a means by which electrodes that differ in one respect or another (chemical composition, for example) from other classifications (meaning that the composition of the electrode — in the case of this example — does not meet the composition specified for any of the classifications in the specification) can still be classified according to the specification. The purpose is to allow a useful electrode — one that otherwise would have to await a revision of the specification — to be classified immediately, under the existing specification. This means, then, that two electrodes — each bearing the same "G" classification — may be quite different in some certain respect. To prevent the confusion that this situation could create, this specification requires the manufacturer to identify, in the label, the type and nominal content of the alloy addition made in the particular product.

A2.2.2 Request for Electrode Classification

(1) When an electrode cannot be classified according to some classification other than a "G" classification, the manufacturer may request that a classification be established for that electrode. The manufacturer may do this by following the procedure given here. When the manufacturer elects to use the "G" classification, the Committee on Filler Metals recommends that the manufacturer still request that a classification be established for that electrode, as long as the electrode is of commercial significance.

(2) A request to establish a new electrode classification must be a written request and it needs to provide sufficient detail to permit the Committee on Filler Metals or the Subcommittee to determine whether the new classification is more appropriate, and whether either is necessary to satisfy the need. The request needs to state the variables and their limits, for such

a classification or modification. The request should contain some indication of the time by which completion of the new classification or modification is needed.

(3) The request should be sent to the Secretary of the Committee on Filler Metals at AWS Headquarters. Upon receipt of the request, the Secretary will:

(a) Assign an identifying number to the request. This number will include the date the request was received.

(b) Confirm receipt of the request and give the identification number to the person who made the request.

(c) Send a copy of the request to the Chairman of the Committee on Filler Metals and the Chairman of the particular Subcommittee involved.

(d) File the original request.

(e) Add the request to the log of outstanding requests.

(4) All necessary action on each request will be completed as soon as possible. If more than 12 months lapse, the Secretary shall inform the requestor of the status of the request, with copies to the Chairpersons of the Committee and of the Subcommittee. Requests still outstanding after 18 months shall be considered not to have been answered in a "timely manner" and the Secretary shall report these to the Chair of the Committee on Filler Metals for action.

(5) The Secretary shall include a copy of the log of all requests pending and those completed during the preceding year with the agenda for each meeting of the Committee on Filler Metals. Any other publication of requests that have been completed will be at the option of the American Welding Society, as deemed appropriate.

A3. Acceptance

Acceptance of all welding materials classified under this specification is in accordance with ANSI/AWS A5.01, *Filler Metal Procurement Guidelines,* as the specification states. Any testing a purchaser requires of the supplier, for material shipped in accordance with this specification, shall be clearly stated in the purchase order, according to the provisions of ANSI/AWS A5.01. In the absence of any such statement in the purchase order, the supplier may ship the material with whatever testing is normally conducted on the material of that classification, as specified in Schedule F, Table 1, of ANSI/AWS A5.01. Testing in accordance with any other Schedule in that Table must be specifically required by the purchase order. In such cases, acceptance of the material shipped will be in accordance with those requirements.

A4. Certification

The act of placing the AWS specification and classification designations on the packaging enclosing the product, or the classification identification on the product itself, constitutes the supplier's (manufacturer's) certification that the product meets all of the requirements of the specification.

The only testing requirement implicit in this certification is that the manufacturer has actually conducted the test required by the specification on material that is representative of that being shipped, and that that material met the requirements of the specification. Representative material, in this case, is any production run of that classification using the same formulation.

"Certification" is not to be construed to mean that tests of any kind were necessarily conducted on samples of the specific material shipped. Tests on such material may or may not have been conducted. The basis for the "certification" required by the specification is the classification test of "representative material" cited above, and the "Manufacturer's Quality Assurance Program" in ANSI/AWS A5.01.

Electrodes sold as a standard size must also meet the dimensional, surface finish, and identification requirements established in this specification.

A5. Ventilation During Welding

A5.1 Five major factors govern the quantity of fumes in the atmosphere to which welders and welding operators are exposed during welding:

(1) Dimensions of the space in which welding is done (with special regard to the height of the ceiling)

(2) Number of welders and welding operators working in that space

(3) Rate of evolution of fumes, gases, or dust, according to the materials and processes involved

(4) The proximity of the welders or welding operators to the fumes, as the fumes issue from the welding zone, and to the gases and dusts in the space in which they are working

(5) The ventilation provided to the space in which the welding is done.

A5.2 American National Standard ANSI/ASC Z49.1, *Safety in Welding, Cutting, and Allied Processes* (published by the American Welding Society), discusses the ventilation that is required during welding and should be referred to for details. Attention is drawn

TABLE A1
TYPICAL CURRENT RANGES FOR TUNGSTEN ELECTRODES[a]

Electrode Diameter		Amperes					
		DCEN (DCSP)	DCEP (DCRP)	Alternating Current Unbalanced Wave		Alternating Current Balanced Wave	
in.	mm	EWX-X	EWX-X	EWP	EWX-X	EWP	EWX-X
0.010	0.30	Up to 15	na[b]	Up to 15	Up to 15	Up to 15	Up to 15
0.020	0.50	5-20	na	10–20	5–20	5–15	5–20
0.040	1.00	15–80	na	20–60	15–80	10–30	20–60
0.060	1.60	70–150	10–20	50–100	70–150	30–80	60–120
0.093	2.40	150–250	15–30	100–160	140–235	60–130	100–180
0.125	3.20	250–400	25–40	150–200	225–325	100–180	160–250
0.156	4.00	400–500	40–55	200–275	300–400	160–240	200–320
0.187	4.80	500–750	55–80	250–350	400–500	190–300	290–390
0.250	6.40	750–1000	80–125	325–450	500–630	250–400	340–525

NOTES:
a. All are values based on the use of argon gas. Other current values may be employed depending on the shielding gas, type of equipment and application.
b. na = not applicable

particularly to the section of that document on Health Protection and Ventilation.

A6. Operation Characteristics

A6.1 The choice of an electrode classification, size, and welding current is influenced by the type and thickness of the base metals being welded. The capacity of tungsten electrodes to carry current is dependent upon numerous factors in addition to the classification and size, including type and polarity of the current, the shielding gas used, the type of equipment (air or water cooled), the extension of the electrode beyond the collet (sleeve or tube that holds the electrode), and the welding position. An electrode of a given size will have its greatest current-carrying capacity with direct current, electrode negative (straight polarity), less with alternating current, and still less with direct current, electrode positive (reverse polarity). Table A1 lists some typical current values that may be used with argon shielding gas. However, the other factors mentioned above should be carefully considered before selecting an electrode for a specific application.

A6.2 Tungsten has an electrical conductivity that is about 30% that of copper and a thermal conductivity which is 44% that of copper. Therefore, there will be more heating as current is passed through the tungsten electrode. When welding with tungsten electrodes, the arc tip should be the only hot part of the electrode; the remainder should be kept as cool as possible.

A6.3 One method of preventing electrode overheating is to keep the extension of the electrode from the collet short. If the extension is too long, even a relatively low current can cause the electrode to overheat and melt above the terminus of the arc. Conversely, if the current density is too low, the arc will be erratic and unstable.

A6.4 Many electrode classifications contain emissive oxide additions. These additions lower the temperature at which the electrode emits electrons, to a temperature below the melting point of tungsten. Such an electrode operates cooler, or it can operate at higher currents as will be noted from Table A1. Benefits of these additions include easier starting, particularly when using superimposed high frequency, more stable operation, and reduced contamination. These benefits are noted in the description listed for the various classifications containing oxide additives.

A6.5 All tungsten electrodes may be used in a similar manner. However, electrodes of each classification have distinct advantages with respect to other classifications. The following section discusses the specific electrode classifications with regard to their operating characteristics and usability.

A7. Description and Intended Use of Electrodes

A7.1 EWP Electrode Classification (Green). The EWP electrodes are unalloyed tungsten electrodes (99.5

percent tungsten minimum). Their current-carrying capacity is lower than that of other electrodes. They provide good stability when used with alternating current, either balanced wave or continuously high frequency stabilized. They may be used with direct current and also with either argon or helium, or a combination of both, as a shielding gas. They maintain a clean, balled end, which is preferred for aluminum and magnesium welding. These electrodes have reasonably good resistance to contamination of the weld metal by the electrode, although the oxide containing electrodes are superior in this respect. EWP electrodes are generally used on less critical applications, except for welding aluminum and magnesium. The lower cost EWP electrodes can be used for less critical applications where some tungsten contamination of welds is acceptable.

A7.2 EWCe-2 Electrode Classification (Orange). The EWCe-2 electrodes are tungsten electrodes containing about 2% cerium oxide, referred to as ceria. The EWCe-2 electrodes were first introduced into the United States market in 1987. Several other grades of this type electrode are commercially practical, including electrodes containing 1% CeO, but only one grade, EWCe-2, has been incorporated in this specification as having commercial significance.

The advantages of tungsten electrodes containing ceria, compared to pure tungsten, include increased ease of starting, improved arc stability and reduced rate of vaporization or burn-off. Unlike thoria, ceria is not a radioactive material. These advantages increase with increased ceria content. These electrodes operate successfully with alternating current or direct current, either polarity.

A7.3 EWLa-X Electrode Classifications. The EWLa-X electrodes are tungsten electrodes containing lanthanum oxide, referred to as lanthana. The advantages and operating characteristics of these electrodes are similar to that of the EWCe-2 electrodes. Unlike thoria, lanthana is not a radioactive material.

A7.3.1 EWLa-1 Electrode Classification (Black). The EWLa-1 electrodes are tungsten electrodes which contain nominally 0.8–1.2 weight-percent (wt.-%) lanthanum oxide, referred to as lanthana. The advantages and operating characteristics of this electrode type are very similar to those of EWCe-2 electrodes.

A7.3.2 EWLa-1.5 Electrode Classification (Gold). EWLa-1.5 designates a tungsten electrode containing 1.3–1.7 wt.-% of dispersed lanthanum oxide (La_2O_3) for enhanced arc starting and stability, reduced tip erosion rate, and extended operating current range. These electrodes can be used as nonradioactive substitutes for 2% thoriated tungsten as the operating characteristics are very similar. Lanthanated tungsten can be used for both dcen and ac applications.

A7.3.3 EWLa-2 Electrode Classification (Blue). EWLa-2 designated a tungsten electrode containing 1.8–2.2 wt.-% of dispersed lanthanum oxide (La_2O_3). The EWLa-2 electrode has the highest volume of oxides of any of the specific single-additive AWS-specified electrodes types, which serves to enhance arc starting and stability, reduce tip erosion rate, and extend operating current range. Lanthanated tungsten electrodes can be used for both dcen and ac applications.

A7.4 EWTh-X Electrode Classifications. The EWTh-X electrodes are tungsten electrodes containing thorium oxide, referred to as thoria. The thoria in all classes is responsible for increasing the usable life of these electrodes over the EWP electrodes because of their higher electron emission, better arc starting and arc stability. They generally have longer life and provide greater resistance to tungsten contamination of the weld.

SAFETY NOTE

Thoria is a low-level radioactive material. However, if welding is to be performed in confined spaces for prolonged periods of time or if electrode grinding dust might be ingested, special precautions relative to ventilation should be considered. The user should consult appropriate safety personnel.

The following statement was developed by the International Institute of Welding (IIW) Commission VIII on Health and Safety:

STATEMENT OF COMMISSION VIII ON HEALTH ASPECTS IN THE USE OF THORIATED TUNGSTEN ELECTRODES

"Thorium oxides are found in Thoriated Tungsten Electrodes up to 4.2% (ISO 6848-WT 40 Electrode). Thorium is radioactive and may present hazards by external and internal exposure. If alternatives are technically feasible, they should be used.

"Several studies carried out on Thoriated Electrodes have shown that due to the type of radiation generated, external radiation risks — during storage, welding, or disposal of residues — are negligible under normal conditions of use.

"On the contrary, during the grinding of electrode tips there is generation of radioactive dust, with the risk of internal exposure. Consequently, it is necessary to use local exhaust ventilation to control the dust at the source, complemented if necessary by respiratory protective equipment. The risk of internal exposure

during welding is considered negligible since the electrode is consumed at a very slow rate.

"Precautions must be taken in order to control any risks of exposure during the disposal of dust from grinding devices.

"The above statement is based on a considered view of the available reports. Commission VIII will continue to keep these aspects under review."

A7.4.1 EWTh-1 Electrode Classification (Yellow). These electrodes were designed for direct current applications. They have the thoria content dispersed evenly throughout their entire length. They maintain a sharpened point well, which is desirable for welding steel. They can be used on alternating current work, but a satisfactory balled end, which is desirable for the welding of nonferrous materials, is difficult to maintain.

A7.4.2 EWTh-2 Electrode Classification (Red). The higher thoria content in the EWTh-2 electrode causes the operating characteristic improvements to be more pronounced than in the lower thoria content EWTh-1.

A7.4.3 Should it be desired to use these electrodes for alternating current welding, then balling can be accomplished by briefly, and carefully, welding with direct current electrode positive prior to welding with alternating current. During alternating current welding, the balled end does not melt and so emission is not as good as from a liquid ball on an EWP electrode.

A7.5 EWZr-1 Electrode Classification (Brown). The EWZr-1 electrode is a tungsten electrode containing zirconium oxide, referred to as zirconia. This electrode is preferred for applications where tungsten contamination of the weld must be minimized. This electrode performs well when used with alternating current as it retains a balled end during welding and has a high resistance to contamination.

A7.6 EWG Electrode Classification (Gray). The EWG electrode is a tungsten electrode containing an unspecified alloy addition. The purpose of the addition is to affect the nature or characteristics of the arc, as defined by the manufacturer. Although no alloy addition is specified, the manufacturer must identify any specific additions and the nominal quantities added.

A8. General Recommendations

These recommendations, when followed, should maintain high weld quality and promote welding economy in any specific application.

A8.1 The appropriate current (type and magnitude) should be selected for the electrode size to be used. Too great a current will cause excessive melting, dripping, or volatilization of the electrode. A welding current which is too low to properly heat the electrode tip may cause instability of the welding arc or inability to maintain a welding arc.

A8.2 The electrode should be properly cut and ground tapered by following the supplier's suggested procedures. Breaking for severing an electrode is not recommended since it may cause a jagged end or a bent electrode, which usually results in a poorly shaped arc and excessive electrode heating.

A8.3 The electrodes should be handled carefully and kept as clean as possible. To obtain maximum cleanliness, they should be stored in their original package until used.

A8.4 The shielding gas flow should be maintained until the electrode has cooled. When the electrodes are properly cooled, the arc end will appear bright and polished. When improperly cooled, the end may oxidize and appear to have a colored film which can, unless removed, adversely affect the weld quality on subsequent welds. All connections, both gas and water, should be checked for tightness. Oxidized, discolored, or otherwise contaminated electrodes will cause difficult arc starting and may prevent starting depending upon conditions and the arc starting method used.

A8.5 The electrode extension within the gas shielding pattern should be kept to a minimum, generally dictated by the application and equipment. This is to ensure protection of the electrode by the gas even at low gas flow rates.

A8.6 The equipment and, in particular, the shielding gas nozzle should be kept clean and free of weld spatter. A dirty nozzle adversely influences the gas shielding. This contributes to improper gas flow patterns and arc wandering, which can result in poor weld quality. It may also contribute to excessive electrode consumption.

A9. Discontinued Classifications

The EWTh-3 classification was discontinued in the ANSI/AWS A5.12-92 revision of this specification, as having no commercial significance. For information about this classification, the user is referred to the ANSI/AWS A5.12-80 revision.

TABLE A2
COMPARABLE CLASSIFICATIONS IN ISO 6848 STANDARD

AWS Classification		ISO Codification	
EWP	(green)	WP	(green)
EWCe-2	(orange)	WC 20	(gray)
EWLa-1	(black)	WL 10	(black)
EWLa-1.5	(gold)		
EWLa-2	(blue)		
EWTh-1	(yellow)	WT 10	(yellow)
EWTh-2	(red)	WT 20	(red)
EWZr-1	(brown)	WZ 3	(brown)
EWG	(gray)		

A10. International Classifications

The international standard, ISO 6848, classifies many of the grades in this specification. The compositions are virtually the same, though the limits differ slightly in some cases. The classification designations of the corresponding grades are shown in Table A2. Table 2 indicates the standard metric sizes and lengths which correspond to sizes which appear in the ISO standard. Table 3 indicates the classifications which bear the same color marking.

A11. General Safety Considerations

A11.1 Burn Protection. Molten metal, sparks, slag, and hot work surfaces are produced by welding, cutting, and allied processes. These can cause burns if precautionary measures are not used. Workers should wear protective clothing made of fire-resistant material. Pant cuffs, open pockets, or other places on clothing that can catch and retain molten metal or sparks should not be worn. High-top shoes or leather leggings and fire-resistant gloves should be worn. Pant legs should be worn over the outside of high-top shoes. Helmets or hand shields that provide protection for the face, neck, and ears, and a head covering to protect the head should be used. In addition, appropriate eye protection should be used.

When welding overhead or in confined spaces, ear plugs to prevent weld spatter from entering the ear canal should be worn in combination with goggles or equivalent to give added eye protection. Clothing should be kept free of grease and oil. Combustible materials should not be carried in pockets. If any combustible substance has been spilled on clothing, a change to clean, fire-resistant clothing should be made before working with open arcs or flame. Aprons, cape-sleeves, leggings, and shoulder covers with bibs designed for welding service should be used. Where welding or cutting of unusually thick base metal is involved, sheet metal shields should be used for extra protection. Mechanization of highly hazardous processes or jobs should be considered. Other personnel in the work area should be protected by the use of noncombustible screens or by the use of appropriate protection as described in the previous paragraph.

Before leaving a work area, hot workpieces should be marked to alert other persons of this hazard. No attempt should be made to repair or disconnect electrical equipment when it is under load.

Disconnection under load produces arcing of the contacts and may cause burns or shock, or both. (*Note: Burns can be caused by touching hot equipment such as electrode holders, tips, and nozzles. Therefore, insulated gloves should be worn when these items are handled, unless an adequate cooling period has been allowed before touching.*)

The following sources are for more detailed information on personal protection:

(a) ANSI/ASC Z41.1, *Safety-Toe Footwear,* American National Standards Institute, 11 West 42nd Street, 13th Floor, New York, NY 10036.

(b) ANSI/ASC Z49.1, *Safety in Welding, Cutting, and Allied Processes.* American Welding Society, 550 N.W. LeJeune Road, Miami, FL 33126.

(c) ANSI/ASC Z87.1, *Practice for Occupational and Educational Eye and Face Protection,* American National Standard Institute, 11 West 42nd Street, 13th Floor, New York, NY 10036.

(d) Code of Federal Regulations, Title 29, Labor, Chapter XVII, Part 1910, OSHA General Industry Standards. Available from the U.S. Government Printing Office, Washington, DC 20402.

A11.2 Electrical Hazards. Electric shock can kill. However, it can be avoided. Live electrical parts should not be touched. The manufacturer's instructions and recommended safety practices should be read and understood. Faulty installation, improper grounding, and incorrect operation and maintenance of electrical equipment are all sources of danger.

All electrical equipment and the workpieces should be grounded. The workpiece lead is not a ground lead. It is used only to complete the welding circuit. A separate connection is required to ground the workpiece.

The corrrect cable size should be used, since sustained overloading will cause cable failure and result in possible electrical shock or fire hazard. All electrical connections should be tight, clean, and dry. Poor connections can overheat and even melt. Further, they can produce dangerous arcs and sparks. Water, grease, or dirt should

not be allowed to accumulate on plugs, sockets, or electrical units. Moisture can conduct electricity.

To prevent shock, the work area, equipment, and clothing should be kept dry at all times. Welders should wear dry gloves and rubber-soled shoes, or stand on a dry board or insulted platform. Cables and connections should be kept in good condition. Improper or worn electrical connections may create conditions that could cause electrical shock or short circuits. Worn, damaged, or bare cables should not be used. Open-circuit voltage should be avoided. When several welders are working with arcs of different polarities, or when a number of alternating current machines are being used, the open-circuit voltages can be additive. The added voltages increase the severity of the shock hazard.

In case of electric shock, the power should be turned **OFF**. If the rescuer must resort to pulling the victim from the live contact, nonconducting materials should be used. If the victim is not breathing, cardiopulmonary resuscitation (CPR) should be administered as soon as contact with the electrical source is broken. A physician should be called and CPR continued until breathing has been restored, or until a physician has arrived. Electrical burns are treated as thermal burns; that is, clean, cold (iced) compresses should be applied. Contamination should be avoided; the area should be covered with a clean, dry dressing; and the patient should be transported to medical assistance.

Recognized safety standards such as ANSI/ASC Z49.1, *Safety in Welding, Cutting, and Allied Processes,* and NFPA No. 70, *National Electrical Code*, available from the National Fire Protection Association, 1 Batterymarch Park, Quincy, MA 02269, should be followed.

A11.3 Fumes and Gases. Many welding, cutting, and allied processes produce fumes and gases which may be harmful to health. Fumes are solid particles which originate from welding filler metals and fluxes, the base metal, and any coatings present on the base metal. Gases are produced during the welding process or may be produced by the effects of process radiation on the surrounding environment. Management, welders, and other personnel alike should be aware of the effects of these fumes and gases. The amount and composition of these fumes and gases depend upon the composition of the filler metal and base metal, welding process, current level, arc length, and other factors.

The possible effects of overexposure range from irritation of eyes, skin, and respiratory system to more severe complications. Effects may occur immediately or at some later time. Fumes can cause symptoms such as nausea, headaches, dizziness, and metal fume fever. The possibility of more serious health effects exists when especially toxic materials are involved. In confined spaces, the shielding gases and fumes might displace breathing air and cause asphyxiation. One's head should always be kept out of the fumes. Sufficient ventilation, exhaust at the arc, or both, should be used to keep fumes and gases from one's breathing zone and the general area.

In some cases, natural air movement will provide enough ventilation. Where ventilation may be questionable, air sampling should be used to determine if corrective measures should be applied.

More detailed information on fumes and gases produced by the various welding processes may be found in the following:

(a) The permissible exposure limits required by OSHA can be found in *Code of Federal Regulations*, Title 29, Chapter XVII, Part 1910. The OSHA General Industry Standards are available from the Superintendent of Documents, U.S. Government Printing Office, Washington, DC 20402.

(b) The recommended threshold limit values for these fumes and gases may be found in *Threshold Limit Values for Chemical Substances and Physical Agents in the Workroom Environment*, published by the American Conference of Governmental Industry Hygienists (ACGIH), Kemper Woods Center, 1330 Kemper Meadow Drive, Cincinnati, OH 45240.

(c) The results of an AWS-funded study are available in a report entitled, *Fumes and Gases in the Welding Environment*, available from the American Welding Society.

A11.4 Radiation. Welding, cutting, and allied operations may produce radiant energy (radiation) harmful to health. One should become acquainted with the effects of this radiant energy.

Radiant energy may be ionizing (such as x-rays), or nonionizing (such as ultraviolet, visible light, or infrared). Radiation can produce a variety of effects such as skin burns and eye damage, depending on the radiant energy's wavelength and intensity, if excessive exposure occurs.

A11.4.1 Ionizing Radiation. Ionizing radiation is produced by the electron beam welding process. It is ordinarily controlled within acceptance limits by use of suitable shielding enclosing the welding area.

A11.4.2 Nonionizing Radiation. The intensity and wavelengths of nonionizing radiant energy produced depend on many factors, such as the process, welding parameters, electrode and base-metal composition, fluxes, and any coating or plating on the base metal. Some processes, such as resistance welding, and cold

pressure welding ordinarily produce negligible quantities of radiant energy. However, most arc welding and cutting processes (except submerged arc when used properly), laser beam welding and torch welding, cutting, brazing, or soldering can produce quantities of nonionizing radiation such that precautionary measures are necessary. Protection from possible harmful effects caused by nonionizing radiant energy from welding include the following measures:

(a) One should not look at welding arcs except through filter plates which meet the requirements of ANSI/ASC Z87.1, *Practice for Occupational and Educational Eye and Face Protection*, published by the American National Standards Institute. Transparent welding curtains are not intended as welding filter plates, but rather are intended to protect passersby from incidental exposure.

(b) Exposed skin should be protected with adequate gloves and clothing as specified in ANSI/ASC Z49.1, *Safety in Welding, Cutting, and Allied Processes*, published by the American Welding Society.

(c) Reflections from welding arcs should be avoided, and all personnel should be protected from intense reflections. (*Note: Paints using pigments of substantially zinc oxide or titanium dioxide have a lower reflectance for ultraviolet radiation.*)

(d) Screens, curtains, or adequate distance from aisles, walkways, etc., should be used to avoid exposing passersby to welding operations.

(e) Safety glasses with UV-protective side shields provide some beneficial protection from ultraviolet radiation produced by welding arcs.

A11.4.3 Ionizing radiation information sources include the following:

(a) ANSI/AWS F2.1-78, *Recommended Safe Practices for Electron Beam Welding and Cutting*, available from the American Welding Society.

(b) Manufacturer's product information literature.

A11.4.4 The following include nonionizing radiation information sources:

(a) American National Standards Institute. ANSI/ASC Z136.1, Safe Use of Lasers, New York, NY: American National Standards Institute.

(b) ————. ANSI/ASC Z87.1, *Practice for Occupational and Educational Eye and Face Protection.* New York, NY: American National Standards Institute.

(c) ————. ANSI/ASC Z49.1, *Safety in Welding, Cutting, and Allied Processes*: American Welding Society.

(d) Hinrichs, J. F. "Project Committee on Radiation—Summary Report." *Welding Journal*, January 1978.

(e) Moss, C. E. "Optical Radiation Transmission Levels through Transparent Welding Curtains." *Welding Journal*, March 1979.

(f) Moss, C. E., and Murray, W. E. "Optical Radiation Levels Produced in Gas Welding, Torch Brazing, and Oxygen Cutting." *Welding Journal*, September 1979.

(g) Marshall, W. J., Sliney, D. H., *et al.* "Optical Radiation Levels Produced by Air-Carbon Arc Cutting Processes." *Welding Journal*, March 1980.

(h) National Technical Information Service. Nonionizing radiation protection special study No. 42-0053-77, *Evaluation of the Potential Hazards from Actinic Ultraviolet Radiation Generated by Electric Welding and Cutting Arcs*. Springfield, VA: National Technical Information Service. ADA-033768.

(i) National Technical Information Service. Nonionizing radiation protection special study No. 42-0312-77, *Evaluation of the Potential Retina Hazards from Optical Radiation Generated by Electrical Welding and Cutting Arcs*. Springfield, VA: National Technical Information Service. ADA-043023.

SPECIFICATION FOR SOLID SURFACING WELDING RODS AND ELECTRODES

SFA-5.13

(Identical with AWS Specification A5.13-80)

Scope

This specification prescribes requirements for solid bare surfacing welding rods for use with the oxyfuel and gas tungsten arc welding processes. This specification also covers solid bare surfacing electrodes for use with the gas metal arc process and solid covered surfacing electrodes for use with the shielded metal arc welding process.

Note: The values stated in U.S. customary units are to be regarded as the standard. The SI units are given as equivalent values to the U.S. customary units. The published sizes and dimensions in the two systems are not identical and, for this reason, conversion from a published size or dimension in one system will not always coincide with the published size or dimension in the other. Suitable conversions, encompassing published sizes of both, can be made, however, if appropriate tolerances are applied in each case.

Note: No attempt has been made to classify all filler metals within the limits of the above scope. This specification covers only those filler metals that have approximate industrial standardization and for which technical data are available. A list of other commonly used filler metals is given in Table A1 of the Appendix. It is intended that subsequent editions of this specification will incorporate these other filler metals as industrial standardization occurs.

1. Classification and Acceptance

1.1 Classification. Bare surfacing welding rods and electrodes are classified on the basis of their chemical composition as manufactured. Covered surfacing electrodes are classified on the basis of the chemical composition of their undiluted weld metal. Any welding rod or electrode classified under one classification shall not be classified under any other classification of this specification.

1.2 Acceptance. At the option and expense of the purchaser, any or all of the test requirements of this specification may be used as a basis for acceptance of the products covered by this specification. A5.01, Filler Metal Procurement Guidelines, may be referred to for lot definitions and frequency of testing.

1.3 Chemical Composition Requirements. The chemical composition of the bare welding rods and electrodes shall conform to the requirements prescribed for their classification in Table 1. The chemical composition of the undiluted weld metal for covered electrodes shall conform to the requirements prescribed for their classification in Table 2. The details of the test are specified in 3.4.

1.4 Usability. A test, as described in 3.3, is prescribed to demonstrate the usability of the filler metals. In order to be classified under this specification, the filler metals shall be capable of yielding the following usability test results:

1.4.1 For welding rods, the metal shall flow freely and smoothly over the surface of the plate without boiling or excessive activity.

1.4.2 Electrodes shall operate smoothly and without excessive spatter when used within the current ranges recommended by the manufacturer. Slag shall be readily removed with hand tools.

1.4.3 The surface of the test pad, after being ground, shall be free from defects visible to the naked eye.

1.5 Retests. If any test fails, two additional tests of that particular test, as taken from the original test assembly or from new test assemblies, shall be per-

TABLE 1
CHEMICAL REQUIREMENTS FOR BARE SURFACING WELDING RODS AND ELECTRODES

AWS Classification	Carbon, per cent	Manganese, per cent	Cobalt, per cent	Tungsten, per cent	Nickel per cent	Chromium, per cent	Molybdenum, per cent	Iron, per cent	Vanadium, per cent	Copper, per cent	Aluminum, per cent	Zinc, per cent	Silicon, per cent	Lead, per cent	Tin, per cent	Phosphorus, per cent	Total other elements, per cent
RFe5-A	0.7 to 1.0	0.50	—	5.0 to 7.0	—	3.0 to 5.0	4.0 to 6.0	remainder	1.0 to 2.5	—	—	—	0.50	—	—	—	1.0
RFe5-B	0.5 to 0.9	0.50	—	1.0 to 2.5	—	3.0 to 5.0	5.0 to 9.5	remainder	0.08 to 1.3	—	—	—	0.50	—	—	—	1.0
RFeCr-Al	3.7 to 5.0	2.0 to 6.0	—	—	—	27.0 to 35.0	—	remainder	—	—	—	—	1.10 to 2.5	—	—	—	1.0
RCoCr-A	0.9 to 1.4	1.00	remainder	3.0 to 6.0	3.0	26.0 to 32.0	1.0	3.0	—	—	—	—	2.0	—	—	—	0.50
RCoCr-B	1.2 to 1.7	1.00	remainder	7.0 to 9.5	3.0	26.0 to 32.0	1.0	3.0	—	—	—	—	2.0	—	—	—	0.50
RCoCr-C	2.0 to 3.0	1.00	remainder	11.0 to 14.0	3.0	26.0 to 33.0	1.0	3.0	—	—	—	—	2.0	—	—	—	0.50
RCuZn-E[b]	—	0.30	—	—	—	—	—	1.50	—	56.0 min	0.01[a]	remainder	0.04 to 0.25	0.05[a]	2.00 to 3.00	—	0.50
ERCuSi-A[b]	—	1.5[c]	—	—	[a]	—	—	0.5	—	94.0 min	0.01[a]	1.5[a]	2.8 to 4.0	0.02[a]	1.5[a]	[a]	0.50
ERCuAl-A2[b]	—	—	—	—	—	—	—	1.5	—	remainder	9.0 to 11.0	0.02	0.10	0.02[a]	—	—	0.50
ERCuAl-A3	—	—	—	—	—	—	—	3.0 to 5.0	—	remainder	10.0 to 11.0	0.10	0.10	0.02[a]	—	—	0.50
RCuAl-C	—	—	—	—	—	—	—	3.0 to 5.0	—	remainder	12.0 to 13.0	0.02	0.04	0.02	—	—	0.50
RCuAl-D	—	—	—	—	—	—	—	3.0 to 5.0	—	remainder	13.0 to 14.0	0.02	0.04	0.02	—	—	0.50
RCuAl-E	—	—	—	—	—	—	—	3.0 to 5.0	—	remainder	14.0 to 15.0	0.02	0.04	0.02	—	—	0.50
ERCuSn-A[b]	—	[a]	—	—	[a]	—	—	[a]	—	93.5 min	0.01[a]	[a]	[a]	0.02[a]	4.0 to 6.0	0.10 to 0.35	0.50
RCuSn-D	—	—	—	—	—	—	—	—	—	88.5 min	0.01[a]	—	—	0.05[a]	9.0 to 11.0	0.10 to 0.30	0.50
RNiCr-A	0.30 to 0.60	—	1.50	—	remainder	8.0 to 14.0	—	1.25 to 3.25	2.00 to 3.00 per cent boron			—	1.25 to 3.25	—	—	—	0.50
RNiCr-B	0.40 to 0.80	—	1.25	—	remainder	10.0 to 16.0	—	3.00 to 5.00	2.00 to 4.00 per cent boron			—	3.00 to 5.00	—	—	—	0.50
RNiCr-C	0.50 to 1.00	—	1.00	—	remainder	12.0 to 18.0	—	3.50 to 5.50	2.50 to 4.50 per cent boron			—	3.50 to 3.50	—	—	—	0.50

NOTE 1: Analysis shall be made for the elements for which specific values are shown in this table. If, however, the presence of other elements is indicated in the course of routine analysis, further analysis shall be made to determine that the total of these other elements is not present in excess of the limits specified for "total other elements" in the last column in the table.

NOTE 2: Single values shown are maximum percentages, except where otherwise specified.

a. Total other elements, including the element marked with footnote a, shall not exceed the value specified.

b. This AWS classification is intended to be identical with the same classification that appears in the latest edition of AWS A5.7, Specification for Copper and Copper Alloy Bare Welding Rods and Electrodes.

c. One or more of these elements may be present within the limits specified.

TABLE 2
CHEMICAL REQUIREMENTS[a] FOR COVERED SURFACING ELECTRODES

AWS Classification	Carbon, per cent	Manganese, per cent	Cobalt, per cent	Tungsten, per cent	Nickel per cent	Chromium, per cent	Molybdenum, per cent	Iron, per cent	Vanadium, per cent	Copper, per cent	Aluminum, per cent	Zinc, per cent	Silicon, per cent	Lead, per cent	Tin, per cent	Phosphorus, per cent	Total other elements, per cent
EFe5-A	0.7 to 1.0	0.60	—	5.0 to 7.0	—	3.0 to 5.0	4.0 to 6.0	remainder	1.0 to 2.5	—	—	—	0.80	—	—	—	1.0
EFe5-B	0.5 to 0.9	0.60	—	1.0 to 2.5	—	3.0 to 5.0	5.0 to 9.5	remainder	0.8 to 1.3	—	—	—	0.80	—	—	—	1.0
EFe5-C	0.3 to 0.5	0.60	—	1.0 to 2.5	—	3.0 to 5.0	5.0 to 9.0	remainder	0.8 to 1.2	—	—	—	0.80	—	—	—	1.0
EFeMn-A	0.5 to 0.9	11.0 to 16.0	—	—	2.75 to 6.0	0.50	—	remainder	—	—	—	—	1.3	—	—	0.03	1.0
EFeMn-B	0.5 to 0.9	11.0 to 16.0	—	—	—	0.50	0.6 to 1.4	remainder	—	—	—	—	0.3 to 1.3	—	—	0.03	1.0
EFeCr-Al	3.0 to 5.0	4.0 to 8.0	—	—	—	26.0 to 32.0	2.0	remainder	—	—	—	—	1.0 to 2.5	—	—	—	1.0
ECoCr-A	0.7 to 1.4	2.0	remainder	3.0 to 6.0	3.0	25.0 to 32.0	1.0	5.0	—	—	—	—	2.0	—	—	—	0.50
ECoCr-B	1.0 to 1.7	2.0	remainder	7.0 to 9.5	3.0	25.0 to 32.0	1.0	5.0	—	—	—	—	2.0	—	—	—	0.50
ECoCr-C	1.75 to 3.0	2.0	remainder	11.0 to 14.0	3.0	25.0 to 33.0	1.0	5.0	—	—	—	—	2.0	—	—	—	0.50
ECuSi[c]	—	1.5	—	—	[b]	—	—	0.50	—	remainder	0.01	—	2.4 to 4.0	0.02[b]	1.5	[b]	0.50
ECuAl-A2[c]	—	[b]	—	—	[b]	—	—	0.5 to 5.0	—	remainder	7.0 to 9.0	[b]	1.0	0.02[b]	[b]	—	0.60
ECuAl-B[c]	—	[b]	—	—	[b]	—	—	2.5 to 5.0	—	remainder	8.4 to 10.0	[b]	1.0	0.02[b]	[b]	—	0.60
ECuAl-C	—	—	—	—	—	—	—	3.0 to 5.0	—	remainder	12.0 to 13.0	0.02	0.04	0.02[b]	—	—	0.50
ECuAl-D	—	—	—	—	—	—	—	3.0 to 5.0	—	remainder	13.0 to 14.0	0.02	0.04	0.02	—	—	0.50
ECuAl-E	—	—	—	—	—	—	—	3.0 to 5.0	—	remainder	14.0 to 15.0	0.02	0.04	0.02	—	—	0.50
ECuSn-A[c]	—	[b]	—	—	[b]	—	—	0.25	—	remainder	0.01	[b]	[b]	0.02[b]	4.0 to 6.0	0.05 to 0.35	0.50
ECuSn-C[c]	—	[b]	—	—	[b]	—	—	0.25	—	remainder	0.01	[b]	[b]	0.02[b]	7.0 to 9.0	0.05 to 0.35	0.50
ENiCr-A	0.30 to 0.60	—	1.50	—	remainder	8.0 to 14.0	—	1.25 to 3.25	2.00 to 3.00 per cent boron				1.25 to 3.25	—	—	—	0.50
ENiCr-B	0.40 to 0.80	—	1.25	—	remainder	10.0 to 16.0	—	3.00 to 5.00	2.00 to 4.00 per cent boron				3.00 to 5.00	—	—	—	0.50
ENiCr-C	0.50 to 1.00	—	1.00	—	remainder	12.0 to 18.0	—	3.50 to 5.50	2.50 to 4.50 per cent boron				3.50 to 5.50	—	—	—	0.50

NOTE 1: Analysis shall be made for the elements for which specific values are shown in this table. If, however, the presence of other elements is indicated in the course of routine analysis, further analysis shall be made to determine that the total of these other elements is not present in excess of the limits specified for "total other elements" in the last column in the table.

NOTE 2: Single values shown are maximum percentages, except where otherwise specified.

a. The analysis given is for deposited weld metal.

b. Total other elements, incuding the elements marked with footnote b, shall not exceed the value specified.

c. This AWS classification is intended to be identical with the same classification that appears in the latest edition of AWS A5.7, Specification for Copper and Copper Alloy Covered Electrodes.

formed, and the results of both shall meet the requirements prescribed for that test.

2. Manufacture

2.1 Method of Manufacture. The electrodes and rods may be made by any method that will yield a product conforming to the requirements of this specification.

2.2 Welding Rods and Bare Electrodes — Finish and Uniformity. Welding rods and bare electrodes shall be of uniform quality and free from segregation, oxides, slivers, seams, or other irregularities that would adversely affect the welding properties or the operation of the welding equipment.

2.3 Covered Electrodes

2.3.1 The covering on covered electrodes of all sizes shall be concentric to the extent that the maximum core-plus-one-covering dimension shall not exceed the minimum core-plus-one-covering dimension by more than 7 percent of the minimum core-plus-one-covering dimension for wrought core wire electrodes, or by more than 10 percent for cast core wire electrodes, provided that in any case no "fingernailing"[1] shall occur during welding. The concentricity may be measured by any suitable means.

2.3.2 The covering shall be such that it is not readily damaged by ordinary handling.

2.3.3 The covering shall be such that heating of the electrode during welding shall not cause blistering or flaking of the covering within the ranges of current recommended by the manufacturer.

2.3.4 Core wire and coverings shall be free of defects that would interfere with uniform performance of the electrodes.

2.4 Exposed Core

2.4.1 The grip portion of covered electrodes for manual welding shall be free from covering for a distance no less than $\frac{3}{4}$ in. (20 mm) nor more than $1\frac{1}{4}$ in. (32 mm) for making contact with the holder. The arc end of each covered electrode shall be sufficiently bare and the covering sufficiently tapered to permit easy striking of the arc. The length of the bare portion of the arc end (measured from the end to the point where full cross section of the covering is obtained) shall not exceed $\frac{1}{8}$ in. (3.2 mm) or the diameter of the core wire, whichever is smaller.

2.5 Standard Sizes and Lengths. Standard sizes and lengths of welding rods are shown in Table 3, and standard sizes and lengths of electrodes are shown in Table 4.

2.6 Packaging. Welding rods and electrodes shall be suitably packaged to protect against damage during handling, shipping, or under normal dry storage conditions in bundles or containers of 5, 10, 25, 60 or 100 lbs (2.3, 4.5, 11, 23, 27, or 45 kg) net weight.[2]

2.7 Marking

2.7.1 The outside of each unit package shall be legibly marked with the following information:

2.7.1.1 Specification and classification number

2.7.1.2 Standard size and net weight

2.7.1.3 Lot, control, or heat number

2.7.2 Marking of any or all overpacking of unit packages with items listed in 2.7.1 shall be optional with the manufacturer.

2.7.3 Bare electrodes and rods wound on spools shall be identified by the specification and classification number, trade designation, and size and net weight, with the lot, heat, or control number placed on at least one flange of the spool in such a manner that this identification cannot be readily removed.

2.7.4 For other than oxyfuel rods, all packages of filler metal, or all individually packaged units enclosed within a larger package(s), shall carry the following precautionary labeling or its equivalent, as a minimum, prominently displayed in legible type:

[1] This term indicates that the electrode covering at the arc end is being consumed unevenly around the circumference of the core wire. Thus, instead of the covering remaining symmetrical with respect to the core wire, it protrudes beyond the core wire in much the same manner as a fingernail protrudes beyond the end of a finger.

[2] Other standard weights are available upon agreement between purchaser and supplier.

TABLE 3
STANDARD SIZES AND LENGTHS OF WELDING RODS

AWS Classification	Wrought				Cast			
	Diameter,		Length,		Diameter,		Length,	
	in.	mm[a]	in.	mm[b]	in.	mm[c]	in.	mm
RFe5b-A	1/8	3.2			1/8	3.2		
	5/32	4.0			3/16	4.8		
RFe5b-B	3/16	4.8	14	350	1/4	6.4	8 to 14	200 to 350
	1/4	6.4	18	450	5/16	8.0		
RFeCr-Al	5/16	8.0	28	700	3/8	9.5		
	3/8	9.5			3/8	9.5		
RCoCr-A					1/8	3.2		
					5/32	4.0	8	200
RCoCr-B					3/16	4.8		
					1/4	6.4	to	to
RCoCr-C					5/16	8.0		
					3/8	9.5	24	610
RCuZn-E	1/4	6.4	36	900				
	1/16	1.6						
RCuSi-A	3/32	2.4						
ERCuSn-A[e]	1/8	3.2						
RCuSn-D	5/32	4.0	36	900				
ERCuAl-A2[e]	3/16	4.8						
ERCuAl-A3[e]	1/4	6.4						
	3/32	2.4						
RCuAl-C	1/8	3.2						
RCuAl-D	5/32	4.0	36	900				
RCuAl-E	3/16	4.8						
	1/4	6.4						
					5/32	4.0		
RNiCr-A					3/16	4.8		
RNiCr-B					1/4	6.4	8 to 24[d]	200 to 610[d]
RNiCr-C					5/16	8.0		
					3/8	9.5		

a. Diameters shall not vary more than ±15 percent from the nominal. All classifications are not available in all diameters.
b. Lengths shall not vary more than the following from the standard:
   28 in. (700 mm) and shorter ..... ±1/4 in. (6.4 mm)
   36 in. (900 mm) ..... ±3/8 in. (10 mm)
c. Diameters shall not vary more than ±1/32 in. (0.8 mm) from the nominal.
d. Longer lengths, up to 12 ft (3660 mm), can be furnished upon agreement between supplier and purchaser.
e. These classifications are also available wound on spools in conformance to the latest edition of AWS A5.7, Specification for Copper and Copper Alloy Bare Welding Rods and Electrodes.

TABLE 4
STANDARD SIZES AND LENGTHS OF COVERED ELECTRODES

AWS Classification	Wrought core wire				Cast core wire			
	Diameter,		Length,		Diameter,		Length,	
	in.	mm[a]	in.	mm[b]	in.	mm[d]	in.	mm
EFe5-A	1/8	3.2			1/8	3.2	8 to 14	200 to 350
EFe5-B	5/32	4.0	14	350	3/16	4.8		
EFe5-C	3/16	4.8	18	450	1/4	6.4	10 to 14	250 to 350
EFeMn-A	1/4	6.4	28	700	5/16	8.0		
EFeCr-Al	5/16	8.0			3/8	9.5		
					1/8	3.2		
					5/32	4.0		
ECoCr-A	3/32	2.4	12	300	3/16	4.8		
ECoCr-B	1/8	3.2	14	350	1/4	6.4	10 to 14	250 to 350
ECoCr-C	5/32	4.0	13	450	5/16	8.0		
	3/16	4.8	18	450	3/8	9.5		
ECuSi,								
ECuAl-A2	3/32	2.4	11	280				
ECuAl-B	1/8	3.2						
ECuAl-C	5/32	4.0	14	350				
ECuAl-D	3/16	4.8						
ECuAl-E	1/4	6.4	18	450				
ECuSn-A								
ECuSn-C								
					5/32	4.0		
ENiCr-A					3/16	4.0		
ENiCr-B					1/4	6.4	8 to 14	200 to 350
ENiCr-C					5/16	8.0		
					3/8	9.5		

a. Diameters shall not vary more than the following from the nominal:
5/32 in. (4.0 mm) and smaller ..... ±0.003 in. (0.08 mm)
Over 5/32 in. (4.0 mm) ..... ±0.004 in. (0.10 mm)
b. Lengths of wrought core wire shall not vary more than ±1/4 in. (6.4 mm) from the nominal.
c. Diameters shall not vary more than ±1/32 in. (0.8 mm) from the nominal.

WARNING: Protect yourself and others. Read and understand this label. FUMES AND GASES can be dangerous to your health. ARC RAYS can injure eyes and burn skin. ELECTRIC SHOCK can kill.

- Read and understand the manufacturer's instructions and your employer's safety practices.
- Keep your head out of the fumes.
- Use enough ventilation, exhaust at the arc, or both, to keep fumes and gases from your breathing zone and the general area.
- Wear correct eye, ear, and body protection.
- Do not touch live electrical parts.
- See American National Standard Z49.1, Safety in Welding and Cutting, published by the American Welding Society, 2501 N.W. 7th Street, Miami, Florida, 33125; OSHA Safety and Health Standards, 29 CFR 1910, available from the U.S. Government Printing Office, Washington, D. C. 20402.

DO NOT REMOVE THIS LABEL

2.7.5 For oxyfuel rods, all packages of filler metal, or all individually packaged units enclosed within a larger package(s), shall carry the following precautionary label or its equivalent, as a minimum, prominently displayed in legible type:

WARNING: Protect yourself and others. Read and understand this label. FUMES AND GASES can be dangerous to your health. HEAT RAYS (INFRARED RADIATION from flame or hot metal) can injure your eyes.

- Read and understand the manufacturer's instructions and your employer's safety practices.
- Keep your head out of the fumes.
- Use enough ventilation, exhaust at the flame, or both, to keep fumes and gases from your breathing zone and the general area.
- Wear correct eye, ear, and body protection.
- See American National Standard Z49.1, Safety in Welding and Cutting, published by the American Welding Society, 2501 N.W. 7th Street, Miami, Florida, 33125; OSHA Safety and Health Standards, 29 CFR 1910, available from the U.S. Government Printing Office, Washington, D.C. 20402.

DO NOT REMOVE THIS LABEL

2.8 Electrode Identification. All covered electrodes shall be identified in accordance with the following:

2.8.1 At least one legible imprint of the applicable AWS classification shall be applied to the electrode covering as near as practical to the grip end of the core wire, but not more than $2\frac{1}{2}$ in. (65 mm) from that grip end.

2.8.2 The numbers of the imprinted electrode classification shall be of bold block type and of sufficient size to be legible.

2.8.3 The ink used for imprinting shall provide sufficient contrast with the electrode covering so that the numbers and letters are legible, both before and after normal welding applications.

2.8.4 The prefix letter E in the electrode classification may be omitted from the imprint of the electrode covering.

2.9 Rounding-off Procedures. For purposes of determining conformance with this specification, an observed or calculated value shall be rounded off to the nearest unit in the last right-hand place of figures used in expressing the limiting value for other values in accordance with the rounding-off method of ASTM E29, Recommended Practice for Indicating Which Places of Figures are to be Considered Significant in Specified Limiting Values.[3]

2.10 Certification. For all material furnished under this specification, the manufacturer certifies (by meeting the requirements of 2.7) that the material, or representative material, has passed the tests required for classification by this specification. When required by the purchaser, the manufacturer shall furnish a copy of the results of those tests.

3. Details of Tests

3.1 Required Tests. The tests specified in 1.3 and 1.4 shall be conducted in accordance with the requirements of this Section 3. Usability tests and chemical analysis may be made on welding rods and electrodes of any size.

3.2 Materials for Test Plates. The base metals for both the usability test and chemical analysis shall

[3] ASTM Standards can be obtained from the American Society for Testing and Materials, 1916 Race Street, Philadelphia, PA 19013.

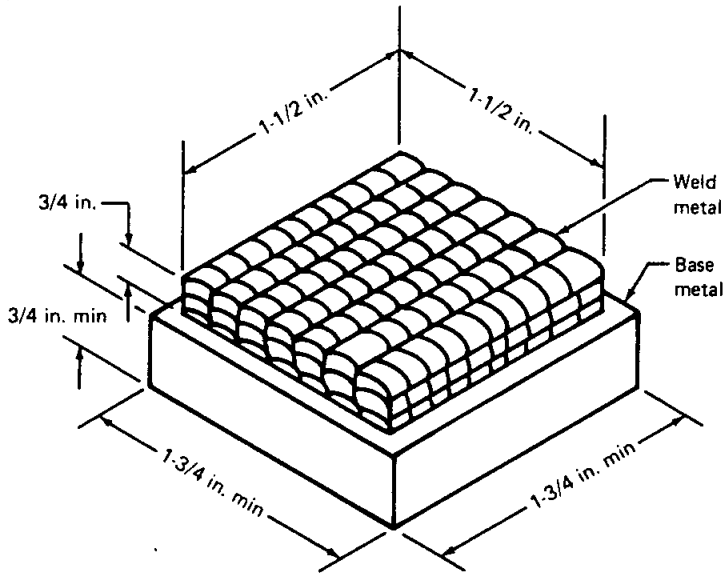

SI Equivalents

in.	mm
3/4	19
1-1/2	38
1-3/4	44

FIG. 1 CHEMICAL ANALYSIS TEST PAD

conform to one of the following specifications or their equivalent:

3.2.1 ASTM Specification A285, Pressure Vessel Plates, Carbon Steel, Low and Intermediate Tensile Strength, Grade A or equivalent

3.2.2 ASTM Specification A36, Structural Steel

3.3 Usability Test

3.3.1 A test pad shall be prepared using techniques, position, and other factors as specified by the manufacturer.

3.3.2 The surface of the pad shall be ground smooth and clean, after which the surface shall be visually examined.

3.4 Chemical Analysis

3.4.1 Chemical Analysis of Bare Welding Rods and Electrodes. An adequate sample of bare welding rod or electrode, sufficient for retest if necessary, shall be obtained to make the prescribed chemical analysis.

3.4.2 Chemical Analysis of Covered Electrodes

3.4.2.1 All surfacing on the chemical analysis pad shall be done in the flat position.

3.4.2.2 For covered electrodes, the test pad shall be prepared as shown in Fig. 1, using the welding procedures specified by the manufacturer as to factors not covered herein. The full length of each covered electrode shall be used, with the stub length not to exceed 1-$^3/_4$ in. (45 mm).

3.4.2.3 The top surface of the test pad shall be removed and discarded, and an adequate sample of weld metal, sufficient for retest, if necessary, shall then be removed from the test pad by any appropriate means. Postweld heat treatment may be used to soften the test pad to facilitate removal. Metal for the sample shall not be removed closer than $^1/_4$ in. (6.4 mm) from the base metal. No oil or other lubricant shall be used when removing the sample.

3.4.2.4 Chemical analysis may be made by any suitable method agreed upon by the manufacturer and the purchaser.

Appendix: Guide to AWS Classification of Surfacing Welding Rods and Electrodes

A1. Introduction and Classification System

A1.1 Introduction. This guide is appended to the specification as a source of information; *it is not mandatory and does not form a part of the specification.* The specification itself is intended to provide both the manufacturer and the purchaser with a means of production control and a basis of acceptance through mutually acceptable, sound, standard requirements. This guide has been prepared as an aid to prospective users of the welding rods and electrodes covered by the specification in determining which classification of filler metal is best suited for a particular application, with due consideration to the particular requirements for that application.

A1.2 Classification System

A1.2.1 The system for identifying welding rod and electrode classifications used in this specification follows the standard pattern used in other AWS filler metal specifications. The letter E at the beginning of each classification indicates an electrode, and letter R indicates a welding rod. The letters ER indicate a filler metal that may be used as either a bare electrode or rod. The letters immediately after the E, R, or ER are the chemical symbols for the principal elements in the classification. Thus, CoCr is cobalt-chromium alloy, CuZn is a copper-zinc alloy, etc. Where more than one classification is included in a basic group, the individual classifications in the group are identified by the letters A,B,C, etc., as in ECuSn-A. Further subdividing is done by using a 1,2, etc., after the last letter, as the 2 in ECuAl-A2.

A1.2.2 Some years ago, the committee designated surfacing filler metals as shown in Table A1. The correlation between these old designations and the new classifications covered by this specification is indicated in Table A2.

A1.3 Ventilation during Welding

A1.3.1 Three major factors in arc welding that govern the amount of contamination to which welders or welding operators may be exposed are:

A1.3.1.1 Dimensions of space in which welding is to be done (with special regard to height of ceiling)

A1.3.1.2 Number of welders or welding operators working in that space

A1.3.1.3 Possible evolution of hazardous fumes, gases, or dusts according to the metals and shielding gases involved

A1.3.2 American National Standard Z49.1, Safety in Welding and Cutting, discusses the ventilation that is required during welding and should be referred to for details. Attention is particularly drawn to Section 8, "Health Protection and Ventilation."

A2. RFe5 and EFe5 High-Speed Steel Filler Metals

A2.1 Introduction and Applications. The RFe5 welding rods and EFe5 electrodes have proved very popular for applications where hardness is required at service temperatures up to 1100° F (595° C) and where good wear resistance and toughness are also required. These filler metals are essentially high-speed steels, modified slightly for welding applications.

The three classifications are approximately interchangeable, except that Fe5-A and Fe5-B (with high carbon) are more suitable for cutting and machining (edgeholding) applications; EFe5-C (with lower carbon) is most suitable for hot working and for applications requiring toughness. Some typical surfacing applications are cutting tools, shear blades, reamers, forming dies, shearing dies, guides, ingot tongs, broaches and other similar tools.

A2.2 Hardness. The Rockwell hardness of the undiluted Re5 filler metals in the as-welded condition is in the range of C 55 to C 60. Where a machining operation is required, hardness may be reduced to approximataly C 30 by an annealing treatment.

A2.3 Hot Hardness. Hardness at elevated temperatures (hot hardness) is a very important property of

TABLE A1
SURFACING FILLER METALS
(OLD DESIGNATIONS)

I. Ferrous
  A. Hardenable alloys
    1. Carbon steels
      a. Low (0.19% C max)
      b. Medium (0.20–0.60%C)
      c. High (0.61–1.50%C)
    2. Low alloy steels
      a. Low carbon
      b. Medium carbon
      c. High carbon
      d. Cast-iron types
    3. Medium alloy steels
      a. Medium carbon
      b. High carbon
      c. Cast-iron types
    4. Medium high alloy
      a. Low carbon
      b. Medium carbon
      c. High carbon
      d. Cast-iron types (1.5% C min)
    5. High-speed steel
  B. Austenitic steels
    1. Chromium and Cr–Ni
      a. Low carbon
      b. High carbon, low nickel
      c. High carbon, high nickel
    2. High manganese
  C. Austenitic — not usually heat-treated
    1. High chromium iron
    2. High alloy iron
      a. 1.7 percent carbon
      b. 2.5 percent carbon
      c. Very high alloy
II. Cobalt base alloys
  A. Low alloy
  B. High alloy
III. Carbides
  A. Inserts
  B. Composite
  C. Powder
IV. Copper base
  A. Copper-zinc
  B. Copper-silicon
  C. Copper-aluminum
V. Nickel base
  A. Nickel-copper
  B. Nickel-chromium
  C. Nickel-chromium-tungsten-molybdenum
  D. Nickel-chromium-boron

TABLE A2
SURFACING FILLER METALS
(NEW CLASSIFICATIONS)

AWS classification	Old designation
Fe5	IA5
FeMn	IB2
FeCr	IC1
CoCr-A	IIA
CoCr-C	IIB
CuZn	IVA
CuSi	IVB
CuAl	IVC
NiCr	VB

weld deposits of these filler metals. Tungsten and molybdenum are probably the most influential elements present in obtaining this property. Due to the large size of these atoms and their low diffusion rates, the carbides do not coalesce but stay in very small particles. At temperatures up to 1100° F (595° C), the as-deposited Rockwell hardness of C 60 falls off very slowly to approximately C 47 (448 Brinell). At higher temperatures, it falls off more rapidly. At about 1200° F (650° C), the maximum Rockwell hardness is about C 30 (283 Brinell).

A2.4 Impact. The Fe5 filler metals as-deposited can only withstand medium impact without cracking. After tempering, the impact resistance is increased appreciably.

A2.5 Oxidation Resistance. Deposits of the Fe5 filler metals, because of the high molybdenum content, will oxidize readily. When heat treatments are required, a non-oxidizing furnace atmosphere salt bath or borax coating should be used to prevent decarburization.

A2.6 Corrosion Resistance. The Fe5 weld metal can withstand atmospheric corrosion, but is not effective in providing resistance to liquid corrosion.

A2.7 Abrasion. The high-stress abrasion resistance of these filler metals, as-deposited, at room temperature is much better than low carbon steel, but they are not considered high abrasion resistance alloys. Resistance to deformation at elevated temperatures up to 1100° F (593° C) is their outstanding feature, and this may aid hot abrasion resistance.

A2.8 Metal-to-Metal Wear and Mechanical Properties in Compression. Deposits of Fe5 filler metals are well suited for metal-to-metal wear, especially at elevated temperatures. They have a low coefficient of friction, and the ability to take a high polish and retain their hardness at elevated temperatures. The compressive strength is very good and will fall or rise with the tempering temperature used.

A2.9 Machinability. These filler metals, after deposition, often have to be annealed for machining operations. For machinability, when thoroughly annealed, they are rated at 65, as compared with a 1 percent carbon tool steel, which has a rating of 100. Full hardness can be regained by heat-treating procedures discussed herein.

A2.10 Identification. The Fe5 filler metals, in the hardened or as-desposited condition, are highly magnetic. When spark tested, they give off a very small, thin stream of sparks approximately 60 in. (1500 mm) long. Close to the grinding wheel, the spark is red; at the end, it is a straw color.

A2.11 Metallography. The Fe5 filler metals, when deposited, contain highly alloyed tetragonal martensite, highly alloyed retained austenite, and undissolved complex carbides. Molybdenum has been used to replace tungsten found in many other high-speed tool steels such as the 18-4-1 grade (18 percent tungsten, 4 percent chromium, and 1 percent vanadium). Molybdenum forms the same type of complex double carbide with iron and carbon as does tungsten. Since molybdenum is an element of smaller atomic weight than tungsten (approximately one-half), it will produce twice as many atoms of alloying elements in the steel as will tungsten when added in the same weight percentage. This appears to be a partial reason for the fact that 1 percent molybdenum can be substituted for approximately 2 percent tungsten. The carbon content of high-speed steel is usually fixed within narrow limits. Carbon as low as 0.5 percent will not permit maximum hardness because of the presence of appreciable amounts of ferrite. As the carbon increases, the quenched hardness increases because of the absence of ferrite and because of the increased amount of carbon dissolved in the austenite. Chromium is present in this deposit at 3.0 to 5.0 percent, as this appears to be the right percentage for the best compromise between hardness and toughness. In conjunction with the carbon content, chromium is mainly responsible for the great hardenability of this deposit.

A2.12 Heat Treatment. A summary of the heat-treating data follows:

Preheat. Preheat is usually used, although in some instances, no preheating is required. When a preheat is used, the minimum is 300° F (150° C).

Annealing (1550 to 1650° F) (845 to 900° C). This treatment is applicable only when dictated by machining requirements.

Hardening. Hardening is necessary only if part has been annealed for machining.

Preheat. 1300 to 1500° F (705 to 815° C).

Harden. 2200 to 2250° F (1200 to 1230° C), air or oil quench.

Double Temper. 1025° F (550° C) 2 hours air cool to room temperature; 1025° F (550° C), 2 hours, air cool to room temperature.

Due to the high molybdenum content of these filler metals, weld deposits are susceptible to decarburization at high temperature. Consequently, in heat treatment and annealing, care must be used to prevent decarburization.

A2.13 Welding Characteristics. The procedure for applying Fe5 filler metals is similar to that employed for other surfacing materials. The work must be carefully cleaned of all foreign material prior to welding. All cracked or spalled metal should be removed to ensure sound fusion of weld and base metals. Definite welding instructions depend upon the specific job and welding process to be employed. Preheating, although generally recommended, is not used in all surfacing applications but is dependent upon the shape, size, and composition of the part to be surfaced. Peening of each bead after deposition is sometimes employed to reduce stresses in the weldment.

A3. EFeMn Austenitic Manganese Electrodes

A3.1 Introduction and Applications. The two classifications of EFeMn electrodes are substantially equivalent except that the yield strength of EFeMn-B weld deposits is higher than that of EFeMn-A. For back work, the higher yield is considered an asset.

The applications where surfacing with EFeMn electrodes are most appropriate are those dealing with metal-to-metal wear and impact, where the work-hardening quality of the deposit becomes a major asset. Soft rock crushing operations, involving limestone or dolomite, for example, can also benefit from such protection. Abrasion by angular quartz particles does not seem to be altered in laboratory tests by work-hardening manganese steel. Severe service with quartz abrasion is best dealt with by using manganese steel as a tough base metal and surfacing with a martensitic iron. Under very high-stress conditions, such as those in a jaw crusher, experience may demonstrate that all wear-resistant metals except manganese steel are too brittle. Surface protection then becomes a matter of replacing worn metal with more EFeMn filler metal, which is common. Railway frogs and crossings are also reclaimed in this way. Extensive areas, as in crushers and power shovel parts, are usually protected with a combination of weld deposits and filler bars, which are flats and rounds of manganese steel, welded in place. Such protection may be applied up to 3 in.

(76 mm) thick, which is near the upper thickness limit of common surface protection methods.

A3.2 Hardness. The normal hardness of these weld deposits is 170 to 230 BHN, but this is misleading, since they work-harden very readily to 450 to 550 BHN.

A3.3 Hot Hardness. Reheating above 500 to 600° F (250 to 315° C) may cause serious embrittlement. Thus, hot hardness is not a property that can be exploited.

A3.4 Impact. The EFeMn electrodes, as-deposited, are usually considered the outstanding engineering materials for heavy impact service.

A3.5 Oxidation Resistance and Corrosion Resistance. The EFeMn weld metal is similar to ordinary carbon steels in this respect and is not oxidation or corrosion resistant.

A3.6 Abrasion. Resistance to high- and low-stress abrasion is moderate against hard abrasives like quartz, as shown by the following: Wet Quartz Sand Abrasion Factor — 0.75 to 0.85 (as compared to SAE 1020 Steel as 1.00). Dry Quartz Sand Erosion Factor — 0.41 to 0.56 (as compared to SAE 1020 Steel as 1.00). The assumption that abrasion resistance increases with hardness has not been confirmed with carefully controlled testing using quartz as an abrasive.

A3.7 Metal-to-Metal Wear and Mechanical Properties in Compression. Metal-to-metal wear resistance is frequently excellent. The yield strength in compression is low, but any compressive deformation rapidly raises it until plastic flow ceases. This behavior is an asset in battering, pounding, and bumping wear situations.

A3.8 Machinability. Machining is very difficult with ordinary tools and equipment; finished surfaces are usually ground.

A3.9 Identification. Because of the unusual response to healing of the EFeMn weld metal, correct identification before welding is very important. A small magnet and a grinding wheel usually suffice, since a clean ground surface is substantially nonmagnetic, and grinding sparks are plentiful in contrast to the nonmagnetic stainless steels.

A3.10 Metallography. The chief constituent of EFeMn weld deposits is austenite, the nonmagnetic form of iron that can hold considerable carbon in solid solution. Austenite that is nearly saturated with carbon is responsible for the properties of these filler metals.

The austenite is not entirely stable. It will reject some of the carbon at intermediate temperatures or during deformation. This takes the form of manganese-iron carbides as fine particles, as films at grain boundaries, as flat, brittle plates, and in pearlite. Carbide precipitation in any of these forms leads to increased hardness and brittleness. Deformation (work-hardening from pounding, etc.) raises hardness most effectively with the least loss in toughness. Carbide precipitation, caused by slow cooling from the completely austenitic range or by reheating the tough structure, is undesirable.

The normal tough structure of manganese steel is produced in manufacture by water quenching from above 1800° F (980° C). Weld deposits depend on modified compositions to approximate this toughness after air-cooling from the welding temperature.

A3.11 EFeMn-A (Nickel-Manganese). Nickel additions to the standard grade of manganese steel produce no apparent changes in yield strength, but there is a distinct bend toward higher elongation. The quenching rate is perhaps less critical, but quenching is still necessary to obtain the maximum toughness.

A lower carbon content is much more effective in conferring toughness without quenching. As added nickel seems to prevent the lower intrinsic toughness of the straight 12 percent Mn steels with low carbon, an alloy of 0.50 to 0.90 percent carbon and about 3 to 5 percent nickel has become popular for welding electrodes. This alloy exhibits greater resistance to embrittlement from reheating up to 800° F (425° C) than the standard grade.[4]

A3.12 EFeMn-B (Molybdenum-Manganese). The addition of molybdenum to manganese steel tends to raise its yield strength. Like nickel, it increases the toughness of the lower carbon types and can be used interchangeably to produce a satisfactory welding electrode. Either approximately 3 to 5 percent nickel or ½ to 1-½ percent molybdenum will stabilize the tensile strength of the low carbon type near the standard level of 120,000 psi (827 MPa) after heat treatment. The associated elongation with ½ to 1-½ percent molybdenum is not so high, but it has a compensating higher yield strength. Deposits of EFeMn-B elecbodes have given satisfactory performance in such exacting applications as railway switches and frogs, where battered down castings are rebuilt with molybdenum-manganese weld deposits.

[4] Specification for Austenitic Manganese Steel Castings (ASTM Designation: A 128)

A3.13 Heat Treatment. Weld deposits are usually not heat-treated, since the filler metals are formulated to be "air toughening." However, it sometimes may be advisable to heat-treat a weldment to restore the toughness of a manganese base embrittled by too much reheating. Water quenching after 2 hours at 1850° F (1010° C) is usually sufficient for this purpose. The weld deposit should be free of cracks if this is to be done; otherwise, oxidation of the cracks may cause considerable structural damage and cancel the benefits of the toughening heat treatment.

A3.14 Welding Characteristics

A3.14.1 If EFeMn filler metal is deposited on carbon or low alloy steel, the transition zone may be too low in manganese and thus, develop a martensitic structure, which can permit spalling of the weld deposit because of brittleness. Such use of an austenitic manganese steel overlay for abrasion resistance is generally not recommended, since an air-hardening steel or martensitic iron is usually more satisfactory.

A3.14.2 Manganese steel is so popular for battering metal-to-metal wear that it has seen considerable service as an overlay on carbon steels despite its tendency to develop martensite. For many years, it has been used as an overlay on large steel mill coupling boxes, pinions, spindles, and other items working under heavy impact load. Cracking has been observed, but since the contacting faces are enclosed, highly stressed edges are avoided, and, perhaps because large surface areas are in contact, the surface protection technique has been considered satisfactory. Four layers of the manganese steel overlay are recommended.

A3.14.3 Not all users of this procedure may be so fortunate in avoiding trouble from the brittle fusion zone. One way to avoid cracking is to "butter" the carbon steel with a layer of austenitic stainless steel. This blends well with carbon or low alloy steels and manganese steel without forming brittle structures. The EFeMn filler metal may then be welded on top of the stainless steel deposit without sacrificing the toughness of austenite.

A3.14.4 Bare EFeMn electrodes are sometimes used. Acceptable welds can be produced with sufficient power, and the high melting rates are considered an asset. Covered electrodes permit the use of lower power, are easier for an inexperienced welder to use, and minimize annoying short circuits in restricted space, but generally have a lower melting rate. Direct current, reverse polarity is preferred for both covered and bare electrodes.

A3.14.5 While manganese steel has high ductility when strained in one direction, the two- and three-dimensional stresses that occur in weld deposits can and frequently do cause failure with no apparent ductility. The undesirable weld bead tensile stresses that develop on cooling can be changed to compressive stress by peening the deposit. Such peening, preferably with a pneumatic hammer, flows the outer surface, and the deformation relieves the tension that would otherwise cause cracks. The opening, for which a machinist's ball peen hammer is suitable, should be done promptly after deposition of one or even half an electrode. In no case should a bead longer than 9 in. (230 mm) be left without immediate peening.

A3.14.6 The weld metal is weakest while hot. Since it is easiest to deform at red or yellow heats and since cracking is most likely to occur above 1500° F (815° C), it is advisable to peen the bead as quickly as practicable.

A3.14.7 There is experimental evidence that arc power, arc length, bead size, and melting rate are related to bead cracking. Unless the beads can be quickly and properly peened, arc power above 3.5 kw or melting rates above 12 in./min (5.1 mm/s) should be avoided. In any case, a weaving bead that has a cross-sectional area greater than 0.18 in.^{2} (116 mm^2) (for example 0.8 in. [20 mm] wide by 0.2 in. [5 mm] high above the base; which may mean about 0.40 in. [10 mm] thick) is desirable. These conditions may not prevent underbead cracking, but they should minimize fissuring in the weld.

A3.14.8 Much use of surfacing with EFeMn electrodes is to build up worn manganese steel parts. To avoid embrittling this base metal, it should be kept below 500° F (260° C) within 2 in. (51 mm) from the weld by water cooling, interrmittent welding, or other procedures.

A4. RFeCr-A and EFeCr-A Austenitic High Chromium Iron Filler Metals

A4.1 Introduction and Applications. The RFeCr-A welding rods and EFeCr-A electrodes have proved very popular for facing agricultural machinery parts. Arc welding is used on heavy materials and large areas; oxyfuel welding is used for thin sections. Plowshares can be considered as a typical application because these filler metals flow well enough to produce a thin edge deposit, and the wear conditions in sandy soil are typically those of erosion or low-stress scratching abrasion. It is significant that the FeCr-A filler metals

become unsuitable in very rocky soil because of the associated impact. Industrial applications include coke chutes, steel mill guides, sandblasting equipment, brick making machinery, etc.

A4.2 Hardness. The as-welded hardness when deposited by oxyfuel welding will vary with carbon content. The average Rockwell hardness of 104 production quality control tests was C 56.1 with an observed range of C 51 to C 62, representing a range of 4.3 to 5.2 percent carbon. Macrohardness values, such as Rockwell or Brinell numbers, will increase slowly as carbon increases. Such figures reflect the greater proportion of the hard carbides in the softer matrix but do not reliably indicate abrasion resistance. Since dilution is not expected in normal oxyfuel welding, the chief variable is carbon pickup from the flame adjustment. With a 3x feather-to-cone reducing flame, a pickup of 0.4 percent carbon has been observed if the welding rod is on the low side of the carbon range. On the high side of the carbon range, a neutral flame can slightly decarburize the deposit.

The austenitic matrix can work-harden somewhat under impact, but since the consequent deformation leads to cracking, impact service is avoided.

A4.3 Hot Hardness. Hardness falls slowly with increasing temperatures up to about 800 to 900° F (425 to 480° C) and thereafter falls rapidly and also becomes strongly affected by creep. At 900° F (480° C), the instantaneous Rockwell hardness is about C 43, and 3 minutes under load will cause an apparent drop to near C 37. At 1200° F (650° C), the instantaneous value may be no higher than C 5, and the apparent loss due to creep in 3 minutes may be as much as 45 points on the "C" scale. However, the loss of hardness due to tempering is negligible in comparison with many martensitic alloys, and the drop in hardness shown by hot testing is practically recovered on cooling to ordinary temperatures. Very little is known about the resistance of these filler metals to thermal shock and thermal fatigue.

A4.4 Impact. FeCr-A deposits may withstand very light impact without cracking, but cracks will form readily if blows produce plastic deformation. These filler metals are seldom used under conditions of medium impact and are generally considered unsuitable for heavy impact where cracking is objectionable. Dynamic compression stresses above 60,000 psi (413 MPa) should be avoided.

A4.5 Oxidation Resistance. The high chromium content of these filler metals confers excellent oxidation resistance up to 1800° F (980° C) and they can be considered for hot wear applications where their hot plasticity is not objectionable.

A4.6 Corrosion Resistance. The matrix chromium content of the deposited FeCr-A filler metals is comparatively low and, thus, not very effective in providing resistance to liquid corrosion. These deposits will rust in moist air and are not stainless, but are more stable than ordinary iron and steel.

A4.7 Abrasion. Resistance to low-stress scratching abrasion is outstanding and is related to the volume of the hard carbides. Deposits of FeCr-A will wear about one-eighteenth as much as soft (SAE 1020) steel against rounded quartz sand grains and against sharp angular flint fragments. As stress on the abrasion increases, their performance declines. As deposited, FeCr-A is only mediocre under high-stress grinding abrasion and is usually not advantageous for such service.

A4.8 Metal-to-Metal Wear. Low-stress abrasion produces a good polish with a resulting low coefficient of friction. Where the polish is produced by mediocre wear, performance is also good. Resistance to galling is considered better than for ordinary hardened steel because tempering from frictional heat is negligible. Austenite alone is prone to gall, and its presence may lead to unfavorable performance. Also the hard carbides can stand in relief through wear of the austenite and cut or cause excessive wear of a mating surface. Therefore, metal-to metal service should be approached cautiously. Rolling mill guides have been found to be appropriate applications.

A4.9 Mechanical Properties in Compression. In compression, the deposited FeCr-A filler metals are expected to have a yield strength (0.1 percent offset) of between 80,000 and 140,000 psi (551 to 965 MPa) with an ultimate strength from 150,000 to 280,000 psi (1034 to 1930 MPa). They will show about 1 percent elastic deformation and tolerate from 0.5 to 3 percent additional plastic deformation before failure at the ultimate. Like other cast iron types, their tensile strength is low, and tension should be avoided in designs for their use.

A4.10 Machinability. The FeCr-A deposits are considered commercially unmachinable with cutting tools and are also very difficult to grind. For machine shop use, the recommended grinding wheels are aluminum oxide abrasive with a 24-grit size, hard (Q) and medium space resinoid bond for off hand high-speed work, and a slightly softer (P) vitrified bond for off-hand low-speed use.

A4.11 Identification. When welding rods are mixed, the FeCr-A filler metals can frequently be identified by (1) brittleness of the cast rod, (2) nonmagnetic behavior, (3) their very dull, lifeless spark that is short and produced with difficulty, and (4) sometimes by the presence of fine needle-like Cr_7C_3 crystals on a fracture section. A spot test for cobalt (see A5.11, "CoCr Identification") will distinguish it from the somewhat similar CoCr-C filler metals. The magnetic permeability is about 1.03 with a magnetizing force of 24 oersteds.

A4.12 Metallography. Deposits of these filler metals consist of hard carbides of the chromium carbide (Cr_7C_3) type dispersed in a matrix of austenite that is stable during slow coolng. The FeCr-A classification does not apply to those high chromium irons that are subject to pearlite fomation, martensitic hardening, and other manifestations of austenite transformation.

The Cr_7C_3 carbides have a diamond pyramid hardness (DPH) or Vickers pyramid number (VPN) of approximately 2000, are harder than quartz, and, thus, confer resistance to scratching abrasion by most common materials. The austenite matrix is softer (about 450 DPH) and somewhat plastic. It can be eroded from around the carbides and may not give them competent support under conditions of high-stress abrasion. The austenite is rich in dissolved carbon as welded. Much of it separates out as spine-like crystals of Cr_7C_3 during cooling; some crystallizes as smaller particles, and some remains in solid solution. The hard carbides are brittle and fracture readily.

A4.13 Heat Treatment. The austenite, which is stabilized partly by dissolved chromium and partly by manganese, does not transform by usual steel hardening reactions. It can precipitate some carbon in dispersed form during aging heat treatments, but this hardening is minor and is neglected in practical surfacing operations.

A4.14 Welding Characteristics. In oxyfuel gas welding, flat position welding with a 3X feather-to-cone reducing flame is recommended. The coefficient of thermal expansion is about 50 percent greater than that of carbon steels and irons. Contraction stresses are prone to crack the deposit, and, while these cracks may do no harm, they may be minimized by preheating and postheating techniques. The use of a flux may be helpful in dealing with dirt, scale, and other undesirable surface contamination; but on a clear, bright metal surface such as grinding produces, flux is ordinarily unnecessary. A good bond can be produced on all iron base materials, provided the base metal is not damaged by the high temperature conditions of welding and weld cooling. In arc welding, the procedure for applying FeCr-A filler metals is similar to that used for other surfacing electrodes.

TABLE A3
USUAL HARDNESS OF COBALT-BASE WELD DEPOSITS (70°F) (21°C)

	Hardness, Rockwell C		
	CoCr-A	CoCr-B	CoCr-C
Oxyfuel gas welded	38 to 47	45 to 49	48 to 58
Arc welded	23 to 47	34 to 47	43 to 58

a. Lower values can be expected in single layer deposits due to dilution with the base metal.

A5 RCoCr and ECoCr Cobalt-Base Filler Metals

A5.1 Introduction and Applications. The contact surfaces of exhaust valves in aircraft, truck, bus, and diesel engines are frequently surfaced with the softer alloys. Much CoCr-A filler metal is used for this purpose. Its success is attributed to its combination of heat, corrosion, and oxidation resistance. It is also used for valve trim in steam engines, on pump shafts, and on similar parts subject to corrosion and erosion. The higher carbon filler metals, CoCr-B and CoCr-C, are used in those applications where greater hardness and abrasion resistance are needed, but where impact resistance is not mandatory.

A5.2 Hardness. The usual hardness ranges are shown in Table A3. CoCr-A filler metal is usually employed as a precise oxyacetylene welded overlay with little if any base metal dilution. When so deposited, it is likely to be near Rockwell C 42 in hardness.

CoCr-C filler metal may be used for wear resistance in rougher service where precision and quality are less important but hardness and carbide volume may be significant. Oxyfuel gas deposits are expected to be near Rockwell C 55, which is comparable to the hardness of the austenitic chromium irons (FeCr-A). Arc welded deposits are much more variable. Some experience with these is shown in Table A4.

Many surfacing alloys are softened permanently by heating to elevated temperatures. CoCr filler metals are an exception. While they do exhibit lower hardness while hot, they return to approximately their original hardness upon cooling and can be considered immune to tempering.

TABLE A4
ARC WELDED DEPOSITS

Room temperature hardness data on CoCr-C arc welded deposits

Sample	Carbon, percent	Average hardness		Average hardness by layers					
				Brinell			Rockwell C		
		Rockwell C	Brinell	1	2	3	1	2	3
B	2.28	47	465	389	497	509	41	48	53
G	1.83	40	391	328	399	444	32	43	47
H	2.12	49	437	368	455	489	44	51	53
E	2.95	47	448	381	433	528	42	46	53

Range of hardness observed from 3 coupons for each sample, 3 readings for each of 3 positions on each of 3 layers

Sample	Brinell Hardness			Rockwell C Hardness		
	1	2	3	1	2	3
B	357 to 440	443 to 557	390 to 640	33 to 46	38 to 50	48 to 56
G	297 to 353	373 to 415	429 to 478	27 to 35	38 to 45	44 to 50
H	324 to 384	413 to 483	450 to 514	41 to 45	41 to 53	51 to 56
E	351 to 443	322 to 514	465 to 578	37 to 45	34 to 53	50 to 55

TABLE A5
INSTANTANEOUS HARDNESS VALUES

Temperature		CoCr-A					CoCr-C			
		Rockwell C for sample number given					Rockwell C for sample number given			
°F	°C	B	G	H-a	H-b	E	B	G	HJ	E
650	345	29.6	33.3	26.5	29.8	41.0	43.7	35.7	41.2	46.1
850	455	24.3	26.8	21.5	28.5	36.6	41.0	31.9	38.0	40.6
1050	565	20.0	21.8	19.1	22.7	32.2	35.6	29.8	35.1	30.5
1200	650	15.9	19.7	16.4	21.8	25.8	29.9	24.3	29.0	27.9
1400	760	46.8[a]	45.8[a]	44.7[a]	49.8[a]	49.8[a]	53.9[a]	53.0[a]	53.4[a]	51.3[a]

a. These are Rockwell A values.

A5.3 Hot Hardness. Elevated temperature strength and hardness are outstanding properties of this group. They are generally considered superior to other surfacing alloys where these properties are required above 1200° F (650° C). In the range from 1000 to 1200° F (540 to 650° C), their relative advantage is not always clear, and below 1000° F (540° C) other classifications may be better. The hot hardness expectancy is shown in Table A5. Creep, which is plastic flow that occurs under sustained loading, is ordinarily a high temperature problem. In weld deposits, it appears as a slow yielding; in hardness tests, this shows as an apparent lowering of hardness as the time period of a hardness indentation is increased. Evidence of this is shown in Table A6. At temperatures above 1000 to 1200° F (540 to 650° C), weld deposits of these CoCr filler metals have greater resistance to creep than other commercially available surfacing alloys for which data are available. This distinction and their hardness at 1200° F (650° C) and above are the primary reasons for their selection for use in many applications.

A5.4 Impact. Resistance to flow under impact increases with carbon content in this group. CoCr-C weld deposits are quite brittle and crack readily when impact flow does occur. CoCr-A deposits, while they deform more easily can withstand some plastic flow under

TABLE A6
AVERAGE HARDNESS WITH 1- AND 4-MINUTE HOLDING TIMES

Time under load	Temperature, °F	Temperature, °C	CoCr-A Brinell hardness for sample number given B	G	H-a	H-b	E	CoCr-C Brinell hardness for sample number given B	G	H	E
1 min	850	455	297	320	291	309	388	381	319	426	429
4 min	850	455	307	350	269	306	376	394	304	409	422
1 min	1200	650	250	274	221	250	304	363	268	326	328
4 min	1200	650	235	243	237	220	278	363	234	296	298

compression before cracking. However, a tough martensitic steel is considered superior in both flow resistance and toughness.

A5.5 Oxidation Resistance. The presence of over 25 percent chromium promotes the formation of a thin, tightly-adherent protective scale under oxidizing condtions. For deposits of these filler metals at temperatures up to 1800° F (980° C), this means a scaling rate below 0.10 in. (2.5 mm) per year in common oxidizing atmospheres. Scaling resistance to combustion products of internal combustion engines is also generally adequate, even in the presence of lead compounds from "doped" fuels.

A5.6 Corrosion Resistance. CoCr filler metals, as deposited, are recognized as "stainless" and are frequently useful where both abrasion and corrosion are involved. They can be considered corrosion resistant in the less severe media, in foods, and in air, and they may even have good resistance in some corrosives such as nitric, acetic, citric, formic, lactic, sulfuric, sulfurous, and trichloracetic acids. However, if an application that involves corrosion is under consideration, general statements about corrosion should be confirmed by a field test, if possible. It should include all service factors, as minor variables are sometimes decisive. In any event, a recognized authority in the field of corrosion should be consulted.

A5.7 Abrasion. Carbon content has much to do with the response to abrasion. At 1.0 percent carbon (CoCr-A), the performance is inferior to that of carbon steel; at 2.5 percent carbon (CoCr-C), the resistance to high-stress grinding abrasion is good. Under the low-stress conditions of scratching abrasion, laboratory tests indicate that CoCr-C oxyfuel gas welds may wear at one-twentieth the rate of carbon steel, while for CoCr-A deposits, the rate is near one-fifth. There has been considerable field use of CoCr-C filler metal to withstand abrasion. Some of this experience dates back to the time when the cobalt-base filler metals were practically the only surfacing materials available. It should be noted that equivalent performance can currently be obtained with iron-base filler metals if heat and corrosion are unimportant service factors.

A5.8 Metal-to-Metal Wear. The CoCr filler metals are well suited for metal-to-metal wear because of their ability to take a high polish and their low coefficient of friction.

A5.9 Mechanical Properties in Compression. Some reported properties appear in Table A7.

A5.10 Machinability. None of the deposits from these filler metals is easily machinable, and the difficulties increase along with increased carbon content. However, CoCr-A deposits are regularly machined, preferably with sintered carbide tools. With deposits of CoCr-C classification, grinding is the accepted method of finishing.

A5.11 Identification. Filler metals of these three classifications may usually be distinguished by their relative hardness and brittleness. They are nonmagnetic and thus may be screened from the magnetic iron-base alloys. The spark test will differentiate them from austenitic manganese steel, FeMn. However, the austenitic chromium irons, FeCr-A, are so similar to the CoCr-C classification that the following test or some other test may be necessary for differentiation.

Identification Test. Clean 1- and 2-in. (25 and 51 mm) lengths of the filler metal and place in 250 mL beakers. Cover with dilute HCl (one part concentrated HCl and one part water), and heat. In a few minutes, the following may be observed:

TABLE A7
COMPRESSION PROPERTIES OF CAST COBALT-BASE ALLOYS

	CoCr-A	CoCr-C
Yield strength (0.1 percent offset), ksi	64 to 76	85 to 110
Ultimate compression strength, ksi	150 to 230	250 to 270
Plastic deformation, percent	5 to 8	1 to 2
Brinell hardness	350 to 420	480 to 550

a. Cast values are included because weld metal data are not available.

		SI equivalents			
ksi	MPa	ksi	MPa	ksi	MPa
64	441	85	586	230	1586
76	524	110	758	250	1724
		150	1034	270	1861

Filler metal	Color of solution	Dissolving action
CoCr-A	blue	slow
CoCr-B	blue	slow
CoCr-C	blue	slow
FeCr-A1	green	fast

A5.12 Metallography

A5.12.1 These filler metals contain 25 to 33 percent chromium, which confers oxidation resistance, and 3.0 to 14 percent tungsten, which promotes elevated temperature strength, while the cobalt base gives corrosion resistance and provides a stable solid solution matrix. Carbon is an important element that contributes strength and, in combination with chromium, forms hard carbides that may provide abrasion resistance. Different levels of carbon and tungsten are responsible for the distinctive properties of the three classifications.

A5.12.2 The solid solution matrix of CoCr weld deposits is harder than the austenite of the iron-carbon system and the chromium-nickel-iron stainless steels. In the matrix, complex carbides appear that increase the overall hardness and brittleness. In CoCr-A deposits, these may be small and well dispersed. In deposits of CoCr-C, characteristic spines and pseudohexagonal crystals, related to the Cr_7C_3 carbides of the high chromium irons (FeCr-A), are plentiful. They may be associated with many fine carbides, and complex eutectiferous structures are common. Structural complexity increases with carbon content as well as with other elements, such as iron, that mingle from base metal fusion.

A5.12.3 Oxyacetylene welding may increase the carbon content of the deposit, while arc welding tends to reduce carbon and at the same time dilute the CoCr deposit with elements from the base metal. These changes will be reflected in the structures.

A5.12.4 The solid solution matrix has a hardness near 40 Rockwell C. The Cr_7C_3 type carbides may be expected to show a Vickers microhardness between 1500 and 2000 VPN. However, despite the hard carbide crystals, the general hardness (as measured by Rockwell or Brinell tests) seldom exceeds Rockwell C 60 or 600 BHN because of the softer supporting matrix.

A5.13 Heat Treatment. The CoCr filler metals are not subject to hardening transformations like steel and have negligible response to heat treatment. Occasionally, a stress relief treatment may appear advisable to minimize cracking, but usually they go into service in the as-welded condition.

A5.14 Welding Characteristics. For oxyacetylene welding, a 3X feather-to-cone reducing flame is recommended. Preheating the cleaned surface with a neutral flame up to 800° F (425° C) is advisable for heavy sections. For shielded metal arc welding, dc reverse polarity is used, with a short arc. For a $\frac{1}{4}$-in. (6.4 mm) diameter electrode a current of approximately 190 to 200 A is recommended. All deposits should be cooled slowly to prevent cracking.

A6. Copper-Base Alloy Filler Metals

A6.1 Introduction and Applications. The copper-base alloy filler metals classified by this specification

are used to deposit overlays and inlays for bearing, corrosion resistant, and wear resistant surfaces.

ERCuAl-A2 filler metal and ECuAl-A2 electrodes are used for surfacing bearing surfaces between the hardness ranges of 130 to 190 BHN as well as corrosion resistant surfaces. The ERCuAl-A3, RCuAl-C, ECuAl-B, and ECuAl-C filler metals are used primarily for the surfacing of bearing surfaces requiring the higher hardness ranges of 140 to 290 BHN.

Classifications RCuAl-C, RCuAl-D, RCUAl-E, ECuAl-C, ECuAl-D, and ECuAl-E are used to surface bearing and wear resistant surfaces requiring the higher hardnesses of 230 to 390 BHN, such as gears, cams, sheaves, wear plates, dies, etc.

The RCuSi-A and ECuSi filler metals are used primarily for the surfacing of corrosion resistant surfaces. Generally, the copper-silicon deposits are not recommended for bearing service.

The copper-tin (CuSn) filler metals are used primarily to surface bearing surfaces where the lower hardness of these alloys is required, for surfacing corrosion resistant surfaces, and, occasionally, for wear resistant applications.

Many of the filler metals classified by this specification can also be used for joining like and dissimilar metals (see AWS A5.6-76, Specification for Copper and Copper Alloy Covered Electrodes, and AWS A5.7-77, Specification for Copper and Copper Alloy Bare Welding Rods and Electrodes) as well as for casting repairs.

A6.2 Hardness. Deposit hardness will vary with the welding process used and the manner in which the metal is deposited. For example, deposits made with the gas metal arc and gas tungsten arc process will be higher in hardness than deposits made with the oxyfuel gas and shielded metal arc processes, because lower losses of aluminum, tin, silicon. and zinc are encountered in the remelting process due to the better shielding from oxidation. In oxyfuel gas welding, excessive "puddling" of the molten weld metal will cause excessive losses of the hardening elements, producing deposits of lower hardness than those specified. See Table A8 for hardness ranges of these alloys.

A6.3 Hot Hardness. The copper-base alloy filler metals are not recommended for use at elevated temperatures since the mechanical properties and, especially, hardness will tend to decrease consistently as the temperature increases above 400° F (205° C).

A6.4 Impact. The impact resistance of CuAl-A2 deposits will be the highest of the copper-base alloy classifications. As the aluminum content increases, impact resistance decreases markedly, CuSi weld deposits have good impact properties. The CuSn filler metals, as-deposited, have low impact values, due to the coarse grain structure and the lower strength inherent in these alloys. The CuZn-E deposits have very low impact values.

TABLE A8
WELD DEPOSIT HARDNESS

AWS Classifications	Brinell hardness of deposit, 3000 kg load	500 kg load	Welding Process Applicable
ERCuAl-A2	130–150		GTAW, GMAW
ECuAl-A2	115–140		SMAW
ERCuAl-A3	140–180		GTAW, GMAW
ECuAl-B	140–180		SMAW
ERCuAl-C	250–290		GTAW
ECuAl-C	180–220		SMAW
RCuAl-D	310–350		GTAW
ECuAl-D	230–270		SMAW
RCuAl-E	350–390		GTAW
ECuAl-E	280–320		SMAW
ECuSi		80–100	SMAW
ERCuSi-A		80–100	OFW, GMAW, GTAW
ERCuSn-A		70–85	GRAW, GMAW
ECuSn-A		70–85	SMAW
ECuSn-C		85–100	SMAW
RCuSn-D		90–110	GTAW
RCuZn-E		130 min	OFW

A6.5 Oxidation Resistance. Deposits of the CuAl filler metals form a protective oxide coating upon exposure to the atmosphere. Oxidation resistance of the CuSi deposit is fair, while that of CuSn filler metals would be comparable to that of pure copper.

A6.6 Corrosion Resistance. These copper-base alloy filler metals are used rather extensively to surface areas subjected to corrosion from many acids, mild alkalies, and salt water. The only exception is filler metal of the CuZn-E classification. The filler metals producing deposits of higher hardness, that is, 120 to 200 BHN (3000 kg load), may be used to surface areas subjected to corrosive action as well as erosion from liquid flow for such applications as condenser heads and turbine runners.

A6.7 Abrasion. None of the copper-base alloy deposits is recommended for use where severe abrasion is encountered in service.

A6.8 Metal-to-Metal Wear. The CuAl filler metals producing deposits from 130 to approximately 390

BHN (3000 kg load) are used to overlay surfaces subjected to excessive wear from metal-to-metal contact, such as gears, cams, sheaves, wear plates, dies, etc. For example, CuAl-E filler metals are used to surface dies, both male and female, for drawing and forming stainless and carbon steels and aluminum.

All of the copper-base alloy filler metals classified by this specification are used to deposit overlays and inlays for bearing surfaces, with the exception of the CuSi filler metals. Silicon bronzes are considered poor bearing alloys. Copper-base alloy filler metals should be selected for a bearing surface producing a deposit of 50 to 75 Brinell hardness numbers under that of the mating metal or alloy. Equipment is designed so that the bearing will wear in preference to the mating part. Slight porosity in the deposit is sometimes acceptable for bearing service. In fact, CuZn-E, which is a leaded bronze, was designed to produce a porous deposit to retain oil primarily for additional lubrication purposes in the overlay of locomotive journal boxes.

A6.9 Mechanical Properties in Compression. Deposits of the CuAl filler metals have high elastic limits and ultimate strengths in compression ranging from 25,000 to 65,000 psi (172 to 448 MPa) and 120,000 to 171,000 psi (827 to 1174 MPa), respectively. The elastic limit of CuSi deposits is around 22,000 psi (152 MPa) with an ultimate strength in compression of 60,000 psi (414 MPa). The CuSn deposits will have an elastic limit of 11,000 psi (76 MPa), and an ultimate strength of 32,000 psi (221 MPa). The mechanical properties of the leaded bronzes, CuZn-E, are very low in compression with an elastic limit of about 5000 psi (34 MPa) and an ultimate strength of 20,000 psi (138 MPa).

A6.10 Machinability. All of these copper-base alloy deposits can be machined if a machined surface is required.

A6.11 Identification. All of the copper-base alloy deposits are nonmagnetic and non-sparking in the general sense of the word. In fact, so-called "non-sparking" tools are produced from some of the hard CuAl alloys listed in this specification.

A6.12 Metallography. The CuSi alloys are composed of alpha (single-phase) producing rather fine-grained deposits. The 5 to 8 percent phosphor bronzes, CuSn, have an alpha structure similar to alpha brass, but as the tin content increases, delta particles form. Unlike the CuSi alloys, deposits of CuSn filler metals have a coarse, dendritic grain structure unless precautions are taken during welding to refine the grain through hot peening or subsequent heat treatment, or both. Deposits of CuAl-A2 filler metals are composed of light colored alpha crystals in a darker colored beta matrix. As the aluminum content increases, light blue gamma particles will appear in the darker beta matrix in increasing amounts. CuAl alloys may be etched with either ferric chloride or ferric nitrate etchants. Deposits of the lead-tin alloy, RCuSn-E, will have an alpha structure with grey particles of free lead unevenly distributed throughout.

A6.13 Heat Treatment. Ordinarily, no heat treatment is needed in surfacing with copper-base alloy filler metals.

A6.14 Welding Characteristics. When surfacing iron-base metals or alloys with copper-base alloy filler metals, a minimum amount of dilution from the base metal is desired.

A6.15 Welding Rods. Generally, a preheat is not necessary unless the part is exceptionally large; in this case, a 200° F (93° C) preheat may be desirable to facilitate the smooth flow of the weld metal. At no time should the preheat temperature be above 400° F (205° C) when applying the first layer. On subsequent layers, an interpass temperature of approximately 200° F to 600° F (93 to 315° C) will simplify deposition of the weld metal.

Generally, a deposit thickness of $\frac{1}{4}$ in. (6.4 mm) is most desirable, built up with a minimum of three layers. If welding rods are used with the oxyacetylene, carbon arc, or gas tungsten arc processes, dilution from the base plate can be easily controlled by proper precoating (tinning) of the surface on the first layer. Excessive dilution from the base plate will produce hard spots in the deposit that are difficult to machine.

A6.16 Electrodes. In shielded metal arc or gas metal arc welding, base metal pickup can be held to a minimum only through the use of a fast, wide weave bead technique in depositing the initial layer. Generally, the initial layer should be made by weaving passes in widths four to six times the core wire diameter. Subsequent layers may be applied in any manner. The deposit should be at least $\frac{3}{16}$ in. (4.8 mm) in thickness in order to develop the hardness specified. Generally, a deposit thickness of $\frac{1}{4}$ in. (6.4 mm) is most desirable, built up with a minimum of three layers. On large sections, a preheat of 300° F (150° C) should be used, and interpass temperatures should not exceed 600° F (315° C).

TABLE A9
HARDNESS OF WELD DEPOSITS

AWS Classification	Number of layers	Oxyfuel gas weld deposit hardness, Rockwell C	Arc weld deposit hardness of covered and bare electrode, Rockwell C
NiCr-A	1	35 to 40	24 to 29
	2	35 to 40	30 to 35
NiCr-B	1	45 to 50	30 to 35
	2	45 to 50	40 to 45
NiCr-C	1	56 to 62	35 to 45
	2	56 to 62	49 to 56

A7. RNiCr and ENiCr Nickel-Chromium-Boron Filler Metals

A7.1 Introduction and Application. For the RNiCr welding rods and ENiCr electrodes, chemical composition as specified herein does not determine the physical properties as clearly as it does for the other filler metals classified by this specification. The overlapping composition ranges represent current commercial practices. Deposit hardness increases from NiCr-A to NiCr-C, but machinability and toughness decrease. Selection is generally based upon consideration of these factors.

Deposits of the NiCr filler metals have good metal-to-metal wear resistance, good low-stress scratch abrasion resistance, corrosion resistance, and retention of hardness at elevated temperatures. A few of their applications include use on seal rings, cement pump screws, valves, screw conveyors, and cams.

A7.2 Hardness. The hardness of arc and oxyfuel gas weld deposits is shown in Table A9. Deposits of NiCr filler metals work-harden to a greater degree when considerable iron dilution is present (one layer arc weld) than when there is less iron dilution (two layer arc weld). These filler metals are not normally used for their work-hardening properties, since this would usually imply more impact resistance than they possess.

A7.3 Hot Hardness. On arc and oxyfuel gas weld deposits, the Rockwell C hardness readings shown in Table A10 were obtained using single specimens, tested consecutively at three temperatures without previous heat treatment.

A7.4 Impact. Deposits of NiCr filler metal will withstand light impact fairly well. However, if the impact blows produce plastic deformation, cracks are certain to appear in the NiCr-C weld metal and less likely to appear in the NiCr-A and NiCr-B deposits.

A7.5 Oxidation Resistance. NiCr deposits are oxidation resistant up to 1800° F (980° C) because of their high nickel and chromium contents. However, incipient fusion may occur near this temperature, and use of these filler metals above 1750° F (955° C) is not recommended.

A7.6 Corrosion Resistance. Deposits of NiCr filler metal are completely resistant to atmospheric, steam, salt water, and salt spray corrosion. They are also resistant to the milder acids and many common corrosive chemicals. However, if an application that involves corrosion is under consideration, general statements about corrosion should be confirmed by a field test, if possible. It should include all service factors, as minor variables are sometimes decisive. In any event, a recognized authority in the field of corrosion should be consulted.

A7.7 Abrasion. The high carbon classification, NiCr-C, of this group has excellent resistance to low-stress scratching abrasion and is particularly valuable where such abrasion and corrosion are combined. Abrasion resistance is expected to decrease with decreasing carbon content. These filler metals are not recommended for high-stress grinding abrasion.

A7.8 Metal-to-Metal Wear. NiCr deposits have excellent metal-to-metal wear resistance and take a high polish under wearing conditions. They are particularly resistant to galling. These properties are best shown in the NiCr-C alloy.

A7.9 Mechanical Properties in Compression. Information on these properties is not available. However, data have been reported on some of the properties in compression of deposits of the NiCr-C filler metal as follows:

Modulus of elasticity psi (MPa)	32,000,000 (220 608)
Elastic limit, psi (MPa)	42,000 (290)
Yield strength, psi (MPa)	
(0.01 per cent offset)	92,000 (634)
(0.10 per cent offset)	150,000 (1034)
(0.20 per cent offset)	210,000 (1448)

All tests were run on duplicate specimens and the results are averaged.

A7.10 Coefficient of Expansion. The average coefficients of expansion (inches per inch per deg F [mm per mm per deg C]) for deposits of these filler metals are as follows:

NiCr-A	0.00000856 (0.00000476)
NiCr-B	0.00000841 (0.00000467)
NiCr-C	0.00000814 (0.00000452)

TABLE A10
HOT HARDNESS OF WELD DEPOSITS

AWS Classification	Loading interval, min	Rockwell C hardness of arc weld deposit			Rockwell C hardness of oxyfuel gas weld deposit		
		600°F (315°C)	800°F (430°C)	1000°F (540°C)	600°F (315°C)	800°F (430°C)	1000°F (540°C)
NiCr-A	0	30	29	24	34	33	29
	1	30	28	21	33	32	26
	2	30	28	20	33	32	26
	3	29	28	19	33	31	24
NiCr-B	0	41	39	33	46	45	42
	1	41	38	29	46	44	39
	2	41	38	28	45	43	38
	3	40	37	26	45	42	37
NiCr-C	0	49	46	39	55	52	48
	1	49	45	33	54	51	42
	2	48	45	32	54	51	41
	3	48	45	31	54	50	40

A7.11 Machinability. Deposits of NiCr filler metals may be machined with tungsten carbide tools by using slow speeds, light feeds, and heavy tool shanks. Deeper cuts and faster speeds can be obtained on the softer deposits than on the NiCr-C deposits. They are also finished by grinding, using a soft-to-medium vitrified silicon carbide wheel. They can be ground to between 2.2 and 4.4 μin. (0.052 and 0.113 μm) AA surface finish.[5] There is a tendency to load an aluminum oxide or resin-bonded wheel.

A7.12 Identification. NiCr deposits are nonmagnetic, having a permeability of 1.005 with a magnetizing force of 500 oersteds. When spark tested, they give off a short, dull, red spark without bursting. They have a higher fluidity and lower melting point than the cobalt-base filler metals, CoCr.

A7.13 Metallography. The microstructure of deposits of the NiCr filler metals consists of six-sided crystals of chromium carbides and globular white islands of chromium borides in a complex nickel eutectic (low melting) matrix. In many cases, no etchant is needed due to the character of the constituents. Polishing leaves the hard constituents standing out in relief to about the same degree as a mild etch. To accentuate the degree of relief, cold concentrated HCl or a mixture of 20 percent cold concentrated HCl and 80 percent glacial acetic acid may be used. The chromium borides have a hardness of aproximately 4000 VPN.

[5] ANSI standard B46.1 requires rms surface finish to be expressed as the arithmetic average (AA). AA = 1.11 rms.

In general, the chromium carbides and chromium borides are larger in oxyfuel gas weld deposits than in arc weld deposits. This is probably related to differences in cooling rates between the two welding processes.

A7.14 Heat Treatment. In order to prevent cracks when applying the NiCr filler metals to hardenable iron and steel alloys, preheat and postheat treatments should be used. All hardenable alloys should be preheated to 600 to 800° F (315 to 425° C). Water- and oil-hardening alloys should be slow cooled by placing them in an insulating medium or a furnace immediately after welding. Air-hardening steel should be isothermally annealed immediately after welding.

A7.15 Welding Characteristics

A7.15.1 The NiCr-B filler metal has a broad solidification range. This property, together with its low melting point, contributes to its lesser tendency to warp weldments. If it is desired to hot-form some special shape of the deposit to minimize grinding, the weldment may be heated to 1800 to 1975° F (980 to 1080° C), preferably by using an oxyacetylene torch. (1800 to 1975° F [980 to 1080° C] is in the solidification range of these alloys.) The deposit should not be held at this temperature, because it will start to flow. While in this broad range, it may be readily formed, using a suitable die and pressing by hand. It may also be shaped by scraping with a file or bar steel. Square

edges on the weld may be made in this manner. The deposit will hold its contour after this forming and regain its original hardness upon cooling to room temperature.

A7.15.2 For best results during oxyfuel gas welding, the piece to be welded should be free from oil, rust, scale, or other foreign matter. If the piece is to be undercut for surfacing, corners should be rounded. A neutral oxyfuel flame is recommended for the NiCr-C filler metal and reducing flames for the softer types, NiCr-A and NiCr-B. This gives the proper fluidity to the deposit. No flux is necessary for most applications. It is not necessary to "sweat" the surface of the base metal. These filler metals should be applied when the surface of the base metal is at a red heat. Large sections require bulk preheat to 600° F (315° C). The application is similar to brazing. The deposit will spread evenly and quietly over the heated portion of the base metal. The deposit should be smooth and should not have the normal weld appearance of a rippled surface and craters. Because of their low melting point and the brazing techniques used, these filler metals may be oxyfuel gas welded more rapidly and easily than most surfacing alloys.

A7.15.3 The NiCr filler metals may be applied to cast iron, steel, copper, and nickel-base alloys. For surfacing of high chromium steels, the fluidity is improved by using a slightly reducing flame with a feather approximately the length of the inner cone. If checking of the deposit occurs, preheating of the workpiece and slow cooling in an oven or insulating material will minimize this condition, and may eliminate checking entirely.

A7.15.4 These filler metals may be applied to low and medium carbon steels and austenitic stainless steels with no tendency for the base metal to crack. With high carbon steels and alloy steels, a preheat and postheat generally are necessary to prevent cracking of the base metal.

A7.15.5 When arc welding, the surface to be welded should be free from rust, dirt, oil, scale, and all foreign matter. The NiCr electrodes may be bare or covered. For best results, the electrode should be used on dc reverse polarity. The following current ranges are recommended:

Electrode diameter, in. (mm)	Current, A
3/16 (4.8)	130 to 180
1/4 (6.4)	180 to 240

A7.15.6 The minimum possible current setting should be used to prevent undue penetration. Preheating or post-heating depends upon the type of alloy being welded and should be sufficient to prevent cracking at the fusion zone. Arc weld deposits are slightly softer and less wear resistant than oxyfuel gas weld deposits due to dilution. Hardness and wear resistance are increased by building up with two layers instead of one. The bare electrode arc deposit of these alloys will be much sounder than the average bare electrode application due to their high boron content with resultant self-fluxing properties.

A7.15.7 These alloys, when in powder form, can be deposited by spraying to form a mechanically bonded overlay (metallizing) and then fused to a smooth, dense overlay with the same metallurgical bond as that obtained with welding rod deposits. Fused overlays up to 0.060 in. (1.5 mm) in thickness are practical on surfaces of almost any contour.

Bibliography

1. *The Welding Encyclopedia,* Seventeenth Edition, 1974.

2. *Welding Handbook,* Seventh Edition, Vol. 2, American Welding Society, *517-562.*

3. *Metal Handbook,* Eighth Edition, Vol. 6, American Society for Metals, *152-166.*

4. Avery, H.S., "Hot Hardness of Hard Facing Alloys," *Welding Journal,* July 1950, *552-578.*

5. "Surface Protection Against Wear and Corrosion." (A Symposium), Chapter 3, American Society for Metals, 1954.

6. Avery, H.S. and Chapin, H.J., "Hard Facing Alloys of the Chromium Carbide Type," *Welding Journal,* October 1952, *917-930.*

7. Avery, H.S., "Selecting Hard Facing Alloys to Resist Impact, Heat, Friction, and Abrasion," *Product Engineering,* March 1952.

8. Daemen, R., "Hard Surfacing, A Summary of Some Basic Principles," *W.I. Surfacing Journal,* Vol. 3, No. 4, October 1972, *4-9.*

9. Farmer, H.N., "Factors Affecting Selection and Performance of Hardfacing Alloys," (A Symposium), Vail, Colorado, July 30-31, 1974, Climax Molybdenum Co., *85-91.*

10. Wold, K.G., "Aluminum Brazes — Another Family of Hardfacing Alloys," *Welding Engineer,* Vol. 59, No. 8, August 1974, *9-11.*

11. Budinski, K.G., "Surfacing I: What a Designer Needs to Know," *Welding Design and Fabrication,* Vol. 49, No. 7, July 1976, *50-53.*

12. Bhansali, K.J. and Silence, W.L., "Metallurgical Factors Affecting Wear Resistance of Metals," *Metal Progress, Nov. 1977, 38-43.*

13. Redmam, J.E. "Hardfacing — Where and How to Use It," *Plant Engineering,* July 10, 1975, *95-97.*

SPECIFICATION FOR NICKEL AND NICKEL-ALLOY BARE WELDING ELECTRODES AND RODS

SFA-5.14

(Identical with AWS Specification A5.14/A5.14M-97.)

1. Scope

This specification prescribes requirements for the classification of bare nickel and nickel-alloy welding electrodes, strip electrodes, and welding rods. It includes those compositions where the nickel content exceeds that of any other element.

PART A — GENERAL REQUIREMENTS

2. Normative References

2.1 The following ANSI/AWS standards[1] are referenced in the mandatory sections of this document:

(a) ANSI/AWS A1.1, *Metric Procedure Guide for the Welding Industry.*

(b) ANSI/AWS A5.01, *Filler Metal Procurement Guidelines.*

2.2 The following ASTM standards[2] are referenced in the mandatory sections of this document:

(a) ASTM E29, *Practice for Using Significant Digits in Test Data to Determine Conformance with Specifications.*

(b) ASTM E38, *Standard Methods for Chemical Analysis of Nickel-Chromium and Nickel-Chromium-Iron Alloys.*

(c) ASTM E76, *Standard Methods for Chemical Analysis of Nickel-Copper Alloys.*

[1] AWS standards can be obtained from the American Welding Society, 550 N.W. LeJeune Road, Miami, FL 33126.

[2] ASTM standards can be obtained from the American Society for Testing and Materials, 100 Barr Harbor Drive, West Conshohocken, PA 19428-2959.

3. Classification

3.1 The welding filler metals covered by the A5.14/A5.14M-97 specification are classified using a system that is independent of U.S. Customary Units and the International System of Units (SI). Classification is according to the chemical composition of the filler metal, as specified in Table 1.

3.2 A filler metal classified under one classification shall not be classified under any other classification in this specification.

3.3 The filler metals classified under this specification are intended for use with the plasma arc, gas metal arc, gas tungsten arc, and submerged arc welding processes, but this is not to prohibit their use with any other process for which they are found suitable.

4. Acceptance

Acceptance[3] of the filler metal shall be in accordance with the provisions of ANSI/AWS A5.01, *Filler Metal Procurement Guidelines.*

5. Certification

By affixing the AWS Specification and Classification designations to the packaging, or the classification to the product, the manufacturer certifies that the product meets the requirements of this specification.[4]

[3] See Annex Section A3, Acceptance, for further information concerning acceptance and testing of the material shipped, and ANSI/AWS A5.01, *Filler Metal Procurement Guidelines.*

[4] See Annex Section A4, Certification, for further information concerning certification and the testing called for to meet this requirement.

TABLE 1
CHEMICAL COMPOSITION REQUIREMENTS FOR NICKEL AND NICKEL-ALLOY ELECTRODES & RODS

		Weight percent[a,b]																
AWS Classification[m]	UNS Number[c]	C	Mn	Fe	P	S	Si	Cu	Ni[d]	Co	Al	Ti	Cr	Nb (Cb) plus Ta	Mo	V	W	Other Elements, Total
ERNi-1[k]	N02061	0.15	1.0	1.0	0.03	0.015	0.75	0.25	93.0 min	—	1.5	2.0 to 3.5	—	—	—	—	—	0.50
ERNiCu-7[k]	N04060	0.15	4.0	2.5	0.02	0.015	1.25	Rem	62.0 to 69.0	—	1.25	1.5 to 3.0	—	—	—	—	—	0.50
ERNiCu-8[k]	N05504	0.25	1.5	2.0	0.03	0.015	1.00	Rem	63.0 to 70.0	—	2.0 to 4.0	0.25 to 1.00	—	—	—	—	—	0.50
ERNiCr-3[k,l]	N06082	0.10	2.5 to 3.5	3.0	0.03	0.015	0.50	0.50	67.0 min	e	—	0.75	18.0 to 22.0	2.0 to 3.0[f]	—	—	—	0.50
ERNiCr-4	N06072	0.01 to 0.10	0.20	0.50	0.02	0.015	0.20	0.50	Rem	—	—	0.3 to 1.0	42.0 to 46.0	—	—	—	—	0.50
ERNiCr-6[k]	N06076	0.08 to 0.15	1.00	2.00	0.03	0.015	0.30	0.50	75.0 min.	—	0.40	0.15 to 0.50	19.0 to 21.0	—	—	—	—	0.50
ERNiCrFe-5[k]	N06062	0.08	1.0	6.0 to 10.0	0.03	0.015	0.35	0.50	70.0 min	e	—	—	14.0 to 17.0	1.5 to 3.0[f]	—	—	—	0.50
ERNiCrFe-6[k]	N07092	0.08	2.0 to 2.7	8.0	0.03	0.015	0.35	0.50	67.0 min	—	—	2.5 to 3.5	14.0 to 17.0	—	—	—	—	0.50
ERNiCrFe-7[j]	N06052	0.04	1.0	7.0 to 11.0	0.02	0.015	0.50	0.30	Rem	—	1.10	1.0	28.0 to 31.5	0.10	0.50	—	—	0.50
ERNiCrFe-8[k]	N07069	0.08	1.0	5.0 to 9.0	0.03	0.015	0.50	0.50	70.0 min.	—	0.4 to 1.0	2.00 to 2.75	14.0 to 17.0	0.70 to 1.20	—	—	—	0.50
ERNiCrFe-11	N06601	0.10	1.0	Rem	0.03	0.015	0.50	1.0	58.0 to 63.0	—	1.0 to 1.7	—	21.0 to 25.0	—	—	—	—	0.50
ERNiFeCr-1[k]	N08065	0.05	1.0	22.0 min.	0.03	0.03	0.50	1.5 to 3.0	38.0 to 46.0	—	0.20	0.6 to 1.2	19.5 to 23.5	—	2.5 to 3.5	—	—	0.50
ERNiFeCr-2[g]	N07718	0.08	0.35	Rem	0.015	0.015	0.35	0.30	50.0 to 55.0	—	0.20 to 0.80	0.65 to 1.15	17.0 to 21.0	4.75 to 5.50	2.80 to 3.30	—	—	0.50
ERNiMo-1	N10001	0.08	1.0	4.0 to 7.0	0.025	0.03	1.0	0.50	Rem	2.5	—	—	1.0	—	26.0 to 30.0	0.20 to 0.40	1.0	0.50

(Continued)

TABLE 1 (CONT'D)
CHEMICAL COMPOSITION REQUIREMENTS FOR NICKEL AND NICKEL-ALLOY ELECTRODES & RODS

AWS Classification	UNS Number[c]	C	Mn	Fe	P	S	Si	Cu	Ni[d]	Co	Al	Ti	Cr	Nb (Cb) plus Ta	Mo	V	W	Other Elements, Total
ERNiMo-2	N10003	0.04 to 0.08	1.0	5.0	0.015	0.02	1.0	0.50	Rem	0.20	—	—	6.0 to 8.0	—	15.0 to 18.0	0.50	0.50	0.50
ERNiMo-3	N10004	0.12	1.0	4.0 to 7.0	0.04	0.03	1.0	0.50	Rem	2.5	—	—	4.0 to 6.0	—	23.0 to 26.0	0.60	1.0	0.50
ERNiMo-7	N10665	0.02	1.0	2.0	0.04	0.03	0.10	0.50	Rem	1.0	—	—	1.0	—	26.0 to 30.0	—	1.0	0.50
ERNiMo-8	N10008	0.10	1.0	10.0	0.015	0.015	0.50	0.50	60.0 min.	—	—	—	0.5 to 3.5	—	18.0 to 21.0	—	2.0 to 4.0	0.50
ERNiMo-9	N10009	0.10	1.0	5.0	0.015	0.015	0.50	0.3 to 1.3	65.0 min.	—	1.0	—	—	—	19.0 to 22.0	—	2.0 to 4.0	0.50
ERNiMo-10[n]	N10675	0.01	3.0	1.0 to 3.0	0.03	0.01	0.10	0.20	65.0 min.	3.0	0.50	0.20	1.0 to 3.0	0.20	27.0 to 32.0	0.20	3.0	0.50
ERNiCrMo-1	N06007	0.05	1.0 to 2.0	18.0 to 21.0	0.04	0.03	1.0	1.5 to 2.5	Rem	2.5	—	—	21.0 to 23.5	1.75 to 2.50	5.5 to 7.5	—	1.0	0.50
ERNiCrMo-2	N06002	0.05 to 0.15	1.0	17.0 to 20.0	0.04	0.03	1.0	0.50	Rem	0.50 to 2.5	—	—	20.5 to 23.0	—	8.0 to 10.0	—	0.20 to 1.0	0.50
ERNiCrMo-3[k]	N06625	0.10	0.50	5.0	0.02	0.015	0.50	0.50	58.0 min	—	0.40	0.40	20.0 to 23.0	3.15 to 4.15	8.0 to 10.0	—	—	0.50
ERNiCrMo-4	N10276	0.02	1.0	4.0 to 7.0	0.04	0.03	0.08	0.50	Rem	2.5	—	—	14.5 to 16.5	—	15.0 to 17.0	0.35	3.0 to 4.5	0.50
ERNiCrMo-7	N06455	0.015	1.0	3.0	0.04	0.03	0.08	0.50	Rem	2.0	—	0.70	14.0 to 18.0	—	14.0 to 18.0	—	0.50	0.50
ERNiCrMo-8	N06975	0.03	1.0	Rem	0.03	0.03	1.0	0.7 to 1.20	47.0 to 52.0	—	—	0.70 to 1.50	23.0 to 26.0	—	5.0 to 7.0	—	—	0.50
ERNiCrMo-9	N06985	0.015	1.0	18.0 to 21.0	0.04	0.03	1.0	1.5 to 2.5	Rem	5.0	—	—	21.0 to 23.5	0.50	6.0 to 8.0	—	1.5	0.50
ERNiCrMo-10	N06022	0.015	0.50	2.0 to 6.0	0.02	0.010	0.08	0.50	Rem	2.5	—	—	20.0 to 22.5	—	12.5 to 14.5	0.35	2.5 to 4.5	0.50

(Continued)

TABLE 1 (CONT'D)
CHEMICAL COMPOSITION REQUIREMENTS FOR NICKEL AND NICKEL-ALLOY ELECTRODES & RODS

AWS Classification	UNS Number[c]	C	Mn	Fe	P	S	Si	Cu	Ni[d]	Co	Al	Ti	Cr	Nb (Cb) plus Ta	Mo	V	W	Other Elements, Total
ERNiCrMo-11	N06030	0.03	1.5	13.0 to 17.0	0.04	0.02	0.80	1.0 to 2.4	Rem	5.0	—	—	28.0 to 31.5	0.30 to 1.50	4.0 to 6.0	—	1.5 to 4.0	0.50
ERNiCrMo-13	N06059	0.010	0.5	1.5	0.015	0.005	0.10	—	Rem	0.3	0.1 to 0.4	—	22.0 to 24.0	—	15.0 to 16.5	—	—	0.50
ERNiCrMo-14	N06686	0.01	1.0	5.0	0.02	0.02	0.08	0.5	Rem	—	0.5	0.25	19.0 to 23.0	—	15.0 to 17.0	—	3.0 to 4.4	0.50
ERNiCrMo-15	N07725	0.03	0.35	Rem	0.015	0.01	0.20	—	55.0 to 59.0	—	0.35	1.0 to 1.7	19.0 to 22.5	2.75 to 4.00	7.0 to 9.5	—	—	0.50
ERNiCrCoMo-1	N06617	0.05 to 0.15	1.0	3.0	0.03	0.015	1.0	0.50	Rem	10.0 to 15.0	0.8 to 1.5	0.60	20.0 to 24.0	—	8.0 to 10.0	—	—	0.50
ERNiCrWMo-1[h, i]	N06231	0.05 to 0.15	0.3 to 1.0	3.0	0.03	0.015	0.25 to 0.75	0.50	Rem	5.0	0.2 to 0.5	—	20.0 to 24.0	—	1.0 to 3.0	—	13.0 to 15.0	0.50

NOTES:
(a) The weld metal shall be analyzed for the specific elements for which values are shown in this table. If the presence of other elements is indicated in the course of this work, the amount of those elements shall be determined to ensure that their total does not exceed the limit specified for "Other Elements, Total" in the last column of the table.
(b) Single values are maximum, except where otherwise indicated. Rem = remainder.
(c) SAE/ASTM Unified Numbering System for Metals and Alloys.
(d) Includes incidental cobalt.
(e) Co is 0.12 maximum when specified by the purchaser.
(f) Mil-E-21562E type; Ta is 0.30 maximum.
(g) Boron is 0.006 maximum.
(h) Boron is 0.003 maximum.
(i) La is 0.050 maximum.
(j) Al + Ti is 1.5 maximum.
(k) Mil-E-21562E type; Pb <0.010. "Other Elements Total" shall include Pb, Sn, Zn.
(l) When EN82H or RH82H is specified, Carbon is 0.03 to 0.10.
(m) For strip, the classification designator "R" shall be replaced with "Q."
(n) Ni + Mo is 94.0 to 98.0; Ta is 0.02 max; Zr is 0.10 max.

6. Units of Measure and Rounding-Off Procedure

6.1 This specification makes use of both U.S. Customary Units and the International System of Units (SI). The measurements are not exact equivalents; therefore, each system must be used independently of the other without combining values in any way. The specification with designation A5.14-97 uses U.S. Customary Units. The specification with the designation A5.14M-98 uses SI Units. The latter are shown in appropriate columns in tables and in figures, and within brackets [] when used in text.

6.2 For the purpose of determining conformance with this specification, an observed or calculated value shall be rounded to the nearest unit in the last right-hand place of figures used in expressing the limiting value in accordance with the rounding-off method given in ASTM E29, *Standard Practice for Using Significant Digits in Tests to Determine Conformance with Specifications.*

PART B — TESTS, PROCEDURES, AND REQUIREMENTS

7. Summary of Tests

Chemical analysis of the filler metal, or the stock from which it was made, is the only test required for classification of a product under this specification.

8. Retest

If the results of any test fail to meet the requirement of that test, that test shall be repeated twice. The results of both retests shall meet the requirement. Material for retest may be taken from the original test sample or from a new sample. Retest need be only for those specific elements that failed to meet the test requirement.

If the results of one or both retests fail to meet the requirement, the material under test shall be considered as not meeting the requirements of this specification for that classification.

In the event that, during preparation or after completion of any test, it is clearly determined that prescribed or proper procedures were not followed in preparing test specimen(s) or in conducting the test, the test shall be considered invalid, without regard to whether the test was actually completed, or whether test results met, or failed to meet, the requirement. That test shall be repeated, following proper prescribed procedures. In this case, the requirement for doubling of the number of test specimens does not apply.

9. Chemical Analysis

9.1 A sample of the filler metal, or the stock from which it was made, shall be prepared for chemical analysis.

9.2 The sample shall be analyzed by accepted analytical methods. The referee method shall be either ASTM E38, *Standard Methods for Chemical Analysis of Nickel-Chromium and Nickel-Chromium-Iron Alloys,* or ASTM E76, *Standard Methods for Chemical Analysis of Nickel-Copper Alloys,* as appropriate.

9.3 The results of the analysis shall meet the requirements set forth in Table 1, for the classification of filler metal under test.

PART C — MANUFACTURE, IDENTIFICATION, AND PACKAGING

10. Method of Manufacture

The filler metals classified according to this specification may be made by any method that will produce material that meets the requirements of this specification.

11. Standard Sizes

11.1 Standard sizes for filler metal in the different package forms [straight lengths, coils with support, coils without support, and spools (see Section 13)] are shown in Table 2.

11.2 Standard sizes for strip electrodes in coils (see Section 13) are shown in Table 3.

12. Finish and Uniformity

12.1 All filler metal shall have a smooth finish that is free from slivers, depressions, scratches, scale, seams, laps, and foreign matter that would adversely affect the welding characteristics, the operation of the welding equipment, or the properties of the weld metal.

12.2 Each continuous length of filler metal shall be from a single heat of material, and welds, when present, shall have been made so as not to interfere with the uniform, uninterrupted feeding of the filler metal on automatic and semiautomatic equipment.

13. Standard Package Forms

13.1 Standard package forms are straight lengths, coils with support, coils without support, and spools. Standard package dimensions and weights for each

TABLE 2
STANDARD SIZES OF ELECTRODES AND RODS[a]

Standard Package Form	Diameter		Tolerance[b]	
	in.	mm	in.	mm
Straight lengths[c], coils with support and coils without support	1/16	1.6	±0.002	±0.01, −0.07
	3/32	2.4		
	—	2.5		
	1/8	3.2		
	5/32	4.0		
	3/16	4.8[d]		
	—	5.0		
	1/4	6.4[d]		
Spools	0.020	0.5	+0.001, −0.002	+0.01, −0.04
	0.030	0.8		
	0.035	0.9		
	0.045	1.14[d]		
	—	1.2		
	0.062(1/16)	1.6		

NOTES:
a. Dimensions, sizes, tolerances, and package forms other than those shown shall be as agreed by the purchaser and the supplier.
b. Out of roundness (the difference between the major and minor diameters) shall not exceed one-half of the tolerance.
c. Length shall be 36 in. +0, −1/2 in. [900 mm ±2%].
d. Metric sizes not shown in ISO 864.

TABLE 3
STANDARD SIZES OF STRIP ELECTRODES[a,b]

Width		Thickness	
in.	mm	in.	mm
1.18	30	0.020	0.5
2.36	60		
3.54	90		
4.72	120		

NOTES:
a. Other sizes shall be as agreed upon by the purchaser and supplier.
b. Strip electrodes shall not vary more than ±0.008 in. [±0.20 mm] in width and more than ±0.002 in. [±0.05 mm] in thickness.

form are given in Table 4. Package forms, sizes and weights other than these shall be as agreed between purchaser and supplier.

13.2 The liners in coils with support shall be designed and constructed to prevent distortion of the coil during normal handling and use and shall be clean and dry enough to maintain the cleanliness of the filler metal.

13.3 Spools shall be designed and constructed to prevent distortion of the filler metal during normal handling and use and shall be clean and dry enough to maintain the cleanliness of the filler metal (See Fig. 1).

14. Winding Requirements

14.1 Filler metal on spools and in coils shall be wound so that kinks, waves, sharp bends, overlapping, or wedging are not encountered, leaving the filler metal free to unwind without restriction. The outside end of the filler metal (the end with which welding is to begin) shall be identified so that it can be readily located and shall be fastened to avoid unwinding.

14.2 The cast and helix of filler metal in coils shall be such that the filler metal will feed in an uninterrupted manner on automatic and semiautomatic equipment.

14.3 The cast and helix of filler metal on 4-in. [100-mm] spools shall be such that a specimen long enough to produce a single loop, when cut from the spool and laid unrestrained on a flat surface, will do the following:

(a) form a circle not less than 2.5 in. [60 mm] nor more than 15 in. [380 mm] in diameter, and

(b) rise above the flat surface no more than 1/2 in. [13 mm] at any location.

14.4 The cast and helix of filler metal on 8-in. [200-mm] spools shall be such that a specimen long enough to produce a single loop, when cut from the spool and laid unrestrained on a flat surface, will do the following:

(a) form a circle not less than 10 in. [250 mm] nor more than 35 in. [890 mm] in diameter, and

(b) rise above the flat surface no more than 3/4 in. [19 mm] at any location.

14.5 The cast and helix of filler metal on 12-in. [300-mm] spools shall be such that a specimen long enough to produce a single loop, when cut from the spool and laid unrestrained on a flat surface, will do the following:

(a) form a circle not less than 15 in. [380 mm] nor more than 50 in. [1300 mm] in diameter, and

(b) rise above the flat surface no more than 1 in. [25 mm] at any location.

15. Filler Metal Identification

15.1 The product information and the precautionary information required in Section 17 for marking each package shall also appear on each coil and spool.

15.2 Coils without support shall have a tag containing this information securely attached to the filler metal at the inside end of the coil.

15.3 Coils with support shall have the information securely affixed in a prominent location on the support.

TABLE 4
STANDARD PACKAGE DIMENSIONS AND WEIGHTS[a]

Electrode Size,[b]		Net Weight[c]		Width		Diameter[h], Inside		Outside, max	
in.	mm	lb	kg	in.	mm	in.	mm	in.	mm
Bare Wire, Rods									
				Straight Lengths					
1/16–1/4	1.6–6.4	5	2.2	—	—	—	—	—	—
		10	4.5	—	—	—	—	—	—
		25	11	—	—	—	—	—	—
				Coils With Support					
1/16–1/4	1.6–6.4	25	11	2.5	65	12	305	17.5	445
		50	23						
1/16–1/4	1.6–6.4	60	27	4.6	120	12	305	17	430
1/16–1/4	1.6–6.4	100	45	5	125	Not Specified[d]		31.5	800
		150	68						
		200	91						
				Coils Without Support					
1/16–1/4	1.6–6.4	----------as agreed by the purchaser and the supplier----------							
				Spools[e]					
0.020–0.062 (0.5–1.6)		2	0.9[f]					4	102
		10	4.5[f]					8	203
		25	11.0[g]					12	305

Strip Electrodes					
Strip Width		Net Weight[c]		Diameter[h] Inside	
in.	mm	lb	kg	in.	mm
1.18	30	60	30	12	300
2.36	60	60	30		
3.54	90	120	55		
4.72	120	120	55		

NOTES:
a. Sizes, weights, and dimensions other than those listed above shall be as agreed upon by purchaser and supplier.
b. The range is inclusive as shown in Table 2.
c. New weights shall not vary more than ±10 percent.
d. The inside diameter of the liner shall be as agreed by the purchaser and the supplier.
e. The dimensions of standard spools are specified in Figure 1.
f. Tolerance is ±20 percent
g. Tolerance is ±20 percent except that 20 percent of any lot may contain spools that vary in net weight from 5.7 to 9.1 kg.
h. Tolerance is ±1/8 in. [±3 mm].

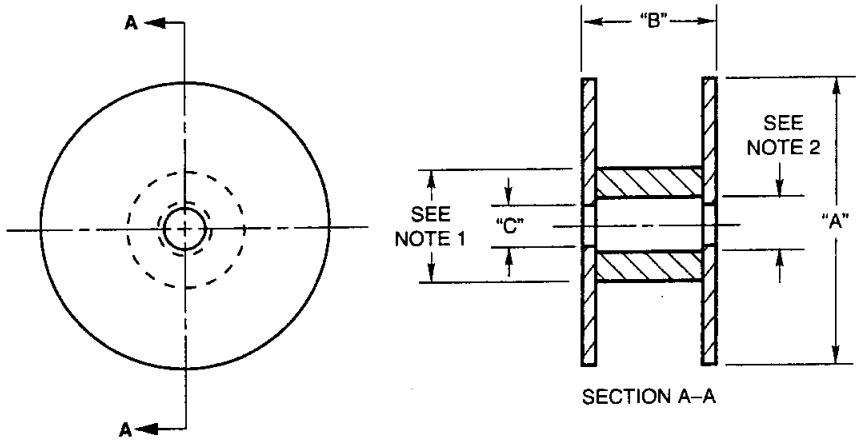

DIMENSIONS OF STANDARD 4 in. (100 mm) SPOOL

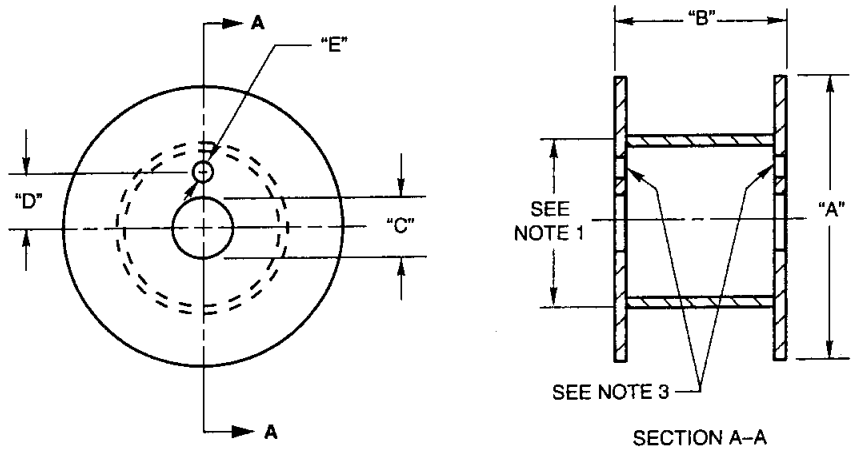

DIMENSIONS OF STANDARD 8 AND 12 in. (200 AND 300 mm) SPOOLS

	"A" Diameter, maximum[4]		"B" Width		"C" Diameter		"D" Distance Between Axes		"E" Diameter[3]	
Spool Size	in.	mm	in.	mm	in.	mm	in.	mm	in.	mm
4 in. [100 mm]	4	102	1.75	46	0.63	16	—	—	—	—
Tolerance	—	—	±0.03	+0, –2	+0.01, –0	+1, –0				
8 in. [200 mm]	8	203	2.16	56	2.03	50.5	1.75	44.5	0.44	10
Tolerance	—	—	±0.03	+0, –3	+0.06, –0	+2.5, –0	±0.02	±0.5	+0, –0.06	+1, –0
12 in. [300 mm]	12	305	4.0	103	2.03	50.5	1.75	44.5	0.44	10
Tolerance	—	—	±0.06	+0, –3	+0.06, –0	+2.5, –0	±0.02	±0.5	+0, –0.06	+1, –0

NOTES:
(1) Outside diameter of barrel shall be such as to permit proper feeding of the filler metals.
(2) Inside diameter of the barrel shall be such that swelling of the barrel or misalignment of the barrel and flanges will not result in the core of the spool being less than the inside diameter of the flange (dimension "C").
(3) Holes are provided on each flange, but they need not be aligned.
(4) Metric dimensions and tolerances conform to ISO 864 except that "A" specifies ± tolerances on the nominal diameter, rather than a plus tolerance only, which is shown here as a maximum.

FIG. 1 DIMENSIONS OF STANDARD SPOOLS

15.4 Spools shall have the information securely affixed in a prominent location on the outside of at least one flange of the spool.

16. Packaging

Filler metal shall be suitably packaged to ensure against damage during shipment and storage under normal conditions.

17. Marking of Packages

17.1 The following product information (as a minimum) shall be legibly marked so as to be visible from the outside of each unit package:

(a) AWS specification and classification designation (year of issue may be excluded)

(b) Supplier's name and trade designation

(c) Size and net weight

(d) Lot, control, or heat number

17.2 The following precautionary information, or its equivalent (as a minimum), shall be prominently displayed in legible print on all packages of filler metal, including individual unit packages enclosed within a larger package.

WARNING:

PROTECT yourself and others. Read and understand this information.

FUMES and GASES can be hazardous to your health.

ARC RAYS can injure eyes and burn skin.

ELECTRIC SHOCK can KILL.

- Before use, read and understand the manufacturer's instructions, Material Safety Data Sheets (MSDSs), and your employer's safety practices.
- Keep your head out of the fumes.
- Use enough ventilation, exhaust at the arc, or both, to keep fumes and gases away from your breathing zone and the general area.
- Wear correct eye, ear, and body protection.
- Do not touch live electrical parts.
- See American National Standard ANSI/ASC Z49.1, *Safety in Welding, Cutting, and Allied Processes*, published by the American Welding Society, 550 N.W. LeJeune Road, Miami, FL 33126; and OSHA Safety and Health Standards, *29 CFR 1910*, available from the U.S. Government Printing Office, Washington, DC 20402.

DO NOT REMOVE THIS INFORMATION

Annex
Guide to AWS Specification for Nickel and Nickel-Alloy Bare Welding Electrodes and Rods

(This Annex is not a part of ANSI/AWS A5.14/A5.14M-97, *Specification for Nickel and Nickel-Alloy Bare Welding Electrodes and Rods,* but is included for information purposes only.)

A1. Introduction

The purpose of this guide is to correlate the nickel and nickel-alloy bare welding electrodes and rods classifications with their intended applications so they can be used effectively. Reference to appropriate base-metal specifications is made whenever that can be done and when it would be helpful. Such references are intended only as examples rather than a complete listing of the materials for which each filler metal is suitable.

A2. Classification System

A2.1 The system for classifying the filler metals in this specification follows the standard pattern used in other AWS filler metal specifications. The letters "ER" at the beginning of each classification designation stand for electrode and rod, indicating that the filler metal may be used either way. The substitution of the letter "EQ" for "ER" at the beginning of a classification indicates that the product is being supplied as strip electrode (see Table 1, Note m).

A2.2 Since the filler metals are classified according to their chemical composition, the chemical symbol "Ni"appears immediately after the "ER" (or "EQ") as a means of identifying the filler metal as a nickel-base alloy. The other symbols (Cr, Co, Cu, Fe, Mo, and W) in the designations are intended to group the filler metals according to their principal alloying elements. The individual designations are made up of these symbols plus a number at the end of the designation (ERNiMo-1 or ERNiMo-2, for example). These numbers separate one composition from another within a group and are not repeated within that group.

A2.3 From an application point of view, most of the filler metal classifications in this specification have a corresponding classification in ANSI/AWS A5.11/A5.11M, *Specification for Nickel and Nickel-Alloy Covered Welding Electrodes.* For those cases in which there is a corresponding application for a bare electrode or rod "ER" and a covered electrode "E," Table A1 correlates the "ER" classification in this edition with those in the previous edition of this specification and with the corresponding covered electrode "E" classification in ANSI/AWS A5.11/A5.11M. It also lists the current designation for each classification as it is given in Military Specification MIL-E-21562E, when such a designation exists.

An international system for designating welding filler metals is under development by the International Institute of Welding (IIW) for use in future specifications to be issued by the International Standards Organization (ISO). Table A1 shows the proposed designations for nickel-alloy filler metals. In that system, the initial "S"designates a solid wire or rod, the letter "N" the alloy system, followed by a four-digit number. For nickel alloys, the four-digit number is based upon the UNS number (see Table 1), one of the five digits of which has been eliminated.

A3. Acceptance

Acceptance of all welding materials classified under this specification is in accordance with ANSI/AWS A5.01, as the specification states. Any testing a purchaser requires of the supplier, for material shipped in accordance with this specification, shall be clearly stated in the purchase order, according to the provisions of ANSI/AWS A5.01. In the absence of any such statement

TABLE A1
COMPARISON OF CLASSIFICATIONS

Present Classification	UNS Number	Military Designation[a]	Corresponding Classification in A5.11/A5.11M	Proposed ISO Designation[b]
ERNi-1	N02061	EN61 & RN61	ENi-1	SN2061
ERNiCu-7	N04060	EN60 & RN60	ENiCu-7	SN4060
ERNiCu-8[c]	N05504	EN64 & RN64	—	—
ERNiCr-3	N06082	EN82 & RN82 EN82H & RN82H	ENiCrFe-3	SN6082
ERNiCr-4[c]	N06072	—	—	—
ERNiCr-6[c]	N06076	EN6N & RN6N	—	—
ERNiCrFe-5	N06062	EN62 & RN62	ENiCrFe-1	SN6062
ERNiCrFe-6	N07092	EN6A & RN6A	ENiCrFe-2	SN6092
ERNiCrFe-7[c]	N06052	—	ENiCrFe-7	SN6052
ERNiCrFe-8[c]	N07069	RN69	—	—
ERNiCrFe-10[c]	N06601	—	—	SN6601
ERNiFeCr-1	N08065	RN65	—	SN8065
ERNiFeCr-2	N07718	—	—	SN7718
ERNiMo-1	N10001	—	ENiMo-1	—
ERNiMo-2	N10003	—	—	—
ERNiMo-3	N10004	—	ENiMo-3	—
ERNiMo-7	N10665	—	ENiMo-7	SN1066
ERNiMo-8[c]	N10008	—	ENiMo-8	—
ERNiMo-9[c]	N10009	—	ENiMo-9	—
ERNiMo-10[c]	N10675	—	ENiMo-10	—
ERNiCrMo-1	N06007	—	ENiCrMo-1	—
ERNiCrMo-2	N06002	—	ENiCrMo-2	SN6002
ERNiCrMo-3	N06625	EN625 & RN625	ENiCrMo-3	SN6625
ERNiCrMo-4	N10276	—	ENiCrMo-4	SN6276
ERNiCrMo-7	N06455	—	ENiCrMo-7	SN6455
ERNiCrMo-8	N06975	—	—	—
ERNiCrMo-9	N06985	—	ENiCrMo-9	SN6985
ERNiCrMo-10	N06022	—	ENiCrMo-10	SN6022
ERNiCrMo-11	N06030	—	ENiCrMo-11	SN6030
ERNiCrMo-13[c]	N06059	—	ENiCrMo-13	SN6059
ERNiCrMo-14[c]	N06686	—	ENiCrMo-14	SN6686
ERNiCrMo-15[c]	N07725	—	—	—
ERNiCrCoMo-1	N06617	—	ENiCrCoMo-1	—
ERNiCrWMo-1[c]	N06231	—	—	—

NOTES:
a. MIL E-21562E
b. IIW Doc XII-1466-96
c. New classification

in the purchase order, the supplier may ship the material with whatever testing is normally conducted on material of that classification, as specified in Schedule F, Table 1, of ANSI/AWS A5.01. Testing in accordance with any other Schedule in that Table must be specifically required by the purchase order. In such cases, acceptance of the material shipped will be in accordance with those requirements.

A4. Certification

The act of placing the AWS specification and classification designations on the packaging enclosing the product, or the classification on the product itself, constitutes the supplier's (manufacturer's) certification that the product meets all of the requirements of the specification.

The only testing requirement implicit in this certification is that the manufacturer has actually conducted the tests required by the specification on material that is representative of that being shipped and that the material met the requirements of the specification. Representative material, in this case, is any production run of that classification using the same formulation. "Certification" is not to be construed to mean that tests of any kind were necessarily conducted on samples

of the specific material shipped. Tests on such material may or may not have been made. The basis for the certification required by the specification is the classification tests of "representative material" cited above, and the "Manufacturer's Quality Assurance System" in ANSI/AWS A5.01.

A5. Ventilation During Welding

A5.1 Five major factors that govern the quantity of fumes in the atmosphere to which welders and welding operators are exposed during welding are listed below:

(a) Dimensions of the space in which welding is done (with special regard to the height of the ceiling), and

(b) Number of welders and welding operators working in the space, and

(c) Rate of evolution of fumes, gases, or dust, according to the materials and processes involved, and

(d) The proximity of the welder or welding operator to the fumes as they issue from the welding zone and to the gases and dust in the space in which the welder is working, and

(e) The ventilation provided to the space in which the welding is done.

A5.2 American National Standard ANSI/ASC Z49.1, *Safety in Welding, Cutting, and Allied Processes* (published by the American Welding Society), discusses the ventilation that is required during welding and should be referred to for details. Attention is drawn particularly to the section of that document dealing with ventilation.

A6. Welding Considerations

A6.1 The filler metals in this specification can be used with any of a variety of welding processes. Most notable among them are gas tungsten arc welding (GTAW), gas metal arc welding (GMAW), submerged arc welding (SAW), and plasma arc welding (PAW). SAW and PAW are quite specialized, and the supplier of the filler metals should be consulted for recommendations concerning their use. General suggestions are given below for the other two processes.

A6.2 Before welding or heating any nickel-base alloy, the base metal must be clean. Oil, grease, paint, lubricants, marking pencils, temperature indicating materials, threading compounds and other such materials frequently contain sulfur or lead that may cause cracking (embrittlement) of the base metal or the weld metal if present during welding or heating.

A6.3 For GTAW, direct current-electrode negative (dcen) is used. High-purity grades of either argon or helium (or a combination of the two) are used as a shielding gas.

A6.4 For GMAW, direct current-electrode positive (dcep) is employed. Argon shielding gas is often used, but mixtures of argon and helium are also commonly used.

A7. Description and Intended Use of Electrodes and Rods

A7.1 ERNi-X Classification (ERNi-1). The nominal composition (wt.-%) of weld metal of this classification is 96 Ni, 3 Ti. Filler metal of this classification is intended for welding wrought and cast forms of commercially pure nickel alloy (ASTM B160, B161, B162, and B163 having UNS numbers N02200 or N02201) to itself using the GTAW, GMAW SAW, and PAW processes. The filler metal contains sufficient titanium to control weld-metal porosity with these welding processes.

A7.2 ERNiCu-X Classifications

A7.2.1 ERNiCu-7 Classification. The nominal composition (wt.-%) of weld metal of this classification is 65 Ni, 30 Cu, 3 Mn, 2 Ti. Filler metal of this classification is used for welding nickel-copper alloy (ASTM B127, B163, B164, and B165 having UNS number N04400) to itself using the GTAW, GMAW, SAW, and PAW processes. The filler metal contains sufficient titanium to control porosity with these welding processes.

A7.2.2 ERNiCu-8 Classification. The nominal composition (wt.-%) of weld metal of this classification is 66 Ni, 29 Cu, 3 Al, 1 Fe, 0.5 Ti. Filler metal of this classification is used for welding age-hardening nickel-copper alloy (ASTM F467 and F468 having UNS number N05500) to itself using the GTAW, GMAW, SAW, and PAW processes. The filler metal will age harden on heat treatment. For specific information concerning age hardening, consult the supplier or the supplier's technical literature.

A7.3 ERNiCr-X Classifications

A7.3.1 ERNiCr-3. The nominal composition (wt.-%) of weld metal of this classification is 72 Ni, 20 Cr, 3 Mn, 2.5 Nb plus Ta. Filler metal of this classification is used for welding nickel-chromium-iron alloy (ASTM B163, B166, B167, and B168 having UNS number N06600) to itself, for the clad side of joints in steel clad with nickel-chromium-iron alloy, for surfacing steel

with nickel-chromium-iron weld metal, for dissimilar welding of nickel-base alloys, and for joining steel to nickel-base alloys using the GTAW, GMAW, SAW, and PAW processes.

A7.3.2 ERNiCr-4. The nominal composition (wt.-%) of weld metal of this classification is 55 Ni, 44 Cr. Filler metal of this classification is used for GTAW of 50/50 nickel/chromium alloy, cladding nickel/chromium alloy onto nickel-iron-chromium tubing, and casting repair. The filler metal is resistant to high-temperature corrosion, including fuel-ash corrosion in atmospheres containing sulfur and vanadium.

A7.3.3 ERNiCr-6. The nominal composition (wt.-%) of weld metal of this classification is 78 Ni, 20 Cr, 1 Fe, 0.4 Ti. Filler metal of this classification is used for welding nickel-chromium-iron alloy (ASTM B163, B166, B167, and B168 having UNS number N06600) to itself, for the clad side of joints in steel clad with nickel-chromium-iron alloy, for surfacing steel with nickel-chromium-iron weld metal, and for joining steel to nickel-base alloys using the GTAW, GMAW, SAW, and PAW processes.

A7.4 ERNiCrFe-X Classifications

A7.4.1 ERNiCrFe-5. The nominal composition (wt.-%) of weld metal of this classification is 74 Ni, 16 Cr, 8 Fe, 2 Nb plus Ta. Filler metal of this classification is used for welding nickel-chromium-iron alloy (ASTM B163, B166, B167, and B168 having UNS number N06600) to itself using the GTAW, GMAW, SAW, and PAW processes. The higher niobium content of the filler metal is intended to minimize cracking where high welding stresses are encountered, as in thick-section base metal.

A7.4.2 ERNiCrFe-6. The nominal composition (wt.-%) of weld metal of this classification is 71 Ni, 16 Cr, 6 Fe, 3 Ti, 2.5 Mn. Filler metal of this classification is used for cladding steel with nickel-chromium-iron weld metal and for joining steel to nickel-base alloys using the GTAW, GMAW, SAW, and PAW processes. The weld metal will age harden on heat treatment. For specific information concerning age hardening, consult the supplier or the supplier's technical literature.

A7.4.3 ERNiCrFe-7. The nominal composition (wt.-%) of weld metal of this classification is 60 Ni, 29 Cr, 9 Fe. Filler metal of this classification is used for welding nickel-chromium-iron alloy (ASTM B163, B166, B167, and B168 having UNS number N06690) to itself, to steels, to overlay on steels, and to weld steels clad with the nickel-chromium-iron alloys using the GTAW, GMAW, SAW, and PAW processes.

A7.4.4 ERNiCrFe-8. The nominal composition (wt.-%) of weld metal of this classification is 73 Ni, 15.5 Cr, 7 Fe, 2.4 Ti, 1 Nb, 0.7 Al. Filler metal of this classification is used for cladding steel with nickel-chromium-iron weld metal and for joining steel to nickel-base alloys using the GTAW, GMAW, SAW, and PAW processes. The weld metal will age harden on heat treatment. For specific information concerning age hardening, consult the supplier or the supplier's technical literature.

A7.4.5 ERNiCrFe-11. The nominal composition (wt.-%) of weld metal of this classification is 61 Ni, 23 Cr, 14 Fe, 1.4 Al. Filler metal of this classification is used for welding nickel-chromium-iron-aluminum alloy (ASTM B166, B167, and B168 having UNS number N06601) to itself and to other high-temperature compositions using the GTAW process. It is used for severe applications where the exposure temperature can exceed 2100°F [1150°C].

A7.5 ERNiFeCr-X Classifications

A7.5.1 ERNiFeCr-1. The nominal composition (wt.-%) of weld metal of this classification is 42 Ni, 30 Fe, 21 Cr, 3 Mo, 2 Cu. Filler metal of this classification is used for welding the nickel-iron-chromium-molybdenum-copper alloy (ASTM B423 having UNS number N08825) to itself using the GTAW and GMAW processes.

A7.5.2 ERNiFeCr-2. The nominal composition (wt.-%) of weld metal of this classification is 52 Ni, 18 Fe, 19 Cr, 5 Nb plus Ta, 3 Mo, 1 Ti. Filler metal of this classification is used for welding nickel-chromium-niobium-molybdenum alloy (ASTM B637 and AMS 5589 having UNS number N07718) to itself using the GTAW process. The weld metal will age harden on heat treatment. For specific information concerning age hardening, consult the supplier or the supplier's technical literature.

A7.6 ERNiMo-X Classifications

A7.6.1 ERNiMo-1. The nominal composition (wt.-%) of weld metal of this classification is 66 Ni, 28 Mo, 5.5 Fe. Filler metal of this classification is used for welding nickel-molybdenum alloy (ASTM B333 having UNS number N10001) to itself using the GTAW and GMAW processes.

A7.6.2 ERNiMo-2. The nominal composition (wt.-%) of weld metal of this classification is 71 Ni, 16 Mo, 7 Cr, 3 Fe. Filler metal of this classification is

used for welding nickel-molybdenum alloy (ASTM B366, B434, and B573 having UNS number N10003) to itself, to steel, to other nickel-base alloys, and for cladding steel with nickel-molybdenum weld metal using the GTAW and GMAW processes.

A7.6.3 ERNiMo-3. The nominal composition (wt.-%) of weld metal of this classification is 63 Ni, 24 Mo, 6 Fe, 5 Cr. Filler metal of this classification is used for weld repair of various nickel-, cobalt-, and iron-base alloys and for dissimilar joining applications of nickel-, cobalt-, and iron-base alloys.

A7.6.4 ERNiMo-7. The nominal composition (wt.-%) of weld metal of this classification is 69 Ni, 28 Mo. Filler metal of this classification is used for welding nickel-molybdenum alloy (ASTM B333 and B335 having UNS number N10665) to itself and for cladding steel with nickel-molybdenum weld metal using the GTAW and GMAW processes.

A7.6.5 ERNiMo-8. The nominal composition (wt.-%) of filler metal of this classification is 70 Ni, 19 Mo, 5 Fe, 3 W, 2 Cr. Filler metal of this classification is used for welding 9% nickel steel (ASTM A333, A334, A353, and A553 having UNS number K81340) to itself using the GTAW and SAW processes.

A7.6.6 ERNiMo-9. The nominal composition (wt.-%) of filler metal of this classification is 70 Ni, 20 Mo, 1 Fe, 3 W. Filler metal of this classification is used for welding 9% nickel steel (ASTM A333, A334, A353, and A553 having UNS number K81340) to itself using the GTAW and SAW processes.

A7.6.7 ERNiMo-10. The nominal composition (wt.-%) of weld metal of this classification is 68 Ni, 28.5 Mo, 1.5 Cr, 1.5 Fe and low carbon. Filler metal of this classification is used for welding nickel-molybdenum alloy (ASTM B333, B335, B366, B564, B619, B622, and B626 having UNS number N10675) to itself, for welding the clad side of joints in steel clad with nickel-molybdenum alloy and for welding nickel-molybdenum alloys to steel and to other nickel-base alloys using the GTAW, GMAW, and PAW processes.

A7.7 ERNiCrMo-X Classifications

A7.7.1 ERNiCrMo-1. The nominal composition (wt.-%) of weld metal of this classification is 44 Ni, 22 Cr, 20 Fe, 6.5 Mo, 2 Nb plus Ta, 2 Cu, 1.5 Mn. Filler metal of this classification is used for welding nickel-chromium-molybdenum alloy (ASTM B581 and B582 having UNS number N06007) to itself, to steel, to other nickel-base alloys, and for cladding steel with nickel-chromium-molybdenum weld metal using the GTAW, GMAW, and PAW processes.

A7.7.2 ERNiCrMo-2. The nominal composition (wt.-%) of weld metal of this classification is 47 Ni, 22 Cr, 18 Fe, 9 Mo, 1.5 Co. Filler metal of this classification is used for welding nickel-chromium-molybdenum alloy (ASTM B366, B435, and B572 having UNS number N06002) to itself, to steel, to other nickel-base alloys, and for cladding steel with nickel-chromium-molybdenum weld metal using the GTAW, GMAW, and PAW processes.

A7.7.3 ERNiCrMo-3. The nominal composition (wt.-%) of weld metal of this classification is 61 Ni, 22 Cr, 9 Mo, 3.5 Nb plus Ta. Filler metal of this classification is used for welding nickel-chromium-molybdenum alloy (ASTM B443, B444, and B446 having UNS number N06625) to itself, to steel, to other nickel-base alloys, for cladding steel with nickel-chromium-molybdenum weld metal, and for welding the clad side of joints in steel with nickel-chromium-molybdenum alloy using the GTAW, GMAW, SAW, and PAW processes. This filler metal is recommended for applications where the operating temperature ranges from cryogenic to 1000°F [540°C].

A7.7.4 ERNiCrMo-4. The nominal composition (wt.-%) of weld metal of this classification is 57 Ni, 16 Cr, 15.5 Mo, 5.5 Fe, 4 W. Filler metal of this classification is used for welding nickel-chromium-molybdenum alloy (ASTM B574, B575, B619, B622, and B628 having UNS number N10276) to itself, to steel, to other nickel-base alloys, and for cladding steel with nickel-chromium-molybdenum weld metal using the GTAW and GMAW processes.

A7.7.5 ERNiCrMo-7. The nominal composition (wt.-%) of weld metal of this classification is 65 Ni, 16 Cr, 15.5 Mo, 2 Fe. Filler metal of this classification is used for welding nickel-chromium-molybdenum alloy (ASTM B574, B575, B619, B622, and B628 having UNS number N06455) to itself, to steel, to other nickel-base alloys, and for cladding steel with nickel-chromium-molybdenum weld metal using the GTAW, GMAW, and PAW processes.

A7.7.6 ERNiCrMo-8. The nominal composition (wt.-%) of weld metal of this classification is 50 Ni, 25 Cr, 17 Fe, 6 Mo, 1 Cu. Filler metal of this classification is used for welding nickel-chromium-molybdenum alloy (ASTM B581, B582, B619, B622 and B626 having UNS number N06975) to itself, to steel, to other nickel-base alloys, and for cladding steel

with nickel-chromium-molybdenum weld metal using the GTAW, GMAW, and PAW processes.

A7.7.7 ERNiCrMo-9. The nominal composition (wt.-%) of weld metal of this classification is 44 Ni, 22 Cr, 20 Fe, 7 Mo, 2 Co, 2 Cu. Filler metal of this classification is used for welding nickel-chromium-molybdenum alloy (ASTM B581, B582, B619, B622, and B626 having UNS number N06007 or N06985) to itself, to steel, to other nickel-base alloys, and for cladding steel with nickel-chromium-molybdenum weld metal using the GTAW, GMAW, and PAW processes.

A7.7.8 ERNiCrMo-10. The nominal composition (wt.-%) of weld metal of this classification is 56 Ni, 22 Cr, 13 Mo, 4 Fe, 3 W. Filler metal of this classification is used for welding nickel-chromium-molybdenum alloy (ASTM B574, B575, B619, B622 and B628 having UNS number N06022) to itself, to steel, to other nickel-base alloys, and for cladding steel with nickel-chromium-molybdenum weld metal using the gas tungsten arc, gas metal arc, and plasma arc welding processes.

A7.7.9 ERNiCrMo-11. The nominal composition (wt.-%) of weld metal of this classification is 43 Ni, 30 Cr, 15 Fe, 5 Mo, 2 Co, 3 W, 2 Cu. Filler metal of this classification is used for welding nickel-chromium-molybdenum alloy (ASTM B581, B582, B619, B622, and B626 having UNS number N06030) to itself, to steel, to other nickel-base alloys, and for cladding steel with nickel-chromium-molybdenum weld metal using the GTAW, GMAW, and PAW processes.

A7.7.10 ERNiCrMo-13. The nominal composition (wt.-%) of weld metal of this classification is 59 Ni, 23 Cr, 16 Mo, 1 Fe, low carbon. Filler metal of this classification is used for welding nickel-chromium-molybdenum alloy (B564, B574, B575, B619, B622, and B626 having UNS number N06059) to itself, to steel, to other nickel-base alloys, and for cladding steel using the GTAW, GMAW, SAW, and PAW processes.

A7.7.11 ERNiCrMo-14. The nominal composition (wt.-%) of the weld metal of this classification is 57 Ni, 21 Cr, 16 Mo, 4 W. Filler metal of this classification is used for welding nickel-chromium-molybdenum alloy (ASTM B574, B575, B619, B622, and B628 having UNS number N06686) to itself, to steel, to other nickel-base alloys, and for cladding steel using the GTAW, GMAW, and SAW processes.

A7.7.12 ERNiCrMo-15. The nominal composition (wt.-%) of weld metal of this classification is 57 Ni, 21 Cr, 8 Mo, 7 Fe, 3 Nb plus Ta, 1.4 Ti. Filler metal of this classification is used for welding nickel-chromium-molybdenum alloy (ASTM B805, UNS number N07725) to itself, and for cladding steel using the GMAW and GTAW processes. The weld metal age hardens on heat treatment. For specific information concerning age hardening, consult the supplier or the supplier's technical literature.

A7.8 ERNiCrCoMo-X Classification (ERNiCrCoMo-1). The nominal composition (wt.-%) of weld metal of this classification is 53 Ni, 23 Cr, 12 Co, 9 Mo, 1 Fe. Filler metal of this classification is used for welding nickel-chromium-cobalt-molybdenum alloy (UNS N06617) to itself using the GTAW and GMAW processes.

A7.9 ERNiCrWMo-X Classification (ERNiCrWMo-1). The nominal composition (wt.-%) of weld metal of this classification is 57 Ni, 22 Cr, 14 W, 2 Co, 2 Fe, 2 Mo. Filler metal of this classification is used for welding nickel-chromium-tungsten-molybdenum-lanthanum alloy (ASTM B366, B435, B564, and B572 having UNS number N06230) to itself using the GTAW and GMAW processes.

A8. Special Tests

It is recognized that supplementary tests may be required for certain applications. In such cases, tests to determine specific properties such as corrosion resistance, scaling resistance, or strength at elevated or cryogenic temperatures may be required. ANSI/AWS A5.01 contains provisions for ordering such tests. This section is included to give guidance to those who desire to specify such special tests. Those tests shall be conducted as agreed upon between supplier and purchaser.

A8.1 Corrosion or Scaling Tests. Although welds made with electrodes and rods classified in this specification are commonly used in corrosion and heat-resisting applications, tests for those properties are not included in the specification. When required for a particular application, testing can be conducted on specimens taken from either a weld pad or a welded joint.

A8.1.1 Specimens from a joint are suitable for qualifying the welding procedure (for a specific application involving corrosion or oxidation resistance) but not for qualifying the filler metal. Tests on specimens from a joint have the disadvantage of being a combined test of the properties of the weld metal, the heat-affected zone, and the unaffected base metal. With such specimens, it is more difficult to obtain reproducible data (when a difference exists in the properties of the metal in the various parts of the specimen). Specimens taken

from a joint do have the advantage of being able to duplicate the joint design and the welding sequence planned for fabrication.

A8.1.2 Specimens for testing corrosion or oxidation resistance of the weld metal alone are prepared by following the procedure normally used for the preparation of pads for chemical analysis (see 9.3 in ANSI/AWS A5.11/A5.11M). The pad size should be at least ¾ in. [19 mm] in height by 2-½ in. [65 mm] in width by (1 + 0.625 *n*) in. [25 + 16 *n* mm] where *n* represents the number of specimens required from the pad. Specimens measuring ½ by 2 by ¼ in. [13 by 50 by 6.5 mm] are machined from the top of the pad, in a manner such that the 2 in. [50 mm] dimension of the specimen is parallel to the 2-½ in. [65 mm] dimension of the pad and the ½ in. [13 mm] dimension is parallel with the length of the pad. The heat treatment, surface finish, and marking of the specimens prior to testing should be in accordance with standard practices for tests of similar alloys in the wrought or cast forms. The testing procedures should correspond to ASTM G4, *Recommended Practice for Conducting Plant Corrosion Tests.*

A8.2 Test for Mechanical Properties. The filler metals in this specification are used with a variety of welding processes and procedures. For this reason, weld metal tests have not been included in the specification. The tensile properties, bend ductility, and soundness of welds produced with these filler metals are determined during qualification of the procedure.

Variables in the procedure (current, voltage, and welding speed), in the shielding medium (the specific gas mixture or the flux), in the manual dexterity of the welder, and in the composition of the base metal and the filler metal all influence the results that can be obtained. Typical tensile values for weld metals are shown in Table A2. When supplementary tests for mechanical properties are specified, the testing procedures should be in accordance with ANSI/AWS B4.0, *Standard Methods for Mechanical Testing of Welds.*

TABLE A2
TYPICAL WELD METAL TENSILE STRENGTHS[a]

AWS Classification	Tensile Strength (typical) ksi	MPa
ERNi-1	55	380
ERNiCu-7	70	480
ERNiCu-8	100[b]	690[b]
ERNiCr-3	80	550
ERNiCr-4	100	690
ERNiCr-6	80	550
ERNiCrFe-5	80	550
ERNiCrFe-6	80	550
ERNiCrFe-7	80	550
ERNiCrFe-8	125[c]	860[c]
ERNiCrFe-11	94	650
ERNiFeCr-1	80	550
ERNiFeCr-2	165[d]	1140[d]
ERNiMo-1	100	690
ERNiMo-2	100	690
ERNiMo-3	100	690
ERNiMo-7	110	760
ERNiMo-8	95	660
ERNiMo-9	95	660
ERNiMo-10	110	760
ERNiCrMo-1	85	590
ERNiCrMo-2	95	660
ERNiCrMo-3	110	760
ERNiCrMo-4	100	690
ERNiCrMo-7	100	690
ERNiCrMo-8	85	590
ERNiCrMo-9	85	590
ERNiCrMo-10	100	690
ERNiCrMo-11	85	590
ERNiCrMo-13	110	760
ERNiCrMo-14	110	760
ERNiCrMo-15	174[e]	1200[e]
ERNiCrCoMo-1	90	620
ERNiCrWMo-1	110	760

NOTES:
a. Tensile strength in the as-welded condition, unless otherwise specified.
b. Age-hardened condition: Heat treated at 1475°F [802°C] for 2 hours plus 1100°F [593°C] for 16 hours, then furnace cooled at 25°F [14°C] per hour to 900°F [482°C], then air cooled.
c. Age-hardened condition: Heat treated at 1950°F [1066°C] for 2 hours plus 1300°F [704°C] for 20 hours, then air cooled.
d. Age-hardened condition: Heat treated at 1325°F [718°C] for 8 hours, then furnace cooled to 1150°F [620°C] at 100°F [56°C] per hour, held for 8 hours, then air cooled.
e. Age-hardened condition: Heat treated at 1900°F [1038°C] for 1 hour plus 1350°F [732°C] for 8 hours, then furnace cooled at 100°F [56°C] per hour to 1150°F [621°C] and held for 8 hours, then air cooled.

A9. Discontinued Classifications

Some classifications have been discontinued from one revision of this specification to another. This resulted from either changes in commercial practice or changes in the classification system used in the specification. The discontinued classifications are listed in Table A3, along with the year last included in the specification.

TABLE A3
DISCONTINUED CLASSIFICATIONS

Discontinued Classification	Last Year Published
RNi-2	1969
ERNi-3	1969
RNiCu-5	1969
RNiCu-6	1969
RNiCrFe-4	1969
ERNiMo-4[a]	1969
ERNiMo-5	1969
ERNiMo-6[b]	1969

NOTES:
a. Reclassified as ERNiMo-1 in 1976
b. Reclassified as ERNiMo-3 in 1976

A10. Safety Considerations

A10.1 Burn Protection. Molten metal, sparks, slag, and hot work surfaces are produced by welding, cutting, and allied processes. These can cause burns if precautionary measures are not used. Workers should wear protective clothing made of fire-resistant material. Pant cuffs, open pockets, or other places on clothing that can catch and retain molten metal or sparks should not be worn. High-top shoes or leather leggings and fire-resistant gloves should be worn. Pant legs should be worn over the outside of high-top shoes. Helmets or hand shields that provide protection for the face, neck, and ears, and a head covering to protect the head should be used. In addition, appropriate eye protection should be used.

When welding overhead or in confined spaces, ear plugs to prevent weld spatter from entering the ear canals should be worn in combination with goggles, or the equivalent, to give added eye protection. Clothing should be kept free of grease and oil. Combustible materials should not be carried in pockets. If any combustible substance has been spilled on clothing, a change to clean, fire-resistant clothing should be made before working with open arcs or flames. Aprons, cape sleeves, leggings, and shoulder covers with bibs designed for welding service should be used. Where welding or cutting of unusually thick base metal is involved, sheet metal shields should be used for extra protection.

Mechanization of highly hazardous processes or jobs should be considered. Other personnel in the work area should be protected by the use of noncombustible screens or by the use of appropriate protection as described in the previous paragraph. Before leaving a work area, hot workpieces should be marked to alert other persons of this hazard. No attempt should be made to repair or disconnect electrical equipment when it is under load; disconnection under load produces arcing of the contacts and may cause burns or shock, or both. *(Note: Burns can be caused by touching hot equipment such as electrode holders, tips, and nozzles. Therefore, insulated gloves should be worn when these items are handled, unless an adequate cooling period has been allowed before touching.)*

The following references are for more detailed information on personal protection:

(a) American National Standards Institute. ANSI/ASC Z87.1, *Practice for Occupational and Educational Eye and Face Protection.* New York: American National Standards Institute.[5]

(b) American National Standards Institute. ANSI/ASC Z41.1, *Safety-Toe Footwear.* New York, NY: American National Standards Institute.

(c) American Welding Society. ANSI/ASC Z49.1, *Safety in Welding, Cutting, and Allied Processes.* Miami, Fla.: American Welding Society.

(d) OSHA. *Code of Federal Regulations,* Title 29–Labor, Chapter XVII, Part 1910. Washington, D.C.: U.S. Government Printing Office.[6]

A10.2 Electrical Hazards. Electric shock can kill. However, it can be avoided. Live electrical parts should not be touched. The manufacturer's instructions and recommended safe practices should be read and understood. Faulty installation, improper grounding, and incorrect operation and maintenance of electrical equipment are all sources of danger.

All electrical equipment and the workpieces should be grounded. The workpiece lead is not a ground lead; it is used only to complete the welding circuit. A separate connection is required to ground the workpiece.

The correct cable size should be used since sustained overloading will cause cable failure and can result in possible electrical shock or fire hazard. All electrical connections should be tight, clean, and dry. Poor connections can overheat and even melt. Further, they can produce dangerous arcs and sparks. Water, grease, or dirt should not be allowed to accumulate on plugs, sockets, or electrical units. Moisture can conduct electricity. To prevent shock, the work area, equipment, and clothing should be kept dry at all times. Welders should wear dry gloves and rubber-soled shoes, or stand on a dry board or insulated platform.

[5] ANSI standards may be obtained from the American National Standards Institute, 11 West 42 Street, 13th Floor, New York, NY 10036.

[6] OSHA standards may be obtained from the U.S. Government Printing Office, Washington, DC 20402.

Cables and connections should be kept in good condition. Improper or worn electrical connections may create conditions that could cause electrical shock or short circuits. Worn, damaged, or bare cables should not be used. Open-circuit voltage should be avoided. When several welders are working with arcs of different polarities, or when a number of alternating current machines are being used, the open-circuit voltages can be additive. The added voltages increase the severity of the shock hazard.

In case of electric shock, the power should be turned off. If the rescuer must resort to pulling the victim from the live contact, nonconducting materials should be used. If the victim is not breathing, cardiopulmonary resuscitation (CPR) should be administered as soon as contact with the electrical source is broken. A physician should be called and CPR continued until breathing has been restored, or until a physician has arrived. Electrical burns are treated as thermal burns; that is, clean, cold (iced) compresses should be applied. Contamination should be avoided; the area should be covered with a clean, dry dressing; and the patient should be transported to medical assistance.

Recognized safety standards such as ANSI/ASC Z49.1, *Safety in Welding, Cutting, and Allied Processes,* and NFPA No. 70, *The National Electrical Code* should be followed.[7]

A10.3 Fumes and Gases. Many welding, cutting, and allied processes produce fumes and gases, which may be harmful to health. Fumes are solid particles which originate from welding filler metals and fluxes, the base metal, and any coatings present on the base metal. Gases are produced during the welding process or may be produced by the effects of process radiation on the surrounding environment. Management, welders, and other personnel should be aware of the effects of these fumes and gases. The amount and composition of these fumes and gases depend upon the composition of the filler metal and base metal, welding process, current level, arc length, and other factors.

The possible effects of overexposure range from irritation of eyes, skin, and respiratory system to more severe complications. Effects may occur immediately or at some later time. Fumes can cause symptoms such as nausea, headaches, dizziness, and metal fume fever. The possibility of more serious health effects exists when especially toxic materials are involved. In confined spaces, the shielding gases and fumes might displace breathing air and cause asphyxiation. One's head should always be kept out of the fumes. Sufficient ventilation, exhaust at the arc, or both, should be used to keep fumes and gases from your breathing zone and the general area.

In some cases, natural air movement will provide enough ventilation. Where ventilation may be questionable, air sampling should be used to determine if corrective measures should be applied.

More detailed information on fumes and gases produced by the various welding processes may be found in the following:

(a) The permissible exposure limits required by OSHA can be found in *Code of Federal Regulations,* Title 29 — Labor, Chapter XVII, Part 1910.

(b) The recommended threshold limit values for these fumes and gases may be found in *Threshold Limit Values for Chemical Substances and Physical Agents in the Workroom Environment* published by the American Conference of Governmental Industrial Hygienists (ACGIH).[8]

(c) The results of an AWS-funded study are available in a report entitled, *Fumes and Gases in the Welding Environment.*

A10.4 Radiation. Welding, cutting, and allied operations may produce radiant energy (radiation) harmful to health. One should become acquainted with the effects of this radiant energy.

Radiant energy may be ionizing (such as x-rays), or nonionizing (such as ultraviolet, visible light, or infrared). Radiation can produce a variety of effects such as skin burns and eye damage, depending on the radiant energy's wavelength and intensity, if excessive exposure occurs.

A10.4.1 Ionizing Radiation. Ionizing radiation is produced by the electron beam welding process. It is ordinarily controlled within acceptance limits by use of suitable shielding enclosing the welding area.

A10.4.2 Nonionizing Radiation. The intensity and wavelengths of nonionizing radiant energy produced depend on many factors, such as the process, welding parameters, electrode and base-metal composition, fluxes, and any coating or plating on the base metal. Some processes such as resistance welding and cold pressure welding ordinarily produce negligible quantities of radiant energy. However, most arc welding and cutting processes (except submerged arc welding when used properly), laser beam welding and torch welding,

[7] NFPA documents are available from the National Fire Protection Association, 1 Batterymarch Park, Quincy, MA 02269.

[8] ACGIH documents are available from the American Conference of Governmental Industrial Hygienists, 1330 Kemper Meadow Drive, Suite 600, Cincinnati, OH 45240-1634.

cutting, brazing, or soldering can produce quantities of nonionizing radiation such that precautionary measures are necessary.

Protection from possible harmful effects caused by nonionizing radiant energy from welding include the following measures:

(a) One should not look at welding arcs except through welding filter plates which meet the requirements of ANSI/ASC Z87.1, *Practice for Occupational and Educational Eye and Face Protection.* It should be noted that transparent welding curtains are not intended as welding filter plates, but rather are intended to protect passersby from incidental exposure.

(b) Exposed skin should be protected with adequate gloves and clothing as specified in ANSI/ASC Z49.1, *Safety in Welding, Cutting, and Allied Processes.*

(c) Reflections from welding arcs should be avoided, and all personnel should be protected from intense reflections. *(Note: Paints using pigments of substantially zinc oxide or titanium dioxide have a lower reflectance for ultraviolet radiation.)*

(d) Screens, curtains, or adequate distance from aisles, walkways, etc., should be used to avoid exposing passersby to welding operations.

(e) Safety glasses with UV-protective side shields have been shown to provide some beneficial protection from ultraviolet radiation produced by welding arcs.

A10.4.3 Ionizing radiation information sources include the following:

(a) American Welding Society. AWS F2.1-78, *Recommended Safe Practices for Electron Beam Welding and Cutting.* Miami, FL.: American Welding Society.

(b) Manufacturer's product information literature.

A10.4.4 Nonionizing radiation information sources include:

(a) American National Standards Institute. ANSI/ASC Z136.1, *Safe Use of Lasers.* New York: American National Standards Institute.

(b) —. ANSI/ASC Z87.1, *Practice for Occupational and Educational Eye and Face Protection.* New York: American National Standards Institute.

(c) American Welding Society. ANSI/ASC Z49.1, *Safety in Welding, Cutting, and Allied Processes.* Miami, FL: American Welding Society.

(d) Hinrichs, J. F. "Project Committee on Radiation-Summary Report." *Welding Journal* 57(1):62–65, 1978.

(e) Marshall, W. J., Sliney, D. H., et al. "Optical radiation levels produced by air-carbon arc cutting processes." *Welding Journal* 59(3):43–46, 1980.

(f) Moss, C. E., and Murray, W. E. "Optical radiation levels produced in gas welding, torch brazing, and oxygen cutting." *Welding Journal* 58(9):37–46, 1979.

(g) Moss, C. E. "Optical radiation transmission levels through transparent welding curtains." *Welding Journal* 58(3):69-s to 75-s, 1979.

(h) National Technical Information Service. Nonionizing Radiation Protection Special Study No. 42-0053-77, *Evaluation of the Potential Hazards from Actinic Ultraviolet Radiation Generated by Electric Welding and Cutting Arcs.* Springfield, VA: National Technical Information Service.[9]

(i) National Technical Information Service. Nonionizing Radiation Protection Special Study No. 42-0312-77, *Evaluation of the Potential Retina Hazards from Optical Radiation Generated by Electrical Welding and Cutting Arcs.* Springfield, VA: National Technical Information Service.

[9] National Technical Information documents are available from the National Technical Information Service, Springfield, VA 22161.

SPECIFICATION FOR WELDING ELECTRODES AND RODS FOR CAST IRON

SFA-5.15

(Identical with AWS Specification A5.15-90)

1. Scope

This specification prescribes requirements for the classification of the following:

(a) Rods for oxyfuel gas welding;

(b) Electrodes for gas metal arc welding;

(c) Electrodes for flux cored arc welding;

(d) Electrodes for shielded metal arc welding.

These filler metals are suitable for welding gray cast iron, malleable cast iron, nodular cast iron, compacted graphite cast iron, and certain alloy cast irons.[1]

PART A — GENERAL REQUIREMENTS

2. Classification

2.1 The electrodes and rods covered by this specification are classified according to chemical composition, as specified in Tables 1A, 1B, and 1C.

2.2 Electrodes and rods classified under one classification shall not be classified under any other classification in this specifications.

2.3 The electrodes and rods classified under this specification are intended for oxyfuel gas welding, shielded metal arc welding, gas metal arc welding, or flux cored arc welding, as applicable, but that is not to prohibit their use with any other process for which they are found suitable.

[1] Copper-base filler metals frequently used in the braze welding of cast iron are no longer included in this specification. For information pertaining to these materials see A7.6 in the Appendix.

3. Acceptance

Acceptance[2] of the welding electrodes shall be in accordance with the provisions of ANSI/AWS A5.01, *Filler Metal Procurement Guidelines.*[3]

4. Certification

By affixing the AWS specification and classification designations to the packaging, or the classification to the product, the manufacturer certifies that the product meets the requirements of this specification.[4]

5. Units of Measure and Rounding Off Procedure

5.1 U.S. Customary Units are the standard units of measure in this specification. The SI Units are given as equivalent values to the U.S. Customary Units. The standard sizes and dimensions in the two system are not identical, and for this reason, conversion from a standard size or dimension in one system will not always coincide with a standard size or dimension in the other. Suitable conversions, encompassing standard sizes of both, can be made, however, if appropriate tolerances are applied in each case.

5.2 For the purpose of determining conformance with this specification, an observed or calculated value shall be rounded to the "nearest unit" in the last right-hand

[2] See Section A3 (in the Appendix) for further information concerning acceptance, testing of the material shipped, and ANSI/AWS A5.01, *Filler Metal Procurement Guidelines.*

[3] AWS standards can be obtained from the American Welding Society, 550 N.W. LeJeune Road, P.O. Box 351040, Miami, Florida 33135.

[4] See Section A4 (in the Appendix) for further information concerning certification and the testing called for to meet this requirement.

TABLE 1A[1]
CHEMICAL COMPOSITION REQUIREMENTS FOR UNDILUTED WELD METAL FOR SHIELDED METAL ARC AND FLUX CORED ARC WELDING ELECTRODES

		Weight Percent[1] [2] [3]										
AWS Classification[4]	UNS Number[5]	C	Mn	Si	P	S	Fe	Ni[6]	Mo	Cu[7]	Al	Other Elements, Total
Shielded Metal Arc Welding Electrodes												
ENi-CI	W82001	2.0	2.5	4.0	...	0.03	8.0	85 min.	...	2.5	1.0	1.0
ENi-CI-A	W82003	2.0	2.5	4.0	...	0.03	8.0	85 min.	...	2.5	1.0–3.0	1.0
ENiFe-CI	W82002	2.0	2.5	4.0	...	0.03	Rem.	45–60	...	2.5	1.0	1.0
ENiFe-CI-A	W82004	2.0	2.5	4.0	...	0.03	Rem.	45–60	...	2.5	1.0–3.0	1.0
ENiFeMn-CI	W82006	2.0	10–14	1.0	...	0.03	Rem.	35–45	...	2.5	1.0	1.0
ENiCu-A	W84001	0.35–0.55	2.3	0.75	...	0.025	3.0–6.0	50–60	...	35–45	...	1.0
ENiCu-B	W84002	0.35–0.55	2.3	0.75	...	0.025	3.0–6.0	60–70	...	25–35	...	1.0
Flux Cored Arc Welding Electrodes												
ENiFeT3-CI[8]	W82032	2.0	3.0–5.0	1.0	...	0.03	Rem.	45–60	...	2.5	1.0	1.0

notes follow on next page

TABLE 1B[1]
CHEMICAL COMPOSITION REQUIREMENTS FOR CORE WIRE FOR SHIELDED METAL ARC WELDING ELECTRODES

		Weight Percent[5]										
AWS Classification[5]	UNS Number[5]	C	Mn	Si	P	S	Fe	Ni	Mo	Cu	Al	Other Elements, Total
Shielded Metal Arc Welding Electrodes												
ESt	K01520	0.15	0.60	0.15	0.04	0.04	Rem.	...	...	...	...	...

notes follow on next page

place of figures used in expressing the limiting value in accordance with the rounding off method given in ANSI/AWS A1.1, *Metric Practice Guide for the Welding Industry.*

PART B — TEST, PROCEDURES, AND REQUIREMENTS

6. Summary of Tests

Chemical analysis, as specified in Table 2, of the filler metal or rod stock from which the filler metal is made, or the core wire, or the undiluted weld metal is the only test required for classification of a product under this specification.

7. Retest

If the results of any test fail to meet the requirement, that test shall be repeated twice. The results of both tests shall meet the requirements. Specimens for retest may be taken from the original test assembly or sample, or from new test assemblies or samples. For chemical analysis, retest need only be for those specific elements that failed to meet the test requirement.

TABLE 1C
CHEMICAL COMPOSITION REQUIREMENTS FOR RODS AND BARE ELECTRODES

AWS Classification[4]	UNS Number[5]	Weight Percent[1][2][3] C	Mn	Si	P	S	Fe	Ni[6]	Mo	Cu[7]	Mg	Al	Ce	Other Elements, Total
Cast Iron Welding Rods for OFW														
RCI	F10090	3.2–3.5	0.60–0.75	2.7–3.0	0.50–0.75	0.10	Rem.	Trace	Trace	...	...	.....		...
RCI-A	F10091	3.2–3.5	0.50–0.70	2.0–2.5	0.20–0.40	0.10	Rem.	1.2–1.6	0.25–0.45	...	...	.....		...
RCI-B	F10092	3.2–4.0	0.10–0.40	3.2–3.8	0.05	0.015	Rem.	0.50	...	...	0.04–0.10	...	0.20	...
Electrodes for Gas Metal Arc Welding														
ERNi-CI	N02215	1.0	2.5	0.75	...	0.03	4.0	90 min.	...	4.0	...	.....		1.0
ERNiFeMn-CI	N02216	0.50	10–14	1.0	...	0.03	Rem.	35–45	...	2.5	...	1.0	...	1.0

NOTES:
(1) The weld metal, core wire, or the filler metal, as specified, shall be analyzed for the specific elements for which values are shown in this table. If the presence of other elements is indicated, in the course of this work, the amount of those elements shall be determined to ensure that their total does not exceed the limit specified for "Other Elements, Total" in the last column of the table.
(2) Single values shown are maximum, unless otherwise noted.
(3) "Rem." stands for Remainder.
(4) Copper-base filler metals frequently used in the braze welding of cast irons are no longer included in this specification. For information pertaining to these materials see A7.6.
(5) SAE/ASTM Unified Numbering System for Metals and Alloys.
(6) Nickel plus incidental cobalt.
(7) Copper plus incidental silver.
(8) No shielding gas shall be used for classification ENiFeT3-CI.

8. Weld Test Assembly

8.1 One test assembly is required. It is the weld pad in Fig. 1 for chemical analysis of undiluted weld metal from electrodes for shielded metal arc or flux cored arc welding electrodes, except for the ESt classification for which the core is analyzed.

8.2 Preparation of the weld test assembly shall be as prescribed in para. 8.3 and Fig. 1. The base metal for the assembly shall be gray iron, nodular iron, or carbon steel. Testing of the assembly shall be as prescribed in paras. 9.2 and 9.3.

8.3 Weld Pad. When required by Table 2, a weld pad shall be prepared as specified in Fig. 1. Base metal of any convenient size, of the type specified in para. 8.2, shall be used as the base for the weld pad. The surface of the base metal on which the filler metal is deposited shall be clean. The pad shall be welded in the flat position with multiple beads and multiple layers to obtain undiluted weld metal. The preheat temperature shall not be less than 60°F (16°C) and the interpass temperature shall not exceed 300°F (150°C). The slag shall be removed after each pass. The pad may be quenched in water between passes. The dimensions of the completed pad shall be as shown in Fig. 1, for

TABLE 2
REQUIRED TESTS

AWS Classification	Chemical Analysis of Undiluted Weld Metal from Weld Pad[1]	Chemical Analysis of Filler Metal[1]
ENi-CI	Required	N.R.
ENi-CI-A	Required	N.R.
ENiFe-CI	Required	N.R.
ENiFe-CI-A	Required	N.R.
ENiFeMn-CI	Required	N.R.
ENiCu-A	Required	N.R.
ENiCu-B	Required	N.R.
ENiFeT3-CI	Required	N.R.
RCI	N.R.	Required
RCI-A	N.R.	Required
RCI-B	N.R.	Required
ERNi-CI	N.R.	Required
ERNiFeMn-CI	N.R.	Required
ESt	N.R.	Required[2]

NOTES:
(1) "N.R." means that the test is not required.
(2) Chemical requirements for the ESt classification are based on the composition of the core wire without any flux coatings.

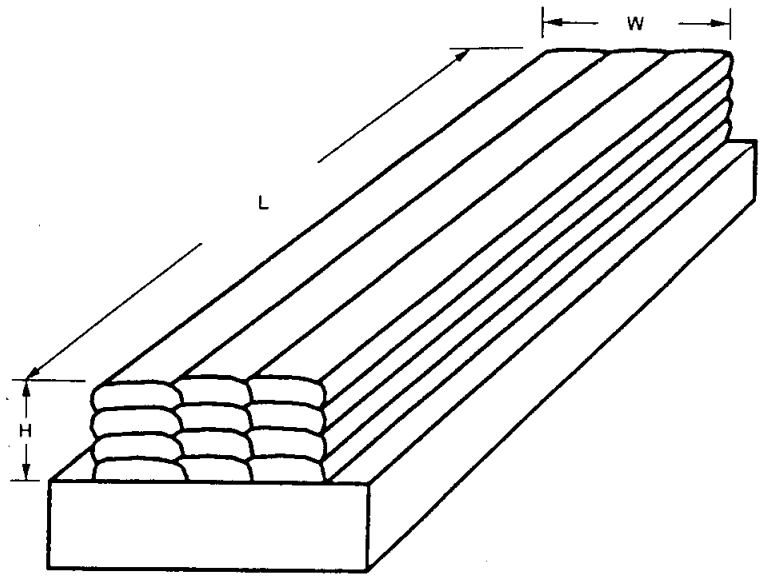

Shielded Metal Arc Welding			Flux Cored Arc Welding			
Electrode Diameter	Minimum Height (H)	Minimum Length (L)	Electrode Diameter	Minimum Height (H)	Minimum Length (L)	Min. No. of Layers
1/8 in. (3.2 mm) and less	1/2 in. (13 mm)	1-1/2 in. (38 mm)	.052 in. (1.3 mm) and less	5/8 in. (16 mm)	3 in. (76 mm)	4
Greater than 1/8 in. (3.2 mm)	7/8 in. (22 mm)	2 in. (51 mm)	Greater than .052 in. (1.3 mm)	1 in. (25 mm)	4 in. (102 mm)	4

GENERAL NOTE: The width (W) of the weld metal shall be sufficient for the method of analysis. No shielding gas shall be used for classification ENiFeT3-Cl.

FIG. 1 PAD FOR CHEMICAL ANALYSIS OF UNDILUTED WELD METAL

each size of electrode. Testing of this assembly shall be as specified in para. 9.2.

9. Chemical Analysis

9.1 For solid filler metal classified in Table 1A, and the core wire for electrodes classified in Table 1B, a sample of the filler metal, core wire, or the rod stock from which the filler metal or core wire is made, shall be prepared for chemical analysis. Solid filler metal, when analyzed for elements that are present in a coating (copper flashing, for example), shall be analyzed without removing the coating. When the filler metal is analyzed for elements other than those in the coating, the coating shall be removed if its presence affects the results of the analysis for other elements. Rod stock analyzed for elements not in the coating may be analyzed prior to applying the coating.

9.2 For electrodes classified in Table 1A, a sample shall be analyzed in the form of weld metal, not filler metal. The sample for analysis shall be taken from

weld metal obtained with the filler metal. The sample shall come from a weld pad as shown in Fig. 1. The top surface of the pad described in para. 8.3 and shown in Fig. 1 shall be removed, discarded, and a sample for analysis shall be obtained from the underlying metal by any appropriate mechanical means. The sample shall be free of slag.

For covered electrodes 1/8 in. (3.2 mm) and smaller and flux cored electrodes .052 in. (1.3 mm) diameter and smaller, the sample shall be taken at least 7/16 in. (11 mm) from the nearest surface of the base metal. For covered electrodes larger than 1/8 in. (3.2 mm) diameter and flux cored electrodes larger than .052 in. (1.3 mm), the sample shall be taken at least 9/16 in. (14 mm) from that surface.

9.3 The sample shall be analyzed by accepted analytical methods. The referee method shall be the appropriate one of the following:[5]

(a) ASTM E 39, Standard Method for Chemical Analysis of Nickel;

(b) ASTM E 76, Standard Methods for Chemical Analysis of Nickel-Copper Alloys;

(c) ASTM E 350, Standard Method for Chemical Analysis of Carbon Steel, Low-Alloy Steel, Silicon Electrical Steel, Ingot Iron and Wrought Iron;

(d) ASTM E 351, Standard Methods for Chemical Analysis of Cast Iron—All types;

(e) ASTM E 353, Standard Methods for Chemical Analysis of Stainless Heat Resisting, Maraging, and Other Similar Chromium-Nickel-Iron Alloys;

(f) ASTM E 354, Standard Method for Chemical Analysis of High Temperature Electric, Magnetic, and Other Similar Iron, Nickel, and Cobalt Alloys.

9.4 The results of the analysis shall meet the requirements of Table 1 for the classification of filler metal under test.

TABLE 3
STANDARD SIZES AND LENGTHS OF WELDING RODS(1)

AWS Classification	Size, in.	Size Tolerance, in.	Length, in.	Length Tolerance, in.
RCI	1/8 round	±1/32	18	+1/2, −2
	1/8 square	±1/32	20	+1/4, −2
	3/16, 1/4, 5/16, 3/8, 1/2, round or square	±1/32	24	±1/4, −2
RCI-A	1/8 3/16, 1/4, 5/16, 3/8, 1/2, round or square	±1/32	24	+1/4, −2
RCI-B	3/16, 1/4, 3/8, 1/2 round or square	1/32	24	+1/4, −2

NOTE:
(1) Sizes and lengths other than these shall be as agreed to by supplier and purchaser.

SI Equivalents	
in.	mm
1/32 (0.031)	0.8
1/8 (0.125)	3.2
5/32 (0.156)	4.0
3/16 (0.188)	4.8
1/4 (0.250)	6.4
5/16 (0.313)	8.0
3/8 (0.375)	9.5
1/2 (0.500)	12.7
2	51
18	450
20	500
24	600

PART C — MANUFACTURE, IDENTIFICATION, AND PACKAGING

10. Welding Rods

10.1 Method of Manufacture. The welding rods classified according to this specification may be manufactured by any method that will produce rods that meet the requirements of this specification.

10.2 Standard Sizes and Lengths. Standard sizes for welding rod shall be as shown in Table 3.

10.3 Finish and Uniformity. All rods shall have a smooth finish that is free from slivers, depressions, scratches, scale, seams, laps, and foreign matter that would adversely affect the welding characteristics or the properties of the weld metal.

10.4 Standard Package Forms. Standard package forms are straight lengths. Standard package dimensions are not specified. Welding rods shall be packed in containers of 5, 10, 25, 30, 50, 60, or 100 lb (2.5,

[5] ASTM standards can be obtained from the American Society for Testing and Materials, 100 Barr Harbor Drive, West Conshohocken, PA 19428-2959.

4.5, 11, 14, 23, 27 or 45 g) net weight. Other package weights shall be as agreed upon by supplier and purchaser.

10.5 Packaging. Welding rods shall be suitably packaged to ensure against damage shipment and storage under normal conditions.

10.6 Marking of Packages

10.6.1 The following product information (as a minimum) shall be legibly marked on the outside of each unit package.

(a) AWS specification and classification designations (year of issue may be excluded);

(b) Supplier's name and trade designation;

(c) Size and net weight;

(d) Lot, control, or heat number.

10.6.2 Marking of any overpacking of unit packages with the items listed in para. 10.6.1 shall be optional with the manufacturer.

10.6.3 The following precautionary information (as a minimum) shall be prominently displayed in legible print on all packages of welding rods, including individual unit packages enclosed within a larger package.

WARNING:

PROTECT yourself and others.

Read and understand this information.

FUMES AND GASES can be dangerous to health.

HEAT RAYS (INFRARED RADIATION from flame or hot metal) can injure eyes.

- Before use read and understand the manufacturer's instructions, the Manufacturers Safety Data Sheets (MSDSs), and your employer's safety practices.
- Keep your head out of the fumes.
- Use enough ventilation, exhaust at the flame, or both, to keep fumes and gases from your breathing zone and the general area.
- Wear correct eye, ear and body protection.
- See American National Standard Z49.1, *Safety in Welding and Cutting*, published by the American Welding Society, 550 N.W. LeJeune Road, P.O. Box 351040, Miami, Florida 33135, and OSHA Safety and Health Standards, 29 CFR 1910, available from the Government Printing Office, Washington, DC 20402

DO NOT REMOVE THIS INFORMATION

TABLE 4
STANDARD SIZES AND LENGTHS FOR SHIELDED METAL ARC WELDING ELECTRODES

AWS Classification	Diameter, in.	Size Tolerance, in.	Length, in.	Length Tolerance, in.
ENi-CI ENi-CI-A	3/32	±0.003	9, 12, and 14	±1/4
ENiFe-CI ENiFe-CI-A ENiFeMn-CI ESt	1/8, 5/32, 3/16, 1/4	±0.003	12 and 14	±1/4
ENiCu-A ENiCu-B	3/32, 1/8, 5/32, 3/16	±0.003	12 and 14	±1/4

GENERAL NOTE: Sizes and lengths other than these shall be available as agreed upon by the supplier and purchaser.

SI Equivalents	
in.	mm
0.003	0.08
3/32	2.4
1/8	3.2
5/32	4.0
3/16	4.8
1/4	6.4
9	230
12	300
14	350

11. Shielded Metal Arc Welding Electrodes

11.1 Method of Manufacture. The welding electrodes classified according to this specification may be manufactured by any method that will produce electrodes that meet the requirements of this specification.

11.2 Standard Sizes and Lengths

11.2.1 Standard sizes (diameter of the core wire) and lengths for electrodes are shown in Table 4.

11.2.2 The diameter of the core wire shall not vary more than ±0.003 in. (0.08 mm) from the diameter specified. The length shall not vary more than ±1/4 in. (±6.4 mm) from that specified.

11.3 Core Wire and Covering

11.3.1 The core wire and covering shall be free of defects that would interfere with uniform deposition of the electrode.

11.3.2 The core wire and covering shall be concentric to the extent that the maximum core-plus-one-

covering dimension shall not exceed the minimum core-plus-one-covering dimension by more than:

(a) seven percent of the mean dimension in sizes $^3/_{32}$ in. (2.4 mm) and smaller;

(b) five percent of the mean dimension in sizes $^1/_8$ in. (3.2 mm) and $^5/_{32}$ in. (4.0 mm), and;

(c) four percent of the mean dimension in sizes $^3/_{16}$ in. (4.8 mm) and larger.

The concentricity may be measured by any suitable means.

11.3.3 The covering of electrodes shall be such that it is not readily damaged by ordinary handling.

11.4 Exposed Core

11.4.1 The grip end of each electrode shall be bare (free of covering) for a distance of not less than $^1/_2$ in. (12 mm) nor more than $1^1/_4$ in. (32 mm) for electrodes $^5/_{32}$ in. (4.0 mm) and smaller, and not less than $^3/_4$ in. (19 mm) nor more than $1^1/_2$ in. (38 mm) for electrodes $^3/_{16}$ in. (4.8 mm) and larger, to provide for electrical contact with the electrode holder.

11.4.2 The arc end of each electrode shall be sufficiently bare and the covering sufficiently tapered to permit easy striking of the arc. The length of the bare portion (measured from the end of the core wire to the location where the full cross-section of the covering is obtained) shall not exceed $^1/_8$ in. (3.2 mm) or the diameter of the core wire, whichever is less. Electrodes with chipped covering near the arc end, baring the core wire no more than the lesser of $^1/_2$ in. (13 mm) or twice the diameter of the core wire, meet the requirements of this specification, provided no chip uncovers more than 50 percent of the circumference of the core.

11.5 Electrode Identification. All electrodes shall be identified as follows:

11.5.1 At least one imprint of the electrode classification shall be applied to the electrode covering within $2^1/_2$ in. (65 mm) of the grip end of the electrode.

11.5.2 The numbers and letters of the imprint shall be bold block type of a size large enough to be legible.

11.5.3 The ink used for imprinting shall provide sufficient contrast with the electrode covering so that in normal use the numbers and letters are legible both before and after welding.

11.5.4 The prefix letter "E" in the electrode classification may be omitted from the imprint.

11.6 Packaging

11.6.1 Electrodes shall be suitably packaged to protect against damage during shipment and storage under normal conditions.

11.6.2 Standard package weights shall be as specified in para. 10.4 or as agreed upon by supplier and purchaser.

11.7 Marking of Packages

11.7.1 The following product information (as a minimum) shall be legibly marked on the outside of each unit package.

(a) AWS specification and classification designations (year of issue may be excluded);

(b) Supplier's name and trade designation;

(c) Size and net weight;

(d) Lot, control, or heat number.

11.7.2 The following precautionary information (as a minimum) shall be prominently displayed in legible print on all packages of electrodes, including individual unit packages enclosed within a larger package:

WARNING:

PROTECT yourself and others.

Read and understand this information.

FUMES AND GASES can be dangerous to health.

ARC RAYS can injure eyes and burn skin.

ELECTRIC SHOCK can kill.

- Before use read and understand the manufacturer's instructions, the Material Safety Data Sheets (MSDSs), and your employer's safety practices.
- Keep your head out of the fumes.
- Use enough ventilation, exhaust at the arc, or both, to keep fumes and gases away from your breathing zone, and the general area.
- Wear correct eye, ear and body protection.
- Do not touch live electrical parts.
- See American National Standard Z49.1, *Safety in Welding and Cutting,* published by the American Welding Society, 550 N.W. LeJeune Road, P.O. Box 351040, Miami, Florida 33135; and OSHA Safety and Health Standards, 29 CFR 1910, available from the Government Printing Office. Washington, DC 20402.

DO NOT REMOVE THIS INFORMATION

TABLE 5
STANDARD SIZES AND TOLERANCES FOR GAS METAL ARC AND FLUX CORED ARC WELDING ELECTRODES

Standard Package Form	Standard Sizes Diameter		Tolerance	
	in.	mm	in.	mm
Coils With Support Spools	. . .	.035 0.9	±0.002	±0.051
	. . .	.045 1.1		
	. . .	.052 1.3		
	1/16	.063 1.6		
Coils Without Support, Coils With Support, Spools, Drums	5/64	0.078 2.0	±0.003	±0.076
	3/32	0.094 2.4		
	7/64	0.109 2.8		
		.120 3.0		
Coils With Support Drums	1/8	0.125 3.2	±0.004	±0.10
	5/32	0.156 4.0		

GENERAL NOTE: Dimensions and tolerances other than those shown shall be as agreed between the purchaser and supplier.

12. Gas Metal Arc and Flux Cored Arc Welding Electrodes

12.1 Method of Manufacture. The filler metals classified according to this specification may be manufactured by any method that will produce filler metals that meet the requirements of this specification.

12.2 Standard Sizes. Standard sizes for filler metal in different package forms (coils with support, coils without support, spools, and drums) shall be as shown in Table 5.

12.3 Finish and Uniformity

12.3.1 All filler metal shall have a smooth finish that is free from slivers, depressions, scratches, scale, seams, laps (exclusive of the longitudinal joint in flux cored electrodes), and foreign matter that would adversely affect the welding characteristics, the operation of the welding equipment, or the properties of the weld metal.

12.3.2 Each continuous length of filler metal shall be from a single lot of material, and welds, when present, shall have been made so as not to interfere with the uniform, uninterrupted feeding of the filler metal on automatic and semiautomatic equipment.

12.3.3 The core ingredients of flux cored arc welding electrodes shall be distributed with sufficient uniformity throughout the length of the electrode so as not to adversely affect the performance of the electrode or the properties of the weld metal.

12.4 Standard Package Forms

12.4.1 Standard package forms are coil with support, coils without support, spools, and drums. Standard package dimensions and weights for each form are given in Tables 6 and 7. Package forms, sizes, and weights other than these shall be as agreed between purchaser and manufacturer.

12.4.2 The liners in coils with support shall be designed and constructed to prevent distortion of the coil during normal handling and use and shall be clean and dry enough to maintain the cleanliness of the filler metal.

12.4.3 Spools shall be designed (see Fig. 2 and Fig. 3) and constructed to prevent distortion of the filler metal during normal handling and use and shall be clean and dry enough to maintain the cleanliness of the filler metal.

12.5 Winding Requirements

12.5.1 The filler metal shall be wound so that kinks, waves, sharp bends, overlapping, or wedging are not encountered, leaving the filler metal free to unwind without restriction. The outside end of the filler metal (the end welding is to begin with) shall be identified so it can be located readily and shall be fastened to avoid unwinding.

12.5.2 The cast and helix of filler metal in coils, spools, and drums shall be such that the filler metal

TABLE 6
STANDARD DIMENSIONS FOR COILS WITH AND WITHOUT SUPPORT AND DRUMS

Coils Without Support		Coils With Support				Drums	
Inside Diameter of Coil,		Inside Diameter of Liner		Width of Wound Electrode, max,		Outside Diameter	
in.	mm	in.	mm	in.	mm	in.	mm
12	300	12 ± 1/8	300 ± 3.2	4 5/8	120	15 1/2	390
22 1/2	570					20	510
						23	580

TABLE 7
STANDARD PACKAGE DIMENSIONS AND WEIGHTS[1]

	Package Size			
	ID		Net Weight of Electrode,[2]	
Type of package	in.	mm	lb	kg
Coils Without Support	12	300	50	23
	22 1/2	570	100	45
Coils With Support	12	300	50	27
			60	23
Spools	12	300	25	11
	14	360	50	23
			60	27
	30	760	600	273
Drums	15 1/2	390	200	90
	20	510	500	230
	23	580	1100	500

NOTES:
(1) Sizes and net weights other than those specified shall be as agreed between supplier and purchaser.
(2) Net weights shall not vary more than ±10% percent.

will feed in an uninterrupted manner in semiautomatic and automatic equipment.

12.6 Filler Metal identification

12.6.1 The product information and the precautionary information required in para. 12.8 for marking each package shall also appear on each coil, each spool, and each drum.

12.6.2 Coils without support shall have a tag containing this information securely attached to the filler metal at the inside end of the coil.

12.6.3 Coils with support shall have the information securely affixed in a prominent location on the support.

12.6.4 Spools shall have the information securely affixed in a prominent location on the outside of at least one flange of the spool.

12.6.5 Drums shall have the information securely affixed in a prominent location on the side of the drum.

12.7 Packaging. Filler metal shall be suitably packaged to ensure against damage during shipment and storage under normal conditions.

12.8 Marking of Packages

12.8.1 The following product information (as a minimum) shall be legibly marked so as to be visible from the outside of each unit package:

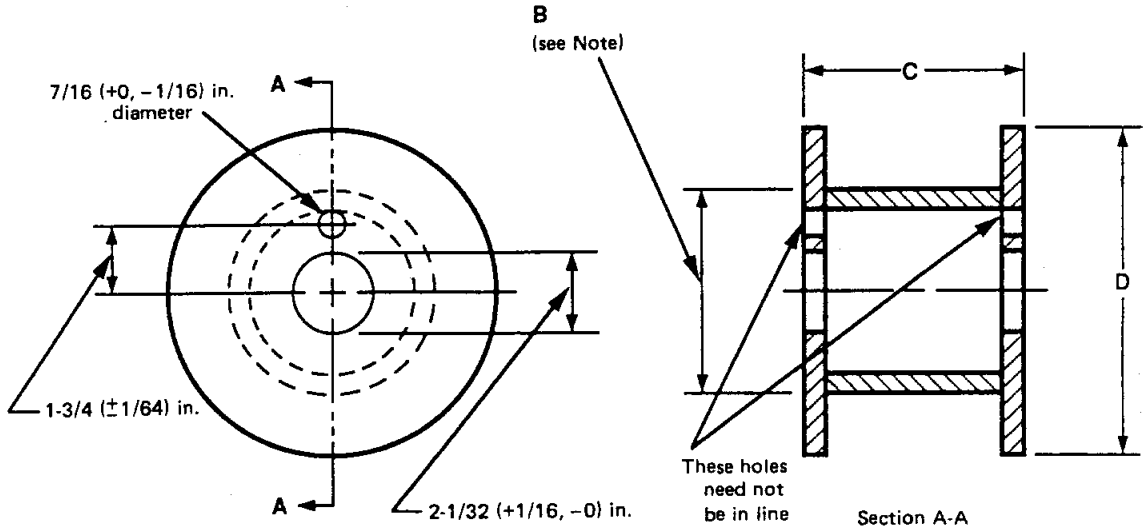

NOTE: Dimension B, outside diameter of barrel, shall be such as to permit proper feeding of the filler metals.

Dimensions		
Spool size	C	D, maximum
in.	in.	in.
12	4 ± 1/16	12
14	4 ± 1/16	14

Si Equivalents	
in.	mm
1/64 (.016)	0.4
1/32 (.031)	0.8
1/16 (.062)	1.6
7/16 (.438)	11.1
1/2 (.500)	13
3/4 (.750)	19.0
1	25.4
2	50.8
4	102
12	305
14	356

FIG. 2 DIMENSIONS OF 12 AND 14 IN. (300 AND 360 MM) SPOOLS

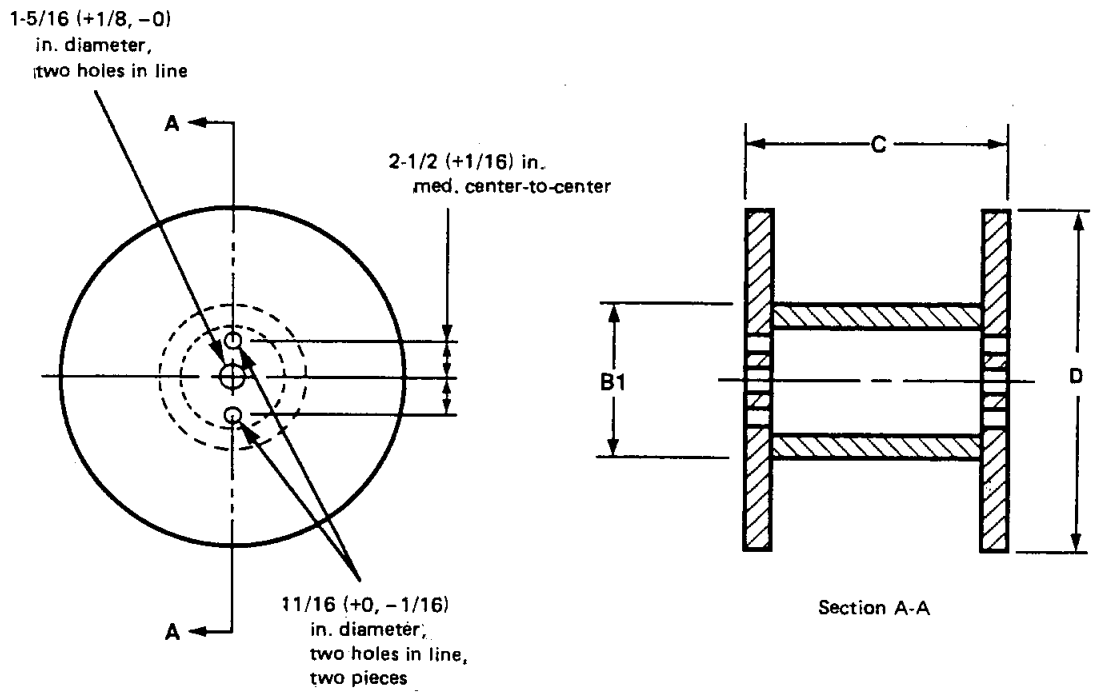

GENERAL NOTE: Dimension B, outside diameter of barrel, shall be such as to permit proper feeding of the filler metals.

Dimensions		
Spool size	D	C, maximum
in.	in.	in.
30	30 ± 1/2	13 ± 1/2

Si Equivalents	
in.	mm
1/16 (.016)	0.4
1/8 (.125)	3.2
5/16 (.312)	7.9
1/2 (.500)	12.7
11/16 (.688)	17.5
1	25.4
2	50.8
13	330
30	762

FIG. 3 DIMENSIONS OF 30 IN. (760 MM) SPOOLS

(a) AWS specification and classification designations (year of issue may be excluded);

(b) Supplier's name and trade designation;

(c) Size and net weight;

(d) Lot, control, or heat number.

12.8.2 The following precautionary information (as a minimum) shall be prominently displayed in legible print on all packages of welding electrodes, including individual unit packages enclosed within a larger package.

WARNING:

PROTECT yourself and others.

Read and understand this information.

FUMES AND GASES can be dangerous to health.

ARC RAYS can injure eyes and burn skin.

ELECTRIC SHOCK can kill.

- Before use read and understand the manufacturer's instructions, the Material Safety Data Sheets (MSDSs), and your employer's safety practices.
- Keep your head out of the fumes.
- Use enough ventilation, exhaust at the arc, or both, to keep fumes and gases away from your breathing zone, and the general area.
- Wear correct eye, ear and body protection.
- Do not touch live electrical parts.
- See American National Standard Z49.1, *Safety in Welding and Cutting,* published by the American Welding Society, 550 N.W. LeJeune Road, P.O. Box 351040, Miami, Florida 33135; OSHA Safety and Health Standards, 29 CFR 1910, available from the U.S. Printing Office. Washington, DC 20402.

DO NOT REMOVE THIS INFORMATION

Appendix
Guide to AWS A5.15-90, Specification for Welding Electrodes and Rods for Cast Iron

(This Appendix is not a part of ANSI/AWS A5.15-90, *Specification for Welding Electrodes and Rods for Cast Iron,* but is included for informational purposes only.[6])

A1. Introduction

The purpose of this Appendix is to correlate the classifications with their intended applications so the specification can be used effectively. Reference to appropriate base metal specifications is made whenever that can be done, and when it would be helpful. Such references are intended only as examples rather than complete listings of the base metal for which each filler metal is suitable.

A2. Classification System

A2.1 The system for identifying welding rod and electrode classifications used in this specification follows the standard pattern used in other AWS filler metal specifications. The letter "E" at the beginning of each classification designation stands for electrode, the letters "ER" at the beginning of each classification designation stands for a filler metal which is suitable for use as either an electrode or rod, and the letter "R"at the beginning of each classification designation stands for welding rod. The next letters in the filler metal designation are based on the chemical composition of the filler metal or undiluted weld metal. Thus, NiFe is a nickel-iron alloy, NiCu is a nickel-copper alloy, etc. Where different compositional limits in filler metals of the same alloy family result in more than one classification, the individual classifications are differentiated by the designators "A"or "B", as in ENiCu-A and ENiCu-B.

A2.2 For flux cored electrodes the designator "T" indicates a tubular electrode. The number "3" indicates that the electrode is used primarily without an external shielding gas.

A2.3 Most of the classifications within this specification contain the usage designator "CI" after the hyphen which indicates that these filler metals are intended for cast iron applications. The usage designator is included to eliminate confusion with other filler metal classifications from other specifications which are designed for alloys other than cast irons. The two exceptions, ENiCu-A and ENiCu-B, preceded the introduction of the usage designator and have never had the "CI" added.

A2.4 The chemical symbols have been used in all the filler metals except the cast iron and mild steel groups. Since there are no chemical symbols for cast iron and mild steel, the letters "CI" and "St" have been assigned to this group to designate cast iron and mild steel filler metals, respectively. The suffixes "A" and "B" are used to differentiate two alloys of the cast iron filler metals from other cast iron rod classifications.

A3. Acceptance

A3.1 Acceptance of all welding materials classified under this specification is in accordance with ANSI/AWS A5.01, *Filler Metal Procurement Guidelines,* as the specification states. Any testing a purchaser requires of the supplier, for material shipped in accordance with this specification, shall be clearly stated in the purchase order, according to the provisions of ANSI/AWS A5.01. In the absence of any such statement in the purchase order, the supplier may ship the material with whatever testing normally conducted on material of that classification, as specified in Schedule F, Table 1, of ANSI/AWS A5.01. Testing in accordance with

[6] For additional information, refer to AWS D11.2, Guide for Welding Iron Castings.

any other Schedule in that Table shall be specifically required by the purchase order. In such cases, acceptance of the material shipped shall be in accordance with those requirements.

A4. Certification

A4.1 The act of placing the AWS Specification and Classification designations on the packaging enclosing the product, or the classification on the product itself, constitutes the supplier's (manufacturer's) certification that the product meets all of the requirements of the specification.

A4.2 The only testing requirement implicit in this certification is that the manufacturer has actually conducted the test required by the specification on material that is representative of that being shipped, and that the material met the requirements of the specification. Representative material, in this case, is any production run of that classification using the same formulation. "Certification" is not to be construed to mean that tests of any kind were necessarily conducted on samples of the specific material shipped. Tests on such material may or may not have been made. The basis for the certification required by the specification is the classification test of "representative material" cited above, and the "Manufacturer's Quality Assurance System" in ANSI/AWS A5.01.

A5. Ventilation During Welding

A5.1 Five major factors govern the quantity of fumes to which welders and welding operators can be exposed during welding:

(a) Dimensions of the space in which welding is done (with special regard to the height of the ceiling);

(b) Number of welders and welding operators working in that space;

(c) Rate of evolution of fumes, gases, or dusts, according to the materials and processes involved;

(d) The proximity of the welder and welding operators to the fumes as the fumes issue from the welding zone, and to the gases and dusts in the space in which they are working;

(e) The ventilation provided to the space in which the welding is done.

A5.2 American National Standard Z49.1, *Safety in Welding and Cutting* (published by the American Welding Society), discusses the ventilation that is required during welding and should be referred to for details. Attention is drawn particularly to the section entitled Health Protection and Ventilation.

A6. Welding Considerations

A6.1 Welding Considerations for Electrodes

A6.1.1 The casting skin should be removed from the weld area by machining, grinding, chipping or other suitable means. When repairing casting defects, care should be exercised to ensure removal of any defective metal to sound base metal before welding. Also, all oil grease, dirt, or other foreign material should be eliminated by the use of suitable solvents. If oil, grease, or solvents have impregnated the casting, heat should be applied to the area to be welded until volatilization is no longer observed. A temperature of 750°F (400°C) generally is sufficient for this operation. If the casting is too greasy, flash heating the welding surfaces to about 1000°F (540°C) should drive off the grease in a gaseous state.

A6.1.2 For V-groove welds, the edges should be beveled to form a 60 to 80 degree groove angle. For very thick base metal, a U-groove weld with a 20-25 degree groove angle and a groove radius of at least $^{3}/_{16}$ to $^{1}/_{2}$ in. (4.8 to 13 mm) should be used.

A6.1.3 Welding currents should be within the range recommended by the supplier of the electrode, and as low as possible, consistent with smooth operation, good bead contour, and securing good fusion of the groove face. If welding is in other than the flat and horizontal positions, the recommended currents should be reduced to some extent for vertical position and overhead position welding.

A6.1.4 The electrode should be manipulated so that the width of the weld bead is no greater than three times the nominal diameter of the electrode being used. If a large cavity must be filled, the sides may be surfaced, and the cavity gradually filled toward the center of the repaired area.

A6.1.5 When continuous welding is employed, heat input from the previous passes serves as moderate preheating or to maintain the preheat temperature. Use of preheating is not always necessary, but it is often used. In large castings, it may occasionally be found desirable to use intermittent welding to provide a more even temperature distribution, keeping the casting warm to the touch, but not permitting it to get too hot.

A6.1.6 The hardness of the heat-affected zone is a function of the composition and cooling rate of the base metal. An increase in the cooling rate for a given

TABLE A1
TYPICAL MECHANICAL PROPERTIES OF UNDILUTED WELD METAL

Electrode	Tensile Strength ksi	Tensile Strength MPa	Yield Strength 0/2% offset ksi	Yield Strength 0/2% offset MPa	Elongation % in 2 in.	Hardness BHN
RCI	20–25	138–172	...	...	...	150–210
RCI-A	35–40	241–276	...	...	...	225–290
RCI-B (As-welded)	80–90	552–621	70–75	483–517	3–5	220–310
RCI-B (Annealed)	50–60	345–414	40–45	276–310	5–15	150–200
ESt	...	...	...	...	...	250–400
ENi-CI	40–65	276–448	38–60	262–414	3–6	135–218
ENi-CI-A	40–65	276–448	38–60	262–414	3–6	135–218
ENiFe-CI	58–84	400–579	43–63	296–434	6–18	165–218
ENiFe-CI-A	58–84	400–579	43–63	296–434	4–12	165–218
ENiFeMn-CI	75–95	517–655	60–70	414–483	10–18	165–210
ENiFeT3-CI	65–80	448–552	40–55	276–379	12–20	150–165
ERNiFeMn-CI	75–100	517–689	65–80	448–552	15–35	165–210

composition will increase the hardness of the heat-affected zone. Thus, any steps taken to retard the cooling rate such as preheating or the use of insulating material combined with preheating will be beneficial in lowering the hardness of the heat-affected zone. The hardness of the weld metal depends to a great extent upon the amount of dilution, and can be controlled within reasonable limits during welding. Single layer weld metal which has high dilution may have a hardness as high as 350 Brinell for ENiFe-CI, ENiFe-CI-A, and ESt electrodes, and around 210 Brinell for the ENi-CI, ENi,-CI-A, and ENiCu-B weld metal.

Moderately thick weld beads, where the dilution is reduced by directing the arc onto the weld pool, or the later layers of multiple-layer welds, may give lower hardness ranges. Typical ranges for mechanical properties of undiluted filler metal are listed in Table A1.

A6.1.7 Preheating is especially helpful in overcoming the differential mass effect encountered when welding a thick to a thin base metal. The use of preheat in conjunction with welding for pressure tightness also increases the resistance to cracking at the weld interface. Judicious use of preheating when welding cast iron will permit the weld and surrounding area to cool at a more uniform rate.

A6.1.8 Peening often is used to reduce stresses and decrease distortion. Peening should be done with repeated moderate blows of a round-nose or needle tool with sufficient force to move the metal, but not enough to rupture it. Peening should be done while the metal is still above 1000°F (540°C). Peening is not recommended for root beads or weld beads at the weld face.

A6.1.9 The possibility of cracking makes it generally advisable in welding any sizable casting to employ studs that fasten the weld to the unaffected base metal below the weld interface. Studs are usually $\frac{1}{4}$ to $\frac{5}{8}$ in. (6.4 to 16 mm) in diameter, projecting $\frac{3}{16}$ to $\frac{1}{4}$ in. (4.8 to 6.4 mm) above the surface to be welded, and screwed or pressed in to a depth at least equal to their diameter. The cross-sectional area of the studs should be 25 to 35% of the area of the weld surface.

A6.2 Welding Considerations for Rods Classified as RCI and RCI-A

A6.2.1 The casting should be prepared as described in A6.1.1.

A6.2.2 Castings to be welded with a V-groove should have the edges beveled to form a 60 to 90 degree include angle. The groove should have a root face greater than zero, so that there is less difficulty in aligning the joint members and there is no melting through of the entire thickness.

A6.2.3 Next, the casting should be preheated as a whole, or locally in critical sections, if a closed or rigid construction is involved. Ideally this involves preheating the entire casting to 800 to 1050°F (430 to 566°C), or in the case of alloy castings, as high as 1250°F (677°F). The preheating not only tends to equalize expansion and contraction stresses and ensure the machinability of the final weld, but also enables the weld to be made more rapidly. Such preheating

preferably should be done in a charcoal fire or a furnace. In the case of small castings, however, preheating with a welding torch may be employed.

A6.2.4 A neutral oxyfuel gas flame is preferred for welding cast iron. Some authorities, however, recommended the occasional use of a reducing flame where decarburization is to be avoided. A flux is required. The purpose of the flux is to increase the fluidity of the iron silicate slag that forms on the weld pool.

A6.2.5 After the groove has been beveled and cleaned, and the casting preheated, the welding torch is directed over an area extending 1 in. (25 mm) around the weld until the entire area is a dull red. Then the flame is directed at the bottom of the groove, keeping the tip of the cone $\frac{1}{8}$ to $\frac{1}{4}$ in. (3.2 to 6.4 mm) from the metal, until a weld pool approximately 1 in. (25 mm) long has been formed. The flame is then gradually moved from side to side until the groove faces begin to melt into the weld pool. The flame is directed on the rod, and filler metal is added to the weld pool. The groove faces are melted ahead of the advancing pool. The thickness of each layer of weld metal should not exceed $\frac{3}{8}$ in. (9.5 mm).

A6.2.6 In the case of rigid structures requiring extensive machining, it is advisable to stress relieve at the preheat temperature after welding. In any case, the casting should be allowed to cool slowly by furnace cooling, or by covering with, or immersion in, an insulating material such as dry sand.

A6.3 Welding Considerations for RCI-B Rods

A6.3.1 Preparation of castings for welding is similar to that called for in A6.2.1 and A6.2.2. Preheating should be uniform.

A6.3.2 The application of RCI-B welding rods is the same as that described for the other RCI filler metals. The weld zone can withstand higher residual stresses without cracking. However, it is advisable to apply slow cooling to prevent stress cracks in the base metal. It is recommended that residual stress be reduced by preheating castings uniformly to 1600°F (870°C), and providing slow furnace cooling by covering with, or immersion in, an insulating material such as dry sand. After such treatment, the castings will withstand exposure to considerable thermal expansion and will permit heavy machining.

A7. Description and Intended Use of Electrodes and Rods for Welding Cast Iron

The following are guidelines for the application of welding rods and welding electrodes in conjunction with various types of cast iron. These guidelines are general and subject to modification based on the experience of the welder and information supplied by the filler metal manufacturer. Only rods employed in conjunction with an oxyfuel gas heat source, and electrodes intended for the SMAW, GMAW, or FCAW processes are discussed. This limitation, defined in the scope, is not intended to deter a prospective user from considering other welding processes for which these filler metals might prove satisfactory.

A7.1 Cast Iron Welding Rods

A7.1.1 RCI (Cast Iron) Classification

A7.1.1.1 Ordinary machinable gray iron castings may vary from 20 to 40 ksi (140 to 280 MPa) tensile strength, and 150 to 250 Brinell hardness. The use of a gray iron welding rod for oxyfuel gas welding can produce a machinable weld metal of the same color, composition and structure as the base metal. The weld, if properly made, may be as strong as the original casting. See Table A1.

A7.1.1.2 RCI welding rods are used for filling in or building up new or worn castings, and for general fabrication, salvage and repair.

A7.1.2 RCI-A (Cast Iron) Classification

A7.1.2.1 This cast iron welding rod contains small amounts of molybdenum and nickel, which give it a slightly higher melting point than the ordinary cast iron welding rod, RCI. The molten weld metal is more fluid. Welding can be done more rapidly.

A7.1.2.2 The RCI-A welding rod (with a weld metal hardness of approximately 230 Brinell) may be used if an alloy cast iron is being welded, and when greater tensile strength and finer grain structure are desired. The weld metal is generally considered machinable.

A7.1.3 RCI-B (Nodular Cast Iron) Classification. These nodular (ductile) cast iron welding rods are capable of producing sound weld metal when used to weld higher-strength gray iron, malleable, and nodular iron castings with the oxyfuel gas process. Under optimum conditions, the welds produced have mechanical properties of 60 000 psi (410 MPa) minimum ultimate tensile strength; 45 000 psi (310 MPa) minimum yield strength; 5 to 15 percent elongation; and

a maximum Brinell hardness of 200. These mechanical properties are due to the fact that most of the graphite content in the weld metal is in nodular form, which results in good ductility and machining properties for the weld. Color match to the base metal generally is good.

A7.2 Nickel-Base Electrodes for SMAW of Cast Irons. Arc welding with nickel-base covered electrodes is widely employed for welding cast iron. Weld metal made with these electrodes, even without preheating, usually can be machined (the heat affected zone may not be machinable). Welding is fairly rapid when compared to processes such as oxyfuel gas welding. Although welding in the flat position only is required in this specification, some electrodes may be capable of use in other positions. Tensile properties are not specified for the nickel base SMAW electrodes classified in this specification. The tensile and yield strengths may vary widely among manufacturers as shown in Table A1. The filler metal supplier or manufacturer should be contacted for product recommendations.

A7.2.1 ENi-CI (Nickel) Classification. This electrode can be used to join ordinary gray irons to themselves, or to other ferrous and nonferrous materials, and to reclaim or repair castings. Satisfactory welds can be produced on small and medium size castings where the welding stresses are not overly severe, or where the phosphorus content of the iron is not high. Because of lower strength than the ENiFe-CI and lower ductility of the weld metal, these electrodes should be used only in applications where maximum machinability of highly diluted filler metal is necessary. Otherwise, the ENiFe-CI classification is preferred. The ENi-CI classification may also be used on malleable or ductile iron.

A7.2.2 ENi-CI-A (Nickel) Classification. ENi-CI-A electrodes frequently are used interchangeably with ENi-CI electrodes. The covering of ENi-CI electrodes contains more aluminum to improve operating characteristics such as slag coverage and flowability. However, the aluminum becomes an alloy of the weld metal and may affect ductility.

A7.2.3 ENiFe-CI (Nickel-Iron) Classification. This electrode may be used for making repair welds on, as well as for joining, work pieces of various types of cast iron, including nodular iron, and for welding them to steel and some nonferrous base metals. Castings containing phosphorus levels higher than normal (approximately 0.20% phosphorus) are more readily welded using these electrodes than with an electrode of the ENi-CI classification. Experience has shown that satisfactory welds can be made on thick and highly restrained weldments, and on high-strength and engineering grades of cast iron.

A7.2.4 ENiFe-CI-A (Nickel-Iron) Classification. ENiFe-CI-A electrodes frequently are used interchangeably with ENiFe-CI electrodes. The covering of ENiFe-CI-A electrodes contains more aluminum to improve operating characteristics such as slag coverage and flowability. However, the aluminum becomes an alloy of the weld metal and may affect ductility.

A7.2.5 ENiFeMn-CI (Nickel-Iron Manganese) Classification. This electrode has a nominal addition of 12% manganese to the nickel iron system which improves the flow of the molten metal and somewhat increases the crack resistance of the weld metal. The manganese also increases the tensile strength and improves ductility, which provides properties closer to those of the higher strength grades of nodular cast iron base metals than can be achieved with the ENiFe-CI. ENiFeMn-CI electrodes are also used for surfacing to improve wear resistance or for buildup.

A7.2.6 ENiCu-A and ENiCu-B (Nickel-Copper) Classification. These electrodes have been used in many of the same applications as the ENi-Fe-CI, ENiFe-CI-A, and ENiFeMn-CI electrodes. They are used to produce a low depth of fusion weld, since high dilution by the base metal may cause weld cracking.

A7.3 ESt (Steel) Classification for SMAW of Cast Iron

A7.3.1 This covered electrode for all welding positions is designed specifically for the welding of cast iron. It has a low-melting-point covering and differs from the ordinary mild steel electrodes included in ANSI/AWS A5.1, *Specification for Carbon Steel Electrodes for Shielded Metal Arc Welding.* Weld metal from this electrode is not readily machinable.

A7.3.2 Since it is virtually impossible to prevent the formation of a hard zone or layer in the weld metal because of dilution from the base metal, this type of electrode is largely confined to the repair of small pits and cracks, with some application in the repair of castings that require no postweld machining. Since the shrinkage of steel is greater than that of cast iron, high stresses develop as the weld cools. Residual stresses may be severe enough to cause cracking.

A7.3.3 Preheating is employed only when necessary to prevent excessive stresses in other parts of the casting. ESt electrodes generally are used at low amperage to minimize the dilution effect in the fusion zone

and consequent weld and base metal cracking. The usual recommended amperages are 60 to 95 amps for $^{3}/_{32}$ in. (2.4 mm), 80 to 110 amps for $^{1}/_{8}$ in. (3.2 mm), and 110 to 150 amps for $^{5}/_{32}$ in. (4.0 mm) electrodes using dcep (electrode positive) or ac. The beads should be short and widely separated, to distribute the heat, and each bead should be peened lightly. The slag volume is low but very alkaline. Residual slag should be removed completely if the weld area is to be painted.

A7.4 Nickel-Base Filler Metal for GMAW of Cast Iron. Only gas metal arc welding of classifications ERNiFeMn-CI and ERNi-CI are addressed by this specification. The requirements for rods for gas tungsten arc welding and other welding methods have not been included. Since these filler metals could be manufactured as rods, they have been assigned the "ER" designation.

A7.4.1 ERNiFeMn-CI (Nickel-Iron-Manganese) Classification. This solid continuous bare electrode can be used for the same applications as the ENiFeMn-CI covered SMAW electrode. The strength and ductility of this classification makes it suitable for welding the higher strength grades of nodular iron castings.

A7.4.2 ERNi-CI (Nickel) Classification. This solid continuous bare electrode is composed of essentially pure nickel (99%) and contains no deoxidizers. The electrode is used to weld iron castings when weld metal with highly diluted filler metal is to be machined.

A7.4.3 Shielded Gases. Shielding gases should be used as recommended by the manufacturer.

A7.5 Nickel-Base Electrode for FCAW of Cast Iron. The ENiFeT3-CI (nickel-iron electrode) is a continuous flux cored electrode that has been designed to operate without an external shielding gas. For this reason, it is commonly referred to as a self-shielded flux-cored electrode, but it may also be used with an external shielding gas if recommended by the manufacturer. The composition of this classification is similar to that of an ENiFe-CI except for a higher manganese content. It can be used in the same types of applications as the ENiFe-CI electrode. It is generally used for thick base metal or where processes can be automated. This electrode contains 3-5% manganese to aid in resisting weld metal hot cracking and to improve strength and ductility of the weld metal.

TABLE A2
COPPER-BASE WELDING ELECTRODES AND RODS FROM AWS SPECIFICATIONS SUITABLE FOR WELDING CAST IRONS

Classification	Type	Specification
Cast Filler Metals (OFW)		
RBCuZn-A	Naval brass	A5.27
RCuZn-B	Low fuming brass [Ni]	A5.27
RCuZn-C	Low fuming brass	A5.27
RBCuZn-D	Nickel brass	A5.27
Covered Electrodes (SMAW)		
ECuSn-A	Phosphor bronze	A5.6
ECuSn-C	Copper-tin	A5.6
ECuAl-A2	Copper-aluminum	A5.6

GENERAL NOTES:
(a) ANSI/AWS A5.6, Specification for Covered Copper and Copper Alloy Arc Welding Electrodes.
(b) ANSI/AWS A5.27, Specification for Copper and Copper Alloy Rods for Oxyfuel Gas Welding.

A7.6 In addition to the electrodes and rods classified in this specification, a number of copper-base welding rods frequently are used for braze welding cast iron. The lower temperatures associated with depositing these filler metals and their generally low strength and high ductility frequently offers advantages when welding cast iron. Copper-base welding electrodes and rods have been classified in other specifications and are listed in Table A2 for reference purposes.

A.8 Postweld Heat Treatment

Postweld heat treatment may also be used to improve the machineability of the heat-affected zone adjacent to the weld metal. Tempering beads sometimes are employed to achieve the desired improvement. These beads, consisting entirely of filler metal and a previous bead, are made in such a manner that the heat input tempers any martensite present from a previous bead.

SPECIFICATION FOR TITANIUM AND TITANIUM ALLOY WELDING ELECTRODES AND RODS

SFA-5.16

(Identical with AWS Specification A 5.16-90)

1. Scope

This specification prescribes requirements for the classification of titanium and titanium alloy electrodes and rods for gas tungsten arc, gas metal arc, and plasma arc welding.

PART A — GENERAL REQUIREMENTS

2. Classification

2.1 The welding materials covered by this specification are classified according to chemical composition of the filler metal, as specified in Table 1.

2.2 Materials classified under one classification shall not be classified under any other classification of this specification, except that ERTi-1 may be classified also as ERTi-2.

2.3 The filler metals classified under this specification are intended for gas tungsten arc, gas metal arc, and plasma arc welding processes, but that is not to prohibit their use with any other process for which they are found suitable.

3. Acceptance

Acceptance[1] of the material shall be in accordance with the provisions of ANSI/AWS A5.01, *Filler Metal Procurement Guidelines.*[2]

[1] See Section A3 (in the Appendix) for further information concerning acceptance, testing of the material shipped, and A5.01, *Filler Metal Procurement Guidelines.*

[2] AWS standards can be obtained from the American Welding Society, 550 N.W. LeJeune Road, P.O. Box 351040, Miami, Florida 33135.

4. Certification

By affixing the AWS specification and classification designations to the packaging, or the classification to the product, the manufacturer certifies that the product meets the requirements of this specification.[3]

5. Units of Measure and Rounding-Off Procedure

5.1 U.S. Customary Units are the standard units of measure in this specification. The SI Units are given as equivalent values to the U. S. Customary Units. The standard sizes and dimensions in the two systems are not identical, and for this reason, conversion from a standard size or dimension in one system will not always coincide with a standard size or dimension in the other. Suitable conversions, encompassing standard sizes of both, can be made, however, if appropriate tolerances are applied in each case.

5.2 For the purpose of determining conformance with this specification, an observed or calculated value shall be rounded to the "nearest unit" in the last right-hand place of figures used in expressing the limiting value in accordance with the rounding-off method given in ANSI/AWS A1.1, *Metric Practice Guide for the Welding Industry.*

PART B — TESTS, PROCEDURES, AND REQUIREMENTS

6. Summary of Tests

Chemical analysis of the filler metal (or, as an alternative for part of the analysis, the stock from

[3] See A4 (in the Appendix) for further information concerning certification and the testing specified to meet this requirement.

TABLE 1
CHEMICAL COMPOSITION REQUIREMENTS FOR TITANIUM AND TITANIUM ALLOY ELECTRODES AND RODS

AWS Classification		Weight Percent[1] [2] [3] [4]								Other	
1990	1970	UNS Number[5]	Carbon	Oxygen	Hydrogen	Nitrogen	Aluminum	Vanadium	Tin	Iron	Element	Amount
ERTi-1	ERTi-1	R50100	0.03	0.10	0.005	0.015	...	...	...	0.10	...	...
ERTi-2	ERTi-2	R50120	0.03	0.10	0.008	0.020	...	...	...	0.20	...	...
ERTi-3	ERTi-3	R50125	0.03	0.10–0.15	0.008	0.020	...	...	...	0.20	...	...
ERTi-4	ERTi-4	R50130	0.03	0.15–0.25	0.008	0.020	...	...	...	0.30	...	...
ERTi-5	ERTi-6Al-4V	R56400	0.05	0.18	0.015	0.030	5.5–6.7	3.5–4.5	...	0.30	Yttrium	0.005
ERTi-5ELI	ERTi-6Al-4V-1	R56402	0.03	0.10	0.005	0.012	5.5–6.5	3.5–4.5	...	0.15	Yttrium	0.005
ERTi-6	ERTi-5Al-2.5Sn	R54522	0.08	0.18	0.015	0.050	4.5–5.8	...	2.0–3.0	0.50	Yttrium	0.005
ERTi-6ELI	ERTi-5Al-2.5Sn-1	R54523	0.03	0.10	0.005	0.012	4.5–5.8	...	2.0–3.0	0.20	Yttrium	0.005
ERTi-7	ERTi-0.2Pd	R52401	0.03	0.10	0.008	0.020	...	...	...	0.20	Palladium	0.12/0.25
ERTi-9	ERTi-3Al-2.5V	R56320	0.03	0.12	0.008	0.020	2.5–3.5	2.0–3.0	...	0.25	Yttrium	0.005
ERTi-9ELI	ERTi-3Al-2.5V-1	R56321	0.03	0.10	0.005	0.012	2.5–3.5	2.0–3.0	...	0.20	Yttrium	0.005
ERTi-12		R53400	0.03	0.12	0.008	0.020	...	...	...	0.30	Molybdenum	0.2/0.4
											Nickel	0.6/0.9
ERTi-15	ERTi-6Al-2Cb-1Ta-1Mo	R56210	0.03	0.10	0.005	0.015	5.5–6.5	...	...	0.15	Molybdenum	0.5/1.5
											Columbium	1.5/2.5
											Tantalum	0.5/1.5

NOTES:
(1) Titanium constitutes the remainder of the composition.
(2) Single values are maximum.
(3) Analysis of the interstitial elements C, O, H and N shall be conducted on samples of filler metal taken after the filler metal has been reduced to its final diameter and all processing operations have been completed. Analysis of the other elements may be conducted on these same samples or it may have been conducted on samples taken from the ingot or the rod stock from which the filler metal is made. In case of dispute, samples from the finished filler metal shall be the referee method.
(4) Residual elements, total, shall not exceed 0.20 percent, with no single such element exceeding 0.05 percent. Residual elements need not be reported unless a report is specifically required by the purchaser. Residual elements are those elements (other than titanium) that are not listed in Table 1 for the particular classification, but which are inherent in the raw material or the manufacturing practice. Residual elements can be present only in trace amounts and they cannot be elements that have been intentionally added to the product.
(5) SAE/ASTM Unified Numbering Systems for Metals and Alloys.

which the filler metal is made; see Note (3) to Table 1) is the only test required for classification of a product under this specification.

7. Retest

If the results of any test fail to meet the requirement, that test shall be repeated twice. The results of both retests shall meet the requirement. Material for retest may be taken from the original sample or from a new sample. Retest need be only for those specific elements that failed to meet the test requirement.

8. Chemical Analysis

8.1 A sample of the filler metal, or the stock from which it is made (see Section 6, Summary of Test, for limitations), shall be prepared for chemical analysis.

8.2 The sample shall be analyzed by accepted analytical methods. The referee method shall be ASTM E 120, *Standard Methods for Chemical Analysis of Titanium and Titanium-Base Alloys.*[4]

8.3 The results of the analysis shall meet the requirements of Table 1, for the classification of filler metal under test.

PART C — MANUFACTURE, IDENTIFICATION, AND PACKAGING

9. Method of Manufacture

The welding electrodes and rods classified according to this specification may be manufactured by any method that will produce material that meets the requirements of this specification.

10. Standard Sizes

Standard sizes for filler metal in different package forms (straight lengths, coils with or without support, and spools) shall be shown in Table 2.

11. Finish and Uniformity

11.1 All electrodes and rods shall have a smooth finish that is free from slivers, depressions, scratches, scale, seams, laps, and foreign matter that would adversely affect the welding characteristics, the operation of the welding equipment, or the properties of the weld metal.

11.2 Each continuous length of filler metal shall be from a single heat of material, and welds, when present, shall have been made so as not to interfere with uniform, uninterrupted feeding of the filler metal on automatic and semiautomatic equipment.

12. Standard Package Forms

12.1 Standard package forms are straight lengths, coils with support, coils without support, and spools. Standard package dimensions and weights for each form are given in Table 3. Package forms, sizes and weights other than these shall be as agreed between purchaser and supplier.

12.2 The liners in coils with support shall be designed and constructed to prevent distortion of the coil during normal handling and use and shall be clean and dry enough to maintain the cleanliness of the filler metal.

12.3 Spools (Figs. 1 and 2) shall be designed and constructed to prevent distortion of the filler metal during normal handling and use and shall be clean and dry enough to maintain the cleanliness of the filler metal.

13. Winding Requirements

13.1 Filler metal in coils and on spools shall be wound so that kinks, waves, sharp bends, overlapping, or wedging are not encountered, leaving the filler metal free to unwind without restriction. The outside end of the electrode (the end welding is to begin with) shall be identified so it can be located readily and shall be fastened to avoid unwinding. The winding shall be level winding.

13.2 The cast and helix of filler metal in coils and on spools shall be such that the filler metal will feed in an uninterrupted manner in automatic and semiautomatic equipment.

13.2.1 The cast and helix of filler metal on 4 in. (100 mm) spool shall be such that a specimen long enough to produce a single loop, when cut from the spool and laid unrestrained on a flat surface, will do the following:

(a) form a circle not less than 2.5 in. (65 mm) nor more than 9 in. (230 mm) in diameter, and

(b) rise above the flat surface no more than $\frac{1}{2}$ in. (13 mm) at any location.

[4] ASTM standards can be obtained from the American Society for Testing and Materials, 100 Barr Harbor Drive, West Conshohocken, PA 19428-2959.

TABLE 2
STANDARD SIZES[1]

Standard Package Form	Diameter in.	Diameter mm	Tolerance in.	Tolerance mm
Straight lengths,[2] coils with support, coils without support	1/16 (0.062)	1.6	±0.002	±0.05
	5/64 (0.078)	2.0		
	3/32 (0.094)	2.4		
	1/8 (0.125)	3.2		
	5/32 (0.156)	4.0		
	3/16 (0.187)	4.8		
Spools	0.020	0.5	+0.001 −0.002	+0.03 −0.05
	0.030	0.8		
	0.035	0.9		
	0.045	1.2		
	1/16 (0.062)	1.6	±0.002	±0.05

NOTES:
(1) Dimensions, sizes, tolerances, and package forms other than these shall be as agreed to by the purchaser and the supplier.
(2) Length shall be 36 in. ± 1/4 in. (915 mm ± 6 mm).

TABLE 3
STANDARD PACKAGE DIMENSIONS AND WEIGHTS

Filler Metal Size[1] in.	Filler Metal Size[1] mm	Net Weight of Package[1,2] lb.	Net Weight of Package[1,2] kg	Width[3] in.	Width[3] mm	Diameter Inside[4] in.	Diameter Inside[4] mm	Diameter Outside in.	Diameter Outside mm
Straight Lengths									
1/16 through 3/16	1.6 through 4.8	10	4.5	...	...	...	...	...	...
		50	23						
Coils With Support and Coils Without Support									
1/16 through 3/16	1.6 through 4.8	25	11	2 1/2 or 4 5/8	65 or 120	...	...	13 5/8	345
		...	...			12 ± 1/8	305 ± 3	15 1/8	...
		50	23					...	400
		60	27	4 5/8	120	...	...	17 1/2	420
						...			430
						...			
Spools									
0.020 through 1/16	0.5 through 1.6	1	0.5	See Fig. 1		...	...	See Fig. 1	
		5	2.2	See Fig. 2		...	...	See Fig. 2	
		15	6.8	See Fig. 2		...	...	See Fig. 2	

NOTES:
(1) Sizes, dimensions, and weights other than these shall be as agreed to by the purchaser and the supplier.
(2) Actual net weight of the filler metal in each package shall be within 10 percent of the standard net weight shown.
(3) Width of coils and spools.
(4) Inside diameter of the liner for coils with support, and of the coil itself, for coils without support.

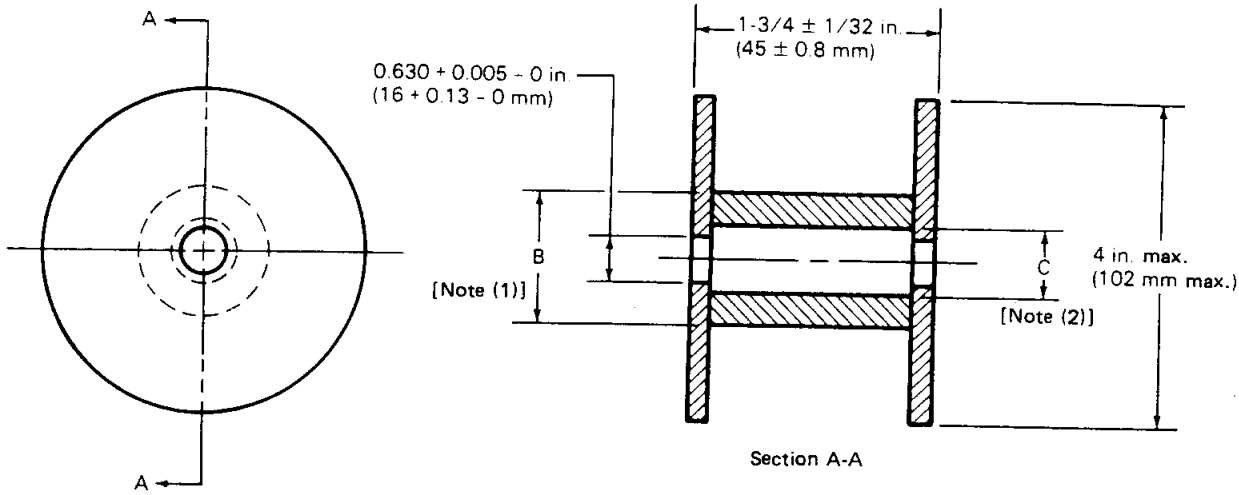

NOTES:
(1) Dimension B, outside diameter of the barrel, shall be such as to permit proper feeding of the filler metals.
(2) Dimension C, inside diameter of the barrel, shall be such that swelling of the barrel or misalignment of the barrel and flanges will not result in the inside diameter of the barrel being less than the inside diameter of the flanges.

FIG. 1 DIMENSIONS OF 4 IN. (100 MM) SPOOL

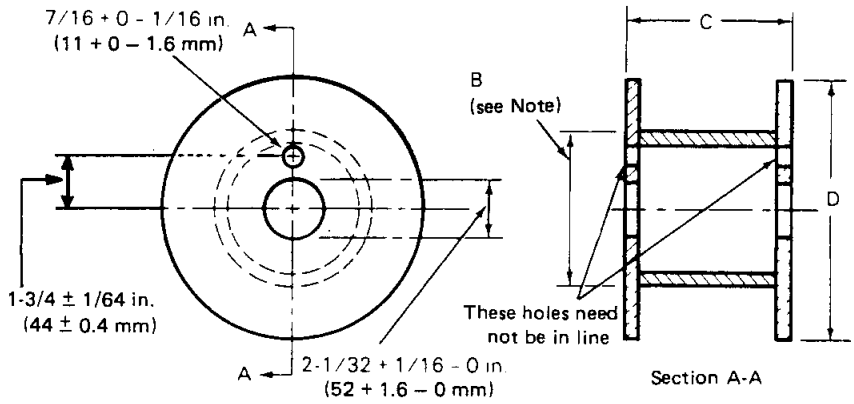

GENERAL NOTES: Dimension B, outside diameter of barrel, shall be such as to permit proper feeding of the filler metals.

FIG. 2 DIMENSIONS OF 8 AND 12 IN. (200 AND 300 MM) SPOOLS

13.2.2 The cast and helix of filler metal on 8 in. (200 mm) spools shall be such that a specimen long enough to produce a single loop, when cut from the spool and laid unrestrained on a flat surface, will do the following:

(a) form a circle not less than 10 in. (250 mm) nor more than 20 in. (510 mm) in diameter, and

(b) rise above the flat surface no more than 3/4 in. (19 mm) at any location.

13.2.3 The cast and helix of filler metal on 12 in. (300 mm) spools shall be such that a specimen long enough to produce a single loop, when cut from the spool and laid unrestrained on a flat surface, will do the following:

(a) form a circle not less than 15 in. (380 mm) nor more than 30 in. (760 mm) in diameter, and

(b) rise above the flat surface no more than 1 in. (25 mm) at any location.

14. Filler Metal Identification

14.1 The product information and the precautionary information required in Section 16, Marking of Packages, shall appear also on each coil and spool.

14.2 Coils without support shall have a tag containing this information securely attached to the filler metal at the inside end of the coil.

14.3 Coils with support shall have the information securely affixed in a prominent location on the support.

14.4 Spools shall have the information securely affixed in a prominent location on the outside of at least one flange of the spool.

15. Packaging

Electrodes and rods shall be suitably packaged to ensure against damage during shipment and storage under normal conditions.

16. Marking of Packages

16.1 The following product information (as a minimum) shall be legibly marked so as to be visible from the outside of each unit package:

(a) AWS specification and classification designations (year of issue may be excluded);

(b) Supplier's name and trade designation;

(c) Size and net weight;

(d) Lot, control, or heat number.

16.2 The following precautionary information (as a minimum) shall be prominently displayed in legible print on all packages of welding material, including individual unit packages enclosed within a larger package.

WARNING:

PROTECT yourself and others.

Read and understand this label.

FUMES AND GASES can be dangerous to your health.

ARC RAYS can injure eyes and burn skin.

ELECTRIC SHOCK can kill.

- Before use, read and understand the manufacturer's instructions, Material Safety Data Sheets (MSDSs), and your employer's safety practices.
- Keep your head out of the fumes.
- Use enough ventilation, exhaust at the arc, or both, to keep fumes and gases away from your breathing zone and the general area.
- Wear correct eye, ear and body protection.
- Do not touch live electrical parts.
- See American National Standard Z49.1, *Safety in Welding and Cutting,* published by the American Welding Society, 550 N.W. LeJeune Road, P.O. Box 351040, Miami, Florida 33135; OSHA Safety and Health Standards, 29 CFR 1910, available from the U.S. Government Printing Office, Washington, DC 20402

DO NOT REMOVE THIS INFORMATION

Appendix
Guide to AWS Specification for Titanium and Titanium Alloy Welding Electrodes and Rods

(This Appendix is not a part of ANSI/AWS A5.16-90, *Specification for Titanium and Titanium Alloy Welding Electrodes and Rods*, but is included for information purposes only.)

A1. Introduction

The purpose of this guide is to correlate the filler metal classifications with their intended applications so the specification can be used effectively. Reference to appropriate base metal specifications is made whenever that can be done and when it would be helpful. Such references are intended only as examples rather than complete listings of the materials for which each filler metal is suitable.

A2. Classification

A2.1 The system for identifying the filler metal classifications in this specification follows the standard pattern used in other AWS filler metal specifications. The letter "E" at the beginning of each classification designation stands for electrode, and the letter "R" stands for welding rod. Since these filler metals are used as electrodes in gas metal arc welding and as rods in gas tungsten arc welding, both letters are used.

A2.2 The chemical symbol"Ti" appears after "R" as a means of identifying the filler metals as unalloyed titanium or a titanium-base alloy. The numeral provides a means of identifying different variations in the composition. The filler letters "ELI" designate titanium alloy filler metals with extra low content of interstitial elements (carbon, oxygen, hydrogen, and nitrogen).

A2.3 Designations for individual alloys in this revision of the specification are different from those used in earlier documents. With the exception of ERTi-15, specific alloys now are identified by a number similar to the grade designation used in ASTM/ASME[5] specifications for corresponding base metals. In the absence of a grade number in general usage for the Ti-6Al-2Cb-1Ta-1Mo alloy, the number 15 was assigned arbitrarily to designate this classification of filler metal. See Tables 1 and A1 for cross reference with the earlier designations.

A2.4 Tables 1 and A1 provide a correlation of the classifications in this revision with those in the previous (1970) revision and with other specifications for titanium alloy filler metals. The Aerospace Materials...ASTM/ASME Specifications listed are also widely used in industry. Table A1 presents a general correlation of the filler metals in these other specifications with those in this AWS specification.

A3. Acceptance

Acceptance of all welding materials classified under this specification is in accordance with ANSI/AWS A5.01, *Filler Metal Procurement Guidelines*, as the Specification states. Any testing a purchaser requires of the supplier, for material shipped in accordance with this specification, needs to be clearly stated in the purchase order, according to the provisions of ANSI/AWS A5.01. In the absence of any such statement in the purchase order, the supplier may ship the material with whatever testing the supplier normally conducts on material of that classification, as specified in Schedule F, Table 1, of the *Filler Metal Procurement Guidelines.* Testing in accordance with any other Schedule in that Table shall be specifically required by the purchase

[5] American Society of Mechanical Engineers, Three Park Avenue, New York, New York 10016-5990.

TABLE A1
SPECIFICATION CROSS INDEX[1]

Filler Metal			Base Metal	
AWS Classification		Aerospace Materials Specification (AMS)	Military Specification (MIL)	ASTM/ASME Grades
1990	1970			
ERTi-1	ERTi-1	4951	MIL-R-81558	1
ERTi-2	ERTi-2	...	MIL-R-81558	2
ERTi-3	ERTi-3	...	MIL-R-81558	3
ERTi-4	ERTi-4	...	MIL-R-81558	4
ERTi-5	ERTi-6Al-4V	4954	...	5
ERTi-5ELI	ERTi-6Al-4V-1	4956	MIL-R-81558	...
ERTi-6	ERTi-5Al-2.5Sn	4953	...	6
ERTi-6ELI	ERTi-5Al-2.5Sn-1	...	MIL-R-81558	...
ERTi-7	ERTi-0.2 Pd	...	...	7
ERTi-9	ERTi-3Al-2.5V	...	...	9
ERTi-9ELI	ERTi-3Al-2.5V-1	...	...	...
ERTi-12	ERTi-0.8Ni-0.3Mo	...	...	12
ERTi-15	ERTi-6Al-2Cb-1Ta-1Mo	...	MIL-R-81558	...

NOTE:
(1) Specifications are not exact duplicates. Information is supplied only for general comparison.

order. In such cases, acceptance of the material shipped shall be in accordance with those requirements.

A4. Certification

The act of placing the AWS specification and classification designations on the packaging enclosing the product or the classification on the product itself, constitutes the supplier's (manufacturer's) certification that the product meets all of the requirements of the specification.

The only testing requirement implicit in this certification is that the manufacturer has actually conducted the test required by the specification on material that is representative of that being shipped and that the material met the requirements of the specification. Representative material, in this case, is any production run of that classification using the same formulation. "Certification" is not to be construed to mean that tests of any kind were necessarily conducted on samples of the specific material shipped. Tests on such material may or may not have been conducted. The basis for the certification required by the specification is the classification test of "representative material" cited above, and the "Manufacturer's Quality Assurance Program" in ANSI/AWS A5.01.

A5. Ventilation During Welding

A5.1 Five major factors govern the quantity of fumes to which welders and welding operators are exposed during welding:

(a) Dimensions of the space in which welding is done (with special regard to the height of the ceiling);

(b) Number of welders and welding operators working in that space;

(c) Rate of evolution of fumes, gases, or dust, according to the materials and processes used;

(d) The proximity of the welders or welding operators to the fumes as the fumes issue from the welding zone, and to the gases and dusts in the space in which they are working;

(e) The ventilation provided to the space in which the welding is done.

A5.2 American National Standard Z49.1, *Safety in Welding and Cutting* (published by the American Welding Society), discusses the ventilation that is required during welding and should be referred to for details. Attention is drawn particularly to the section of that document, entitled "Health Protection and Ventilation."

A6. Welding Considerations

A6.1 Titanium and titanium alloys can be welded by gas tungsten arc, gas metal arc, plasma arc and

electron beam welding processes. Titanium is a reactive metal and is sensitive to embrittlement by oxygen, nitrogen, and hydrogen, at temperatures above 500°F (260°C). Consequently, the metal must be protected from atmospheric contamination. This can be provided by shielding the metal with high purity inert gas in air or in a chamber, or by a vacuum of at least 10^{-4} torr. During arc welding, the titanium should be shielded from the atmosphere until it has cooled below about 800°F (430°C). Adequate protection by auxiliary inert gas shielding can be provided when welding in air, but ventilation and exhaust at the arc should be carried out in such a manner that the protective atmosphere (arc shielding and backing) are not impaired. For critical applications, the welding should be done in a gas tight chamber thoroughly purged of air and filled with high purity inert gas.

A6.2 The titanium metal should be free of thick oxide and chemically clean prior to welding, as contamination from oxide, water, grease, or dirt will also cause embrittlement.

A6.3 Titanium welding rods should be chemically clean and free of heavy oxide, absorbed moisture, grease, and dirt. The welding rod should be kept in the inert gas during welding, and the oxide at the tip, formed upon cooling, should be removed before reusing the rod.

A6.4 Titanium can be successfully fusion welded to zirconium, tantalum, niobium, and vanadium, although the weld metal will be stronger and less ductile than the parent metals. Titanium should not be fusion welded to other commonly welded metals such as copper, iron, nickel, and aluminum, as brittle titanium intermetallic alloys are formed which produce extremely brittle welds.

A7. Description and Intended Use of Titanium and Titanium Alloy Electrodes and Rods

A7.1 ERTi1, ERTi-2, ERTi-3, and ERTi-4. These alloys commonly are referred to as commercially pure (C.P.) titanium with the level of impurities and mechanical properties increasing slightly from ERTi-1 to ERTi-4. C.P. Grade 2 (equivalent to ERTi-2) is the most widely used titanium alloy for industrial applications because of its good balance of strength, formability, and weldability. Typical uses are in seawater and brackish water heat exchangers, chemical process heat exchangers, pressure vessels and piping systems, pulp bleaching systems, air pollution control scrubbers, and electrochemical and chemical storage tank. These grades also have some uses in the aerospace industry.

A7.2 ERTi-5. This alloy is commonly referred to as "6-4" titanium and is probably the most widely used titanium alloy. Its high strength, ability to be heat treated, weldability, excellent fatigue strength, and hardness make this alloy excellent for industrial fans, pressure vessels, aircraft components, compressor blades, and automotive and jet engine parts.

A7.3 ERTi-5ELI. This filler metal is a slightly purer version of ERTi-5 with ELI (Extra Low Interstitial) content, which, in practice, refers primarily to the oxygen content. With special processing, this alloy can develop high fracture toughness. Primary uses are in surgical implants, cryogenic vessels, and airframe components.

A7.4 ERTi-6. This filler metal has good weldability, oxidation resistance, and stability and strength at elevated temperature. Typical uses include gas turbine engine casings, aerospace structural members at elevated temperatures near engines and wing leading edges, and chemical process equipment where high elevated temperature strength is required.

A7.5 ERTi-6ELI. This filler metal is a slightly purer version of ERTi-6 electrodes and rods with extra low interstitials (ELI). They are used to fabricate pressure vessels for liquified gases and other high pressure cryogenic vessels where better ductility and toughness with slightly lower strength are required.

A7.6 ERTi-7. Welds made with electrodes and rods of this classification probably are the most corrosion resistant titanium welds used in industrial applications. Mechanical and physical properties are similar to those of ERTi-2. This alloy extends the use of titanium into mildly reducing media, to much higher chloride levels, or where the environment fluctuates between oxidizing and reducing.

A7.7 ERTi-9. These electrodes and rods often are referred to as "half 6-4" because the major components are roughly half that found in ERTi-5. The primary use, to date, has been in welding hydraulic tubing and fittings for aircraft. Other industrial applications are being developed, particularly where the high strength and ability to maintain strength at elevated temperatures allow for more efficient design of pressure vessels. Corrosion resistance, in most environments appears, to be similar to, or slightly less than, that of weld metal from ERTi-2 electrodes.

A7.8 ERTi-9ELI. The reduced oxygen content of the ERTi-9ELI alloy results in slightly lower strength and improved toughness in comparison with weld metal from ERTi-9 electrodes.

A7.9 ERTi-12. Welds made with this filler metal offer improved corrosion resistance, especially to crevice corrosion in hot brines, and higher strength levels compared to similar welds made using ERTi-2 electrodes and rods. Uses in industrial applications are similar to those of ERTi-2 electrodes and rods, but can be extended to less oxidizing conditions

A7.10 ERTi-15. Welds made with ERTi-15 electrodes and rods have excellent resistance to salt water corrosion combined with good toughness and moderate strength. Typical uses are the fabrication of submersible hulls, pressure vessels, etc., using base material of a matching composition

A8. Special Tests

It is recognized that for certain applications, supplementary tests may be required. In such cases, additional tests to determine specific properties, such as corrosion-resistance, scale-resistance, or strength at elevated temperatures may be required. ANSI/AWS A5.01, *Filler Metal Procurement Guidelines,* provides a means by which such tests can be incorporated into the purchase order.

SPECIFICATION FOR CARBON STEEL ELECTRODES AND FLUXES FOR SUBMERGED ARC WELDING

SFA-5.17

(Identical with AWS Specification A5.17/A5.17M-97.)

1. Scope

This specification prescribes requirements for the classification of carbon steel electrodes (both solid and composite) and fluxes for submerged arc welding.

This document is the first of the A5.17 specifications which is a combined specification providing for classification utilizing a system based upon U.S. Customary Units, or utilizing a system based upon the International System of Units (SI). The measurements are not exact equivalents; therefore, each system must be used independently of the other, without combining values in any way. In selecting rational metric units, ANSI/AWS A1.1, *Metric Practice Guide for the Welding Industry,* is used where suitable. Tables and figures make use of both U.S. Customary Units and SI Units which, with the application of the specified tolerances, provides for interchangeability of products in both U.S. Customary and SI Units.

(a) Paragraphs, tables and figures which carry the suffix letter "U" are applicable only to those products classified to the system based upon U.S. Customary Units under the A5.17 specification.

(b) Paragraphs, tables and figures which carry the suffix letter "M" are applicable only to those products classified to the system based upon the International System of Units (SI), under the A5.17M specification.

(c) Paragraphs, tables and figures which do not have either the suffix letter "U" or the suffix letter "M" are applicable to those products classified under either the U.S. Customary Units System or the International System of Units (SI).

PART A — GENERAL REQUIREMENTS

2. Normative References

2.1 The following ANSI/AWS standards[1] are referenced in the mandatory sections of this document:

(a) ANSI/AWS A1.1, *Metric Practice Guide for the Welding Industry.*

(b) ANSI/AWS A4.3, *Standard Methods for Determination of the Diffusible Hydrogen Content of Martensitic, Bainitic, and Ferritic Steel Weld Metal Produced by Arc Welding.*

(c) ANSI/AWS A5.01, *Filler Metal Procurement Guidelines.*

(d) ANSI/AWS A5.1, *Specification for Carbon Steel Electrodes for Shielded Metal Arc Welding.*

(e) ANSI/AWS B4.0, *Standard Methods for Mechanical Testing of Welds.*

2.2 The following ASTM standards[2] are referenced in the mandatory sections of this document:

(a) ASTM A29/A29M, *Specification for Steel Bars, Carbon and Alloy, Hot-Wrought and Cold-Finished.*

(b) ASTM A36/A36M, *Specification for Carbon Structural Steel.*

(c) ASTM A285/A285M, *Specification for Pressure Vessel Plates, Carbon Steel, Low- and Intermediate-Tensile Strength.*

[1] AWS standards may be obtained from the American Welding Society, 550 N.W. LeJeune Road, Miami, FL 33126.

[2] ASTM standards can be obtained from ASTM, 100 Barr Harbor Drive, West Conshohocken, PA 19428-2959.

(d) ASTM A515/A515M, *Specification for Pressure Vessel Plates, Carbon Steel, for Intermediate- and Higher-Temperature Service.*

(e) ASTM A516/A516M, *Specification for Pressure Vessel Plates, Carbon Steel, for Moderate- and Lower-Temperature Service.*

(f) ASTM DS-56, SAE HS-1086, *Metals and Alloys in the Unified Numbering System.*

(g) ASTM E29, *Practice for Using Significant Digits in Test Data to Determine Conformance with Specifications.*

(h) ASTM E142, *Method for Controlling Quality of Radiographic Testing.*

(i) ASTM E350, *Test Methods for Chemical Analysis of Carbon Steel, Low Alloy Steel, Silicon Electrical Steel, Ingot Iron and Wrought Iron.*

2.3 The following ISO standards[3] are referenced in the mandatory section of this document.

(a) ISO 864, *Arc Welding — Solid and Tubular Cored Wires which Deposit Carbon and Carbon-Manganese Steel — Dimensions of Wires, Spools, Rims and Coils.*

3. Classification

3.1U The welding electrodes and fluxes covered by the A5.17 specification utilize a classification system based upon U.S. Customary Units and are classified according to the following:

(a) The mechanical properties of the weld metal obtained with a combination of a particular flux and a particular classification of electrode, as specified in Tables 5U and 6U.

(b) The condition of heat treatment in which those properties are obtained, as specified in 9.4 (and shown in Fig. 1U).

(c) The chemical composition of the electrode (for solid electrodes) as specified in Table 1, or the weld metal produced with a particular flux (for composite electrodes) as specified in Table 2.

3.1M The welding electrodes and fluxes covered by the A5.17M specification utilize a classification system based upon the International System of Units (SI) and are classified according to the following:

(a) The mechanical properties of the weld metal obtained with a combination of a particular flux and a particular classification of electrode, as specified in Tables 5M and 6M.

[3] ISO standards may be obtained from American National Standards Institute (ANSI), 11 West 42nd St., 13th Floor, New York, NY 10036-8002.

(b) The condition of heat treatment in which those properties are obtained, as specified in 9.4 (and shown in Fig. 1M).

(c) The chemical composition of the electrode (for solid electrodes) as specified in Table 1, or the weld metal produced with a particular flux (for composite electrodes) as specified in Table 2.

3.2 Solid electrodes classified under one classification shall not be classified under any other classification in this specification, except that solid electrodes meeting the chemical composition requirements of both the EL8 and EL12 classifications (Table 1) may be given both classifications. Composite electrodes may be classified under more than one classifications when used with different fluxes. Fluxes may be classified under any number of classifications, for weld metal in either or both the as-welded and postweld heat-treated conditions, using different electrode classifications. Flux-electrode combinations may be classified under A5.17 with U.S. Customary Units, A5.17M using the International System of Units (SI), or both. Flux-electrode combinations classified under both A5.17 and A5.17M must meet all requirements for classification under each system. The classification systems are shown in Figs. 1U and 1M.

3.3 The electrodes and fluxes classified under this specification are intended for submerged arc welding, but that is not to prohibit their use with any other process for which they are found suitable.

4. Acceptance

Acceptance of the electrodes and fluxes shall be in accordance with the provisions of the latest edition of ANSI/AWS A5.01, *Filler Metal Procurement Guidelines* (see Annex A3).

5. Certification

By affixing the AWS specification and classification designations to the packaging or the classification to the product, the manufacturer certifies that the product meets the requirements of this specification (see Annex A4).

6. Units of Measure and Rounding-Off Procedure

6.1 This specification makes use of both U.S. Customary Units and the International System of Units (SI). The measurements are not exact equivalents; therefore,

MANDATORY CLASSIFICATION DESIGNATORS[a]

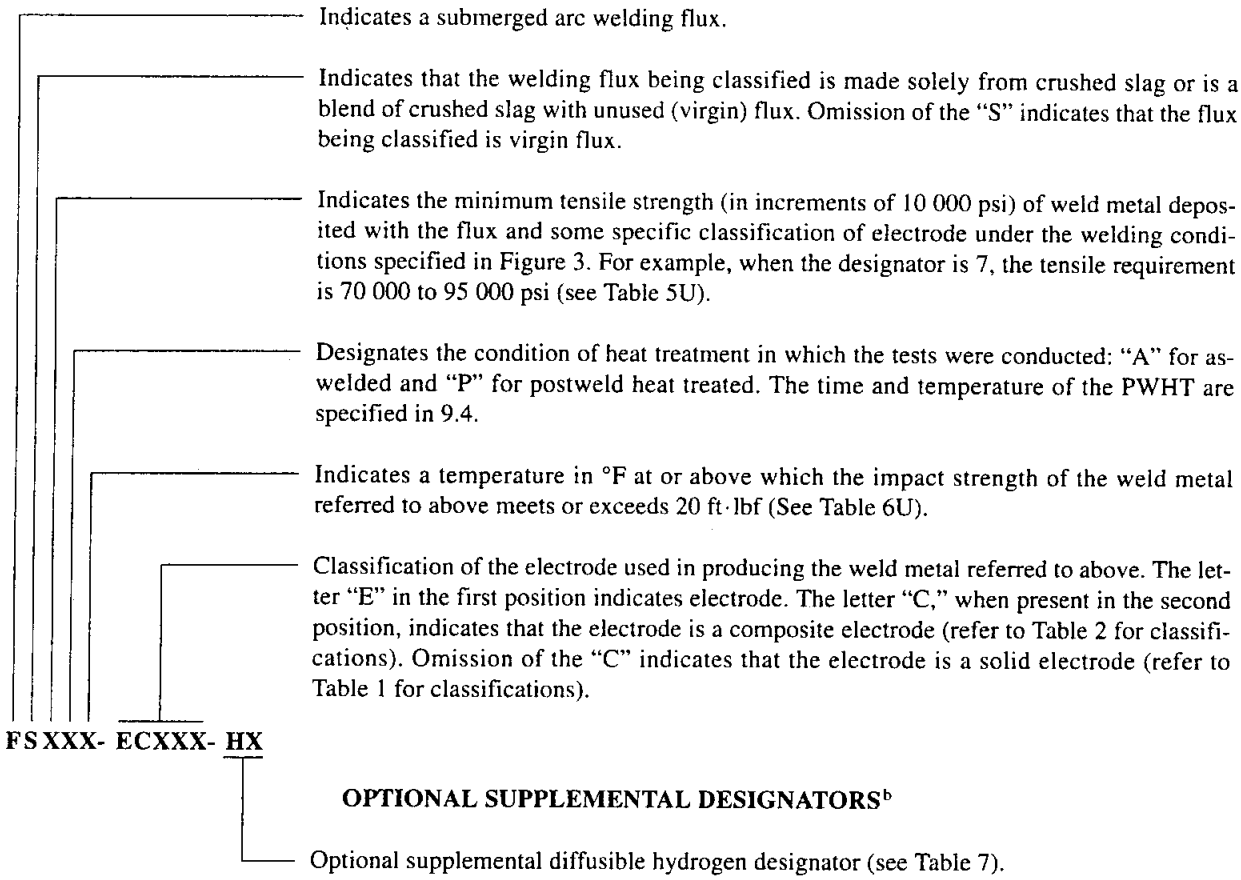

Notes:
(a) The combination of these designators constitutes the flux-electrode classification.
(b) These designators are optional and do not constitute a part of the flux-electrode classification.

Examples

F7A6-EM12K is a complete designation for a flux-electrode combination. It refers to a flux that will produce weld metal which, in the as-welded condition, will have a tensile strength of 70 000 to 95 000 psi and Charpy V-notch impact strength of at least 20 ft·lbf at –60°F when produced with an EM12K electrode under the conditions called for in this specification. The absence of an "S" in the second position indicates that the flux being classified is a virgin flux.

F7P4-EC1 is a complete designation for a flux-composite electrode combination when the trade name of the electrode used in the classification is indicated as well [see 17.4.1(3)]. It refers to a virgin flux that will produce weld metal with that electrode which, in the postweld heat treated condition, will have a tensile strength of 70 000 to 95 000 psi and Charpy V-notch energy of at least 20 ft·lbf at –40° F under the conditions called for in this specification.

FIG. 1U A5.17 CLASSIFICATION SYSTEM FOR U.S. CUSTOMARY UNITS

TABLE 1
CHEMICAL COMPOSITION REQUIREMENTS FOR SOLID ELECTRODES

Electrode Classification	UNS Number[3]	wt. percent[1] [2]						
		C	Mn	Si	S	P	Cu[4]	Ti
Low-Manganese Electrodes								
EL8	K01008	0.10	0.25/0.60	0.07	0.030	0.030	0.35	—
EL8K	K01009	0.10	0.25/0.60	0.10/0.25	0.030	0.030	0.35	—
EL12	K01012	0.04/0.14	0.25/0.60	0.10	0.030	0.030	0.35	—
Medium-Manganese Electrodes								
EM11K	K01111	0.07/0.15	1.00/1.50	0.65/0.85	0.030	0.025	0.35	—
EM12	K01112	0.06/0.15	0.80/1.25	0.10	0.030	0.030	0.35	—
EM12K	K01113	0.05/0.15	0.80/1.25	0.10/0.35	0.030	0.030	0.35	—
EM13K	K01313	0.06/0.16	0.90/1.40	0.35/0.75	0.030	0.030	0.35	—
EM14K	K01314	0.06/0.19	0.90/1.40	0.35/0.75	0.025	0.025	0.35	0.03/0.17
EM15K	K01515	0.10/0.20	0.80/1.25	0.10/0.35	0.030	0.030	0.35	—
High-Manganese Electrodes								
EH10K	K01210	0.07/0.15	1.30/1.70	0.05/0.25	0.025	0.025	0.35	—
EH11K	K11140	0.07/0.15	1.40/1.85	0.80/1.15	0.030	0.030	0.35	—
EH12K	K01213	0.06/0.15	1.50/2.00	0.25/0.65	0.025	0.025	0.35	—
EH14	K11585	0.10/0.20	1.70/2.20	0.10	0.030	0.030	0.35	—
EG				Not Specified				

NOTES:
(1) The electrode shall be analyzed for the specific elements for which values are shown in this table. If the presence of other elements is indicated, in the course of this work, the amount of those elements shall be determined to ensure that their total (excluding iron) does not exceed 0.50 percent.
(2) Single values are maximum.
(3) SAE/ASTM Unified Numbering System for Metals and Alloys.
(4) The copper limit includes any copper coating that may be applied to the electrode.

TABLE 2
CHEMICAL COMPOSITION REQUIREMENTS FOR COMPOSITE ELECTRODE WELD METAL

Electrode Classification	UNS Number[4]	wt. percent[1] [2] [3]					
		C	Mn	Si	S	P	Cu
EC1	W06041	0.15	1.80	0.90	0.035	0.035	0.35
ECG				Not Specified			

NOTES:
(1) The weld metal shall be analyzed for the specific elements for which values are shown in this table. If the presence of other elements is indicated, in the course of this work, the amount of those elements shall be determined to ensure that their total (excluding iron) does not exceed 0.50 percent.
(2) Single values are maximum.
(3) As a substitute for the weld pad in Figure 2, the sample for chemical analysis may be taken from the reduced section of the fractured tension test specimen (see 12.1) or from a corresponding location (or any location above it) in the weld metal in the groove weld in Figure 3. In case of dispute, the weld pad shall be the reference method.
(4) SAE/ASTM Unified Numbering System for Metals and Alloys.

MANDATORY CLASSIFICATION DESIGNATORS[a]

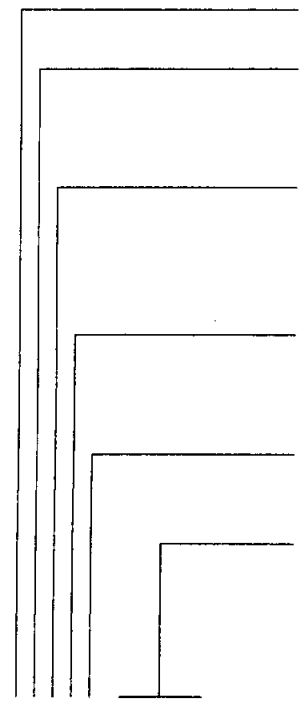

Indicates a submerged arc welding flux.

Indicates that the welding flux being classified is made solely from crushed slag or is a blend of crushed slag with unused (virgin) flux. Omission of the "S" indicates that the flux being classified is virgin flux.

Indicates the minimum tensile strength [in increments of 10 megapascals (MPa)] of weld metal deposited with the flux and some specific classification of electrode under the welding conditions specified in Figure 3. For example, when this designator is 43, the tensile requirement is 430 to 560 MPa (see Table 5M).

Designates the condition of heat treatment in which the tests were conducted: "A" for as-welded and "P" for postweld heat treated. The time and temperature of the PWHT are specified in 9.4.

Indicates a temperature in °C at or above which the impact strength of the weld metal referred to above meets or exceeds 27 J (See Table 6M).

Classification of the electrode used in producing the weld metal referred to above. The letter "E" in the first position indicates electrode. The letter "C," when present in the second position, indicates that the electrode is a composite electrode (refer to Table 2 for classifications). Omission of the "C" indicates that the electrode is a solid electrode (refer to Table 1 for classifications).

OPTIONAL SUPPLEMENTAL DESIGNATORS[b]

Optional supplemental diffusible hydrogen designator (see Table 7).

Notes:
(a) The combination of these designators constitutes the flux-electrode classification.
(b) These designators are optional and do not constitute a part of the flux-electrode classification.

Examples

F43A2-EM12K is a complete designation for a flux-electrode combination. It refers to a flux that will produce weld metal which, in the as-welded condition, will have a tensile strength of 430 to 560 MPa and Charpy V-notch impact strength of at least 27 J at –20 °C when produced with an EM12K electrode under the conditions called for in this specification. The absence of an "S" in the second position indicates that the flux being classified is a virgin flux.

F48P6-EC1 is a complete designation for a flux-composite electrode combination when the trade name of the electrode used in the classification is indicated as well [see 17.4.1(3)]. It refers to a virgin flux that will produce weld metal with that electrode which, in the postweld heat treated condition, will have a tensile strength of 480 to 660 MPa and Charpy V-notch energy of at least 27 J at –60 °C under the conditions called for in this specification.

FIG. 1M A5.17M CLASSIFICATION SYSTEM FOR THE INTERNATIONAL SYSTEM OF UNITS (SI)

TABLE 3
TESTS REQUIRED FOR CLASSIFICATION

AWS Classification	Chemical Analysis		Radiographic Test	Tension Test	Impact Test	Diffusible Hydrogen Test
	Electrode	Weld Metal				
All Solid Electrodes	Required	Not Required	Not Required	Not Required	Not Required	Not Required
All Composite Electrodes	Not Required	Required	Not Required	Not Required	Not Required	Not Required
All Flux-Solid Electrode Combinations	Not Required	Not Required	Required	Required	Required[a]	[b]
All Flux-Composite Electrode Combinations	Not Required	Not Required	Required	Required	Required[a]	[b]

NOTES:
a. When the "Z" impact designator (no impact requirement — Table 6U and 6M) is used, the Impact Test is not required.
b. Diffusible hydrogen test is required only when specified by the purchaser or when the manufacturer puts the diffusible hydrogen designator on the label (see also Section A3 and A6.4 in the Annex).

each system must be used independently of the other without combining in any way. The specification with the designation A5.17 uses U.S. Customary Units. The specification with the designation A5.17M uses SI Units. The latter are shown in appropriate columns in the tables or figures or are shown within brackets [] when used in the text. Figures in parentheses (), following the U.S. Customary Units, are calculated equivalent SI values for the specified dimensions. Figures in brackets [], following U.S. Customary Units used in the text, are rational SI Units.

6.2 For the purpose of determining conformance with this specification, an observed or calculated value shall be rounded to the nearest 1000 psi for tensile and yield strength for A5.17 [to the nearest 10 MPa for tensile and yield strength for A5.17M] and to the nearest unit in the last right-hand place of figures used in expressing the limiting values for other quantities in accordance with the rounding-off method given in ASTM E29, *Practice for Using Significant Digits in Test Data to Determine Conformance with Specifications.*

PART B — TESTS, PROCEDURES, AND REQUIREMENTS

7. Summary of Tests

The tests required for classification of solid electrodes, composite electrodes, and flux-electrode combinations are specified in Table 3.

7.1 Electrodes

7.1.1 Solid Electrodes. Chemical analysis of the electrode is the only test required for classification of a solid electrode under this specification. The chemical analysis of the rod stock from which the electrode is made may also be used, provided the electrode manufacturing process does not alter the chemical composition.

7.1.2 Composite Electrodes. Chemical analysis of weld metal produced with the composite electrode and a particular flux is the only test required for classification of a composite electrode under this specification.

7.2 Fluxes. The tests specified in Table 3 determine the mechanical properties and soundness of the weld metal obtained with a particular flux-electrode combination. The base metal for the test assemblies, the welding and testing procedures to be employed, and the results required are given in Sections 9 through 13.

7.3 Flux classification is based upon a $^{5}/_{32}$ in. [4.0 mm] electrode size as standard. If this size electrode is not manufactured, the closest size shall be used for classification tests. See Note d of Fig. 3B.

8. Retest

If the results of any test fail to meet the requirement, that test shall be repeated twice. The results of both retests shall meet the requirement. Material, specimens, or samples for retest may be taken from the original test assembly or sample or from one or two new test assemblies or samples. For chemical analysis, retest need be only for those specific elements that failed to meet the test requirement. If the results of one or both retests fail to meet the requirement, the material under test shall be considered as not meeting the requirements of this specification for that classification.

In the event that, during preparation or after completion of any test, it is clearly determined that prescribed or proper procedures were not followed in preparing the weld test assembly or test specimen(s) or in conducting the test, the test shall be considered invalid, without regard to whether the test was actually completed or whether test results met, or failed to meet, the requirement. That test shall be repeated, following proper prescribed procedures. In this case, the requirement for doubling the number of test specimens does not apply.

9. Weld Test Assemblies

9.1 Requirements for Classification

9.1.1 Classification of Solid Electrodes. No weld test assembly is required for classification of solid electrodes.

9.1.2 Classification of Composite Electrodes. The chemical analysis of weld metal produced with the composite electrode and a particular flux is required for classification of a composite electrode under this specification. The weld test assembly, shown in Fig. 2, is used to meet this requirement for the classification of composite electrodes. Figure 2 is the weld pad test assembly for chemical analysis of weld metal. As an alternative to the weld pad, the sample for chemical analysis of composite electrode weld metal may be taken from the groove weld in Fig. 3A. Note c to Table 2 allows the sample for chemical analysis in the case of a composite electrode to be taken from the reduced section of the fractured tension test specimen of Fig. 5 or from a corresponding location (or any location above it) in the weld metal in the groove weld in Fig. 3A. In case of dispute, the weld pad shall be the referee method.

9.1.3 Classification of Flux-Electrode Combinations. One groove weld test assembly is required for each classification of a flux-solid electrode combination or a flux-composite electrode combination. This is the groove weld in Fig. 3A for mechanical properties and soundness of weld metal.

9.2 Preparation. Preparation of each weld test assembly shall be as prescribed in 9.3 and 9.4. The base metal for the weld pad and groove weld assemblies shall be as required in Table 4 corresponding to the tests to be conducted and shall meet the requirements of the appropriate ASTM specification shown in Table 4, or an equivalent specification. Testing of the assemblies shall be as prescribed in Sections 10 through 13.

9.3 Weld Pad. For composite electrodes only, a weld pad shall be prepared as specified in Fig. 2, except when either alternative in 9.1.2 is selected. Base metal of any convenient size, and of the type specified in Table 4, shall be used as the base metal for the weld pad. The surface of the base metal on which the filler metal is deposited shall be clean. The pad shall be welded in the flat position, three passes per layer, four layers high, using the flux for which classification of the composite electrode is intended. The preheat temperature shall not be less than 60°F [15°C] and the interpass temperature shall not exceed 325°F [165°C]. The slag shall be removed after each pass. The pad may be quenched in water between passes but shall be dry before the start of each pass. Testing of this assembly shall be as specified in Section 10, Chemical Analysis.

9.4 Groove Weld for Mechanical Properties and Soundness. For classification of a flux-electrode combination, a test assembly shall be prepared and welded as specified in Fig. 3A using base metal of the appropriate type specified in Table 4. Prior to welding, the assembly may be preset so that the welded joint will be sufficiently flat to facilitate removal of the test specimens. As an alternative, restraint or a combination of restraint and presetting may be used to keep the welded joint within 5 degrees of plane. A welded test assembly that is more than 5 degrees out of plane shall be discarded. Straightening of the test assembly is prohibited. Testing shall be as specified in Sections 10 through 13, with the assembly in either the as-welded or the postweld heat-treated condition, according to the classification of the weld metal (See Figs. 1U and 1M).

When the tests are to be conducted in each condition (as-welded and postweld heat treated), two such assemblies, or one single assembly of sufficient length to provide the specimens required for both conditions, shall be prepared. In the latter case, the single assembly shall be cut transverse to the weld into two pieces; one of the pieces shall be tested in the as-welded condition, and the other piece shall be heat treated prior to testing.

Any test assembly to be heat treated shall be heat treated at 1150 ± 25°F [620 ± 15°C] for one hour (–0, +15 minutes). The furnace shall be at a temperature not higher than 600°F [315°C] when the test assembly is placed in it. The heating rate, from that point to the 1150 ± 25°F [620 ± 15°C] holding temperature, shall not exceed 400°F per hour [220°C per hour]. When the holding time has been completed, the assembly shall be allowed to cool in the furnace to a temperature

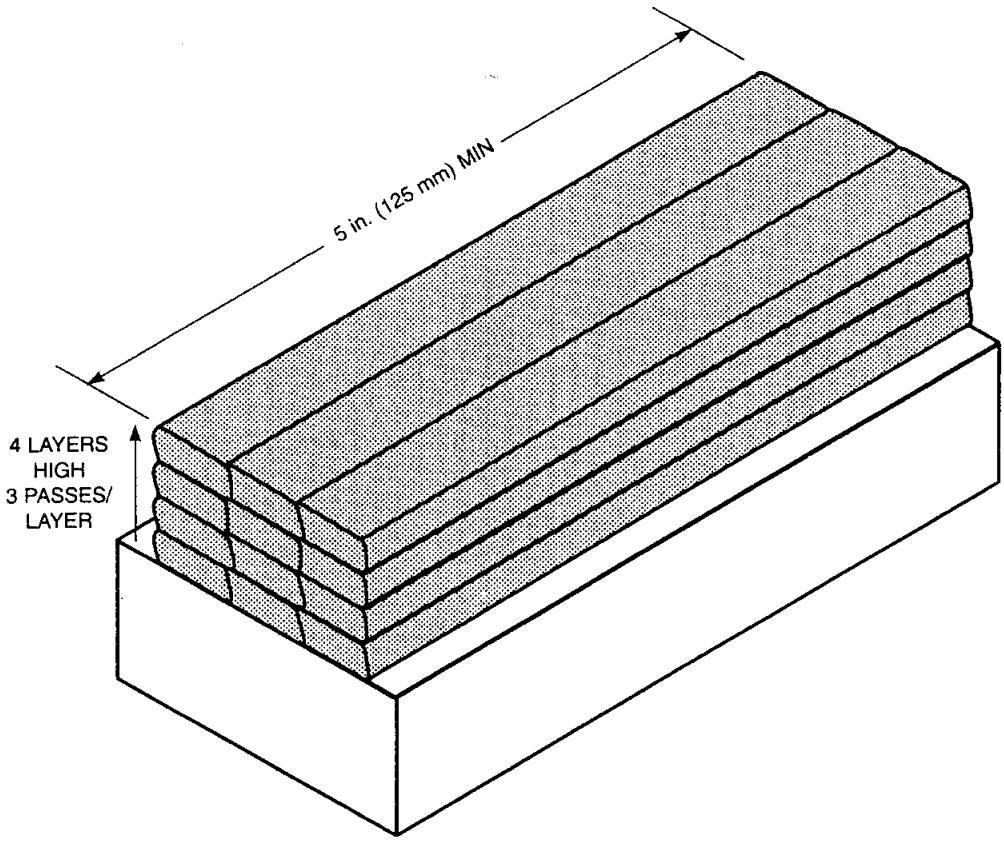

GENERAL NOTES:
(1) Width and thickness of the base-metal plate may be any dimensions suitable for the electrode diameter and current in use.
(2) Weld beads shall be deposited without oscillation. The welding conditions shall be in accordance with the manufacturer's recommendations.
(3) The first and last 2 in. [50 mm] of the weld length shall be discarded. The top surface shall be removed, and chemical analysis samples shall be taken from the underlying metal of the fourth layer of the weld pad.

FIG. 2 WELD PAD FOR CHEMICAL ANALYSIS OF WELD METAL

below 600°F [315°C] at a rate not exceeding 350°F per hour [195°C per hour]. The assembly may be removed from the furnace at any temperature below 600°F [315°C] and allowed to cool in still air, to room temperature.

9.5 Diffusible Hydrogen. In those cases in which an optional supplemental diffusible hydrogen designator is to be added to the flux-electrode classification designation, four diffusible hydrogen test assemblies shall be prepared, welded, and tested as specified in Section 14, Diffusible Hydrogen Test.

10. Chemical Analysis

10.1 For solid electrodes, a sample of the electrode shall be prepared for chemical analysis. The rod stock from which the electrode is made may also be used for chemical analysis, provided the electrode manufacturing process does not alter the chemical composition. Solid electrodes, when analyzed for elements that are present in a coating (copper flashing, for example), shall be analyzed without removing the coating. When the electrode is analyzed for elements other than those in the coating, the coating shall be removed if its presence affects the results of the analysis for other elements. Rod stock may be analyzed prior to coating for those elements not added in the coating. In this case, the analysis of the elements in the electrode coating must be made on the finished electrode.

10.2 Composite electrodes shall be analyzed in the form of weld metal. The sample for analysis shall be taken from weld metal obtained with the electrode and the flux with which it is classified. The sample shall come from the weld pad in Fig. 2, from the reduced

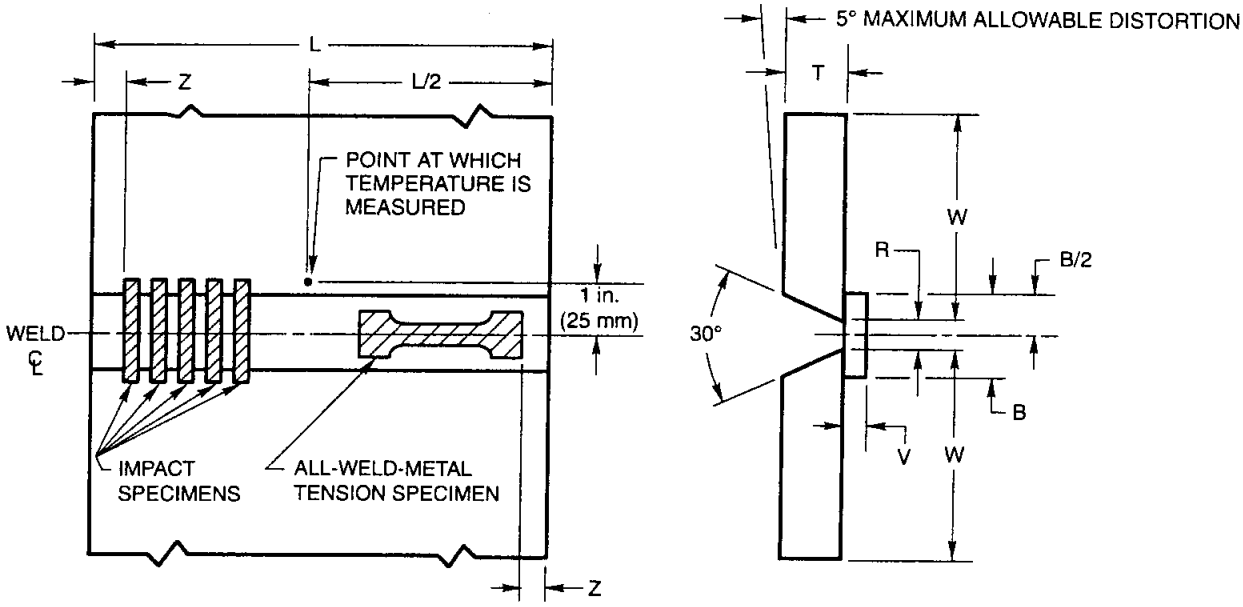

(A) JOINT CONFIGURATION AND LOCATION OF TEST SPECIMENS

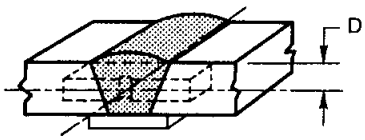

(B) LOCATION OF IMPACT TEST SPECIMENS

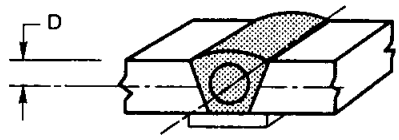

(C) LOCATION OF ALL-WELD-METAL TENSION TEST SPECIMEN

Letter	Dimensions	in.	mm
L	Length (min)	12	305
T	Thickness	1 ± 1/16	25 ± 1.5
W	Width (min)	5	127
V	Backup Thickness	1/2 ± 1/16	13 ± 1.5
D	Specimen Center	3/8 ± 1/32	9.5 ± 1.0
B	Backup Width (min)	2	50
R	Root Opening	1/2 ± 1/16	13 ± 1.5
Z	Discard (min)	1	25

FIG. 3A GROOVE WELD TEST ASSEMBLY

Welding Conditions for Solid Electrodes[a,b,c]

Electrode Size[d]		Welding Current (Amperes)[f]	Arc Voltage (Volts)	Electrode Extension[g]		Travel Speed		Current Type[h]	Preheat Temperature[i]	Interpass Temperature[i]
in.	mm[e]			in.	mm	ipm (±1)	mm/sec. (±0.5)			
1/16	1.6	250 to 350	26 to 29	1/2 to 3/4	13 to 19	12	5.0	A.C. or D.C. either polarity	60–325°F [15–165°C]	275–325°F [135–165°C]
5/64	2.0	300 to 400	26 to 29	1/2 to 3/4	13 to 19	13	5.5			
3/32	2.4	350 to 450	27 to 30	3/4 to 1-1/4	19 to 32	14	6.0			
—	2.5	350 to 450	27 to 30	3/4 to 1-1/4	19 to 32	14	6.0			
7/64	2.8	400 to 500	27 to 30	3/4 to 1-1/4	19 to 32	14	6.0			
—	3.0	400 to 500	27 to 30	1 to 1-1/2	25 to 38	15	6.5			
1/8	3.2	425 to 525	27 to 30	1 to 1-1/2	25 to 38	15	6.5			
5/32	4.0	475 to 575	27 to 30	1 to 1-1/2	25 to 38	16	7.0			
3/16	4.8	525 to 625	27 to 30	1 to 1-1/2	25 to 38	17	7.0			
—	5.0	550 to 650	27 to 30	1 to 1-1/2	25 to 38	17	7.0			
7/32	5.6	575 to 675	28 to 31	1-1/4 to 1-3/4	32 to 44	18	7.5			
—	6.0	625 to 725	28 to 31	1-1/4 to 1-3/4	32 to 44	19	8.0			
1/4	6.4	700 to 800	28 to 32	1-1/2 to 2	38 to 50	20	8.5			

NOTES:

(a) Values specified in inches or ipm apply to A5.17. Values specified in mm or mm/sec apply to A5.17M.

(b) These welding conditions are intended for machine or automatic welding with straight progression (no weaving). Welding shall be performed in the flat position. The first layer shall be produced in either 1 or 2 passes. All other layers shall be produced in 2 or 3 passes per layer except the last, which shall be produced in 3 or 4 passes. The completed weld shall be at least flush with the surface of the test plate.

(c) Welding conditions for composite electrodes shall be as agreed between purchaser and supplier.

(d) Classification is based on the properties of weld metal with $^{5}/_{32}$ in. [4.0 mm] electrodes or the closest size manufactured, if $^{5}/_{32}$ in. [4.0 mm] is not manufactured. The conditions given above for sizes other than $^{5}/_{32}$ in. [4.0 mm] are to be used when classification is based on those sizes, or when they are required for lot acceptance testing under A5.01, *Filler Metal Procurement Guidelines* (unless other conditions are specified by the purchaser).

(e) 4.8 mm, 5.6 mm, and 6.4 mm are not included as standard sizes in ISO 864:1988.

(f) Lower currents may be used for the first layer.

(g) The electrode extension is the contact tube-to-work distance. When an electrode manufacturer recommends a contact tube-to-work distance outside the range shown, that recommendation shall be followed $\pm^{1}/_{4}$ in. [6.5 mm].

(h) In case of dispute, DCEP (direct current-electrode positive) shall be used as the referee current.

(i) The first bead shall be produced with the assembly at any temperature between 60 and 325°F [15 to 165°C]. Welding shall continue, bead by bead, until a temperature within the interpass temperature range has been attained. Thereafter, production of subsequent beads may begin only when the assembly is within the interpass temperature range. The point of temperature measurement shall be at the mid-length of the test assembly, approximately 1 in. [25 mm] from the weld centerline.

FIG. 3B GROOVE WELD TEST WELDING PARAMETERS

TABLE 4
BASE METALS FOR TEST ASSEMBLIES

Test Assembly	Type	ASTM Specification[1]	UNS Number[2]
Weld Pad for Chemical Analysis	Carbon Steel	A29 Grade 1015	G10150
		A29 Grade 1020	G10200
		A36	K02600
		A285 Grade A	K01700
		A285 Grade B	K02200
		A285 Grade C	K02801
		A285 Grade D	K02702
		A515 Grade 70	K03101
		A516 Grade 70	K02700
Groove Weld of Figure 3	Carbon Steel	A36	K02600
		A285 Grade A	K01700
		A285 Grade B	K02200
		A285 Grade C	K02801
		A285 Grade D	K02702
		A515 Grade 70	K03101
		A516 Grade 70	K02700

NOTES:
(1) Chemically equivalent steel may be used. In case of dispute, ASTM A36 shall be used as the referee steel.
(2) As classified in ASTM DS-56, SAE HS-1 Metals and Alloys in the Unified Numbering System.

section of the fractured tension test specimen (see 12.1), or from a corresponding location (or any location above it) in the weld metal in the groove weld in Fig. 3A. In case of dispute, the weld pad shall be the referee method.

The top surface of the pad described in 9.3 and shown in Fig. 2 shall be removed and discarded, and a sample for analysis shall be obtained from the underlying metal of the fourth layer of the weld pad by any appropriate mechanical means. The sample shall be free of slag.

The alternatives to the weld pad outlined above and in 9.1.2 shall be prepared for analysis by any appropriate mechanical means.

10.3 The sample shall be analyzed by accepted analytical methods. The referee method shall be the procedure in the latest edition of ASTM E350, *Testing Methods for Chemical Analysis of Carbon Steel, Low-Alloy Steel, Silicon Electrical Steel, Ingot Iron, and Wrought Iron.*

10.4 The results of the analysis shall meet the requirements of Table 1 or 2, as applicable, for the classification of electrode under test.

11. Radiographic Test

11.1 The groove weld described in 9.4 and shown in Fig. 3A shall be radiographed to evaluate the soundness of the weld metal. In preparation for radiography, the backing shall be removed, and both surfaces of the weld shall be machined or ground smooth and flush with the original surfaces of the base metal. Both surfaces of the test assembly, in the area of the weld, shall be smooth enough to avoid difficulty in interpreting the radiograph.

11.2 The weld shall be radiographed in accordance with ASTM E142, *Method for Controlling Quality of Radiographic Testing.* The quality level of inspection shall be 2-2T.

11.3 The soundness of the weld metal meets the requirements of this specification if the radiograph shows the following:

(a) No cracks, no incomplete fusion, and no incomplete penetration

(b) No slag inclusions longer than $^5/_{16}$ in. [8 mm] or no groups of slag inclusions in line that have an aggregate length greater than 1 in. [25 mm] in a 12 in. [300 mm] length except when the distance between the successive inclusions exceeds 6 times the length of the longest inclusion in the group, and

(c) No rounded indications in excess of those permitted by the radiographic standards in Fig. 4

In evaluating the radiograph, 1 in. [25 mm] of the weld on each end of the test assembly shall be disregarded.

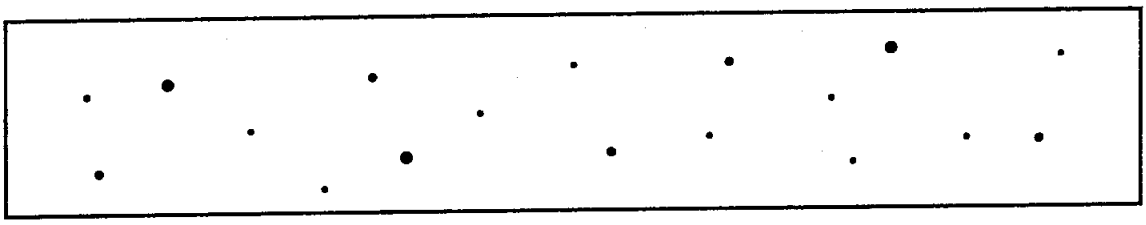

(A) ASSORTED ROUNDED INDICATIONS

SIZE PERMITTED IS 1/64 in. [0.4 mm] TO 1/16 in. [1.6 mm]
NUMBER PERMITTED IN ANY 6 in. [150 mm] OF WELD = 18,
WITH THE FOLLOWING RESTRICTIONS:

LARGE:	3/64 in. [1.2 mm] TO 1/16 in. [1.6 mm] =	3 PERMITTED.
MEDIUM:	1/32 in. [0.8 mm] TO 3/64 in. [1.2 mm] =	5 PERMITTED.
SMALL:	1/64 in. [0.4 mm] TO 1/32 in. [0.8 mm] =	10 PERMITTED.

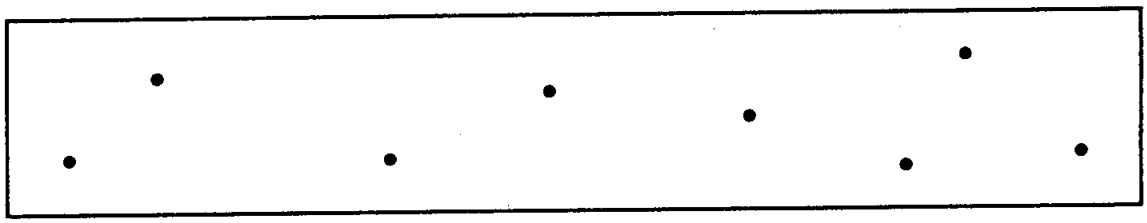

(B) LARGE ROUNDED INDICATIONS

SIZE PERMITTED IS 3/64 in. [1.2 mm] TO 1/16 in. [1.6 mm]
NUMBER PERMITTED IN ANY 6 in. [150 mm] OF WELD = 8.

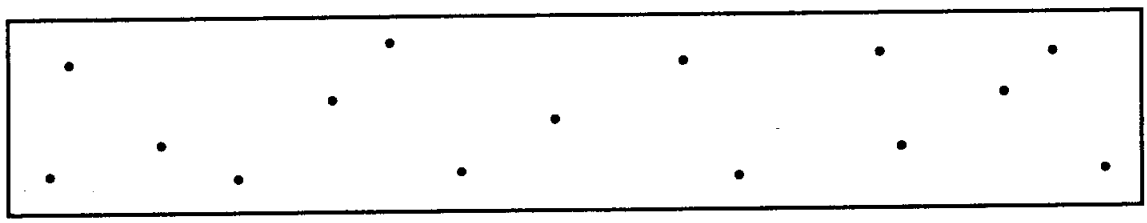

(C) MEDIUM ROUNDED INDICATIONS

SIZE PERMITTED IS 1/32 in. [0.8 mm] TO 3/64 in. [1.2 mm]
NUMBER PERMITTED IN ANY 6 in. [150 mm] OF WELD = 15.

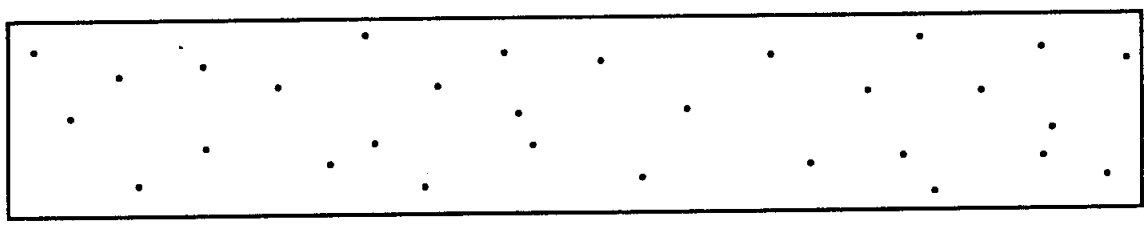

(D) SMALL ROUNDED INDICATIONS

SIZE PERMITTED IS 1/64 in. [0.4 mm] TO 1/32 in. [0.8 mm]
NUMBER PERMITTED IN ANY 6 in. [150 mm] OF WELD = 30.

NOTES:
(1) The chart which is most representative of the size of the rounded indications in the radiograph of the test assembly shall be used for determination of conformance with this specification. Rounded indications smaller than $^{1}/_{64}$ in. [0.4 mm] shall be disregarded. The largest dimension of the indication (including any tail) is the size of the indication.
(2) These radiographic requirements are for test welds made in the laboratory specifically for classification purposes. They are more restrictive than those usually encountered in general fabrication. They are equivalent to the Grade 1 standards of ANSI/AWS A5.1, *Specification for Carbon Steel Electrodes for Shielded Metal Arc Welding.*

FIG. 4 RADIOGRAPHIC STANDARDS FOR ROUNDED INDICATION

TABLE 5U
A5.17 TENSION TEST REQUIREMENTS

Flux-Electrode Classification[1]	Tensile Strength, psi	Yield Strength,[2] psi	Elongation,[2] %
F6XX-EXXX	60 000–80 000	48 000	22
F7XX-EXXX	70 000–95 000	58 000	22

NOTES:
(1) The letter "S" will appear after the "F" as part of the classification designation when the flux being classified is a crushed slag or a blend of crushed slag with unused (virgin) flux. The letter "C" will appear after the "E" as part of the classification designation when the electrode being classified is a composite electrode. The letter "X" used in various places in this table stands for, respectively, the condition of heat treatment, the toughness of the weld metal, and the classification of the electrode. See Figure 1U for a complete explanation of the classification designators.
(2) Minimum requirements. Yield strength at 0.2 percent offset and elongation in 2 in. gage length.

TABLE 5M
A5.17M TENSION TEST REQUIREMENTS

Flux-Electrode Classification[1]	Tensile Strength, MPa	Yield Strength,[2] MPa	Elongation,[2] %
F43XX-EXXX	430–560	330	22
F48XX-EXXX	480–660	400	22

NOTES:
(1) The letter "S" will appear after the "F" as part of the classification designation when the flux being classified is a crushed slag or a blend of crushed slag with unused (virgin) flux. The letter "C" will appear after the "E" as part of the classification designation when the electrode being classified is a composite electrode. The letter "X" used in various places in this table stands for, respectively, the condition of heat treatment, the toughness of the weld metal, and the classification of the electrode. See Figure 1M for a complete explanation of the classification designators.
(2) Minimum requirements. Yield strength at 0.2 percent offset and elongation in 51 mm gage length.

11.3.1 A rounded indication is an indication (on the radiograph) whose length is no more than 3 times its width. Rounded indications may be circular, or irregular in shape, and they may have tails. The size of a rounded indication is the largest dimension of the indication, including any tail that may be present.

11.3.2 Indications whose largest dimension does not exceed $^1/_{64}$ in. [0.4 mm] shall be disregarded. Test assemblies with indications larger than the large indications permitted in the radiographic standards do not meet the requirements of this specification.

12. Tension Test

12.1 One all-weld-metal standard round tensile specimen, as specified in the Tension Tests section of ANSI/AWS B4.0, *Standard Methods for Mechanical Testing of Welds*, shall be machined from the groove weld described in 9.4 and shown in Fig. 3A. The tensile specimen shall have a nominal diameter of 0.500 in. [12.5 mm] and a nominal gage length-to-diameter ratio of 4:1.

12.2 The specimen shall be tested in the manner described in the tension test section of the latest edition of ANSI/AWS B4.0, *Standard Methods for Mechanical Testing of Welds.*

12.3 The results of the tension test shall meet the requirements specified in Table 5U or Table 5M, as applicable.

13. Impact Test

13.1 For those classifications for which impact testing is specified in Table 3, five Charpy V-notch impact specimens, as specified in the Fracture Toughness Testing of Welds section of ANSI/AWS B4.0, shall be machined from the test assembly shown in Fig. 3A.

The Charpy V-notch specimens shall have the notched surface and the surface to be struck parallel within 0.002 in. [0.05 mm]. The other two surfaces shall be square with the notched or struck surface within ±10 minutes of a degree. The notch shall be smoothly cut by mechanical means and shall be square with the longitudinal edge of the specimen within one degree.

The geometry of the notch shall be measured on at least one specimen in a set of five specimens. Measurement shall be done at minimum 50 times magnification on either a shadowgraph or a metallograph. The correct location of the notch shall be verified by etching before or after machining.

13.2 The five specimens shall be tested in accordance with the impact test section of ANSI/AWS B4.0. The test temperature shall be as specified in Table 6U or Table 6M, as applicable, for the classification under test.

13.3U In evaluating the test results, the lowest and the highest values obtained shall be disregarded. Two of the remaining three values shall equal, or exceed, the specified 20 ft·lbf energy level. One of the three may be lower, but not lower than 15 ft·lbf, and the average of the three shall not be less than the required 20 ft·lbf energy level.

TABLE 6U
A5.17 IMPACT TEST REQUIREMENTS[1] [2]

Digit	Maximum Test Temperature, °F	Minimum Average Energy Level
0	0	20 ft · lbf
2	−20	
4	−40	
5	−50	
6	−60	
8	−80	
Z	No impact requirements	

NOTES:
(1) Based on the results of the impact tests of the weld metal, the manufacturer shall insert in the classification the appropriate digit from the table above (Table 6U), as indicated in Figure 1U.
(2) Weld metal from a specific flux-electrode combination that meets impact requirements at a given temperature also meets the requirements at all higher temperatures in this table (i.e., weld metal meeting the requirements for digit 5 also meets the requirements for digits 4, 2, 0, and Z).

TABLE 6M
A5.17M IMPACT TEST REQUIREMENTS[1] [2]

Digit	Maximum Test Temperature, °C	Minimum Average Energy Level
0	0	27 Joules
2	−20	
3	−30	
4	−40	
5	−50	
6	−60	
Z	No impact requirements	

NOTES:
(1) Based on the results of the impact tests of the weld metal, the manufacturer shall insert in the classification the appropriate digit from the table above (Table 6M), as indicated in Figure 1M.
(2) Weld metal from a specific flux-electrode combination that meets impact requirements at a given temperature also meets the requirements at all higher temperatures in this table (i.e., weld metal meeting the requirements for digit 5 also meets the requirements for digits 4, 3, 2, 0 and Z).

13.3M In evaluating the test results, the lowest and the highest values obtained shall be disregarded. Two of the remaining three values shall equal, or exceed, the specified 27 J energy level. One of the three may be lower, but not lower than 20 J, and the average of the three shall not be less than the required 27 J energy level.

14. Diffusible Hydrogen Test

14.1 For each flux-electrode combination to be identified by a diffusible hydrogen designator, that combination shall be tested in the as-manufactured condition according to one of the methods given in ANSI/AWS A4.3, *Standard Methods for Determination of the Diffusible Hydrogen Content of Martensitic, Bainitic, and Ferritic Steel Weld Metal Produced by Arc Welding*. The welding procedure shown in Fig. 3B for the Groove Weld Test assembly shall be used for the diffusible hydrogen test. The travel speed, however, may be increased up to a maximum of 28 in./min [12 mm/s]. This adjustment in travel speed is permitted in order to establish a weld bead width that is appropriate for the specimen. The electrode, flux, or both, may be baked to restore the moisture content before testing to the as-manufactured condition. When this is done, the baking time and temperature shall be noted on the test report. The manufacturer of the electrode, flux, or both, should be consulted for their recommendation regarding the time and temperature for restoring their products to the as-manufactured condition. The diffusible hydrogen designator may be added to the classification designation according to the average test values as compared to the requirements of Table 7.

14.2 For purposes of certifying compliance with diffusible hydrogen requirements, the reference atmospheric condition shall be an absolute humidity of 10 grains of moisture per pound [1.5 grams of moisture per kg] of dry air at the time of welding. The actual atmospheric conditions shall be reported along with the average diffusible hydrogen value for the test according to ANSI/AWS A4.3.

14.3 When the absolute humidity equals or exceeds the reference condition at the time of preparation of the test assembly, the test shall be acceptable as demonstrating compliance with the requirements of this specification, provided that the actual test results satisfy the diffusible hydrogen requirements for a given designator, as specified in Table 7.

PART C — MANUFACTURE, IDENTIFICATION, AND PACKAGING

15. Method of Manufacture

The electrodes and fluxes classified according to this specification may be manufactured by any method that will produce material that meets the requirements of this specification.

TABLE 7
DIFFUSIBLE HYDROGEN REQUIREMENTS[1]

AWS Flux-Electrode Combination Classification	Optional Supplemental Diffusible Hydrogen Designation[2]	Average Diffusible Hydrogen Maximum[3] (mL/100g Deposited Metal)
All	H16	16.0
All	H8	8.0
All	H4	4.0
All	H2	2.0

NOTES:
(1) Diffusible hydrogen test is required only when specified by the purchaser or when the manufacturer puts the diffusible hydrogen designator on the label (see also Section A3 and A6.4 in the Annex).
(2) This designator is added to the end of the complete flux-electrode classification (see Figures 1U and 1M).
(3) Flux-electrode combinations meeting requirements for an H2 designator also meet the requirements for H4, H8, and H16. Flux-electrode combinations meeting requirements for an H4 designator also meet the requirements for H8 and H16. Flux-electrode combinations meeting the requirements for an H8 designator also meet the requirements for H16.

TABLE 8U
A5.17 STANDARD ELECTRODE SIZES AND TOLERANCES[1]

	Tolerances (± in.)	
Diameter (in.)	Solid (E)	Composite (EC)
1/16 or 0.062	0.002	0.003
5/64 or 0.078	0.002	0.003
3/32 or 0.094	0.002	0.003
7/64 or 0.109	0.003	0.004
1/8 or 0.125	0.003	0.004
5/32 or 0.156	0.004	0.005
3/16 or 0.188	0.004	0.005
7/32 or 0.219	0.004	0.005
1/4 or 0.250	0.004	0.005

NOTE:
(1) Other sizes and tolerances may be supplied as agreed between purchaser and supplier.

TABLE 8M
A5.17M STANDARD ELECTRODE SIZES AND TOLERANCES[1]

	Tolerance (mm)	
Diameter (mm)	Solid (E)	Composite (EC)
1.6		
2		
2.4	±0.04	+0.04, −0.05
2.5		
2.8		
3		
3.2		
4		
4.8	±0.06	+0.06, −0.08
5		
5.6		
6		
6.4		

NOTE:
(1) Other sizes and tolerances may be supplied as agreed between purchaser and supplier.

15.1 Crushed Slags. Slag formed during the welding process that is subsequently crushed for use as a welding flux is defined as *crushed slag*. Crushed slag and blends of crushed slag with unused (virgin) flux may be classified as a welding flux under this specification. The letter "S" shall be used as a mandatory classification designator as shown in Figs. 1U and 1M when the flux being classified is a crushed slag or is a blend of crushed slag with virgin flux. (See A6.1.5 in the Annex.)

16. Electrode Requirements

16.1 Standard Sizes. Standard sizes for electrodes in the different package forms (coils with support, coils without support, and drums) are shown in Table 8U or Table 8M, as applicable.

16.2 Finish and Uniformity

16.2.1 The electrode shall have a smooth finish which is free from slivers, depressions, scratches, scale, seams and laps (exclusive of the longitudinal joint in composite electrodes), and foreign matter that would adversely affect the welding characteristics, the operation of the welding equipment, or the properties of the weld metal.

16.2.2 Each continuous length of electrode shall be from a single heat or lot of material. Welds, when present, shall have been made so as not to interfere

with the uniform, uninterrupted feeding of the electrode on automatic and semiautomatic equipment.

16.2.3 Core ingredients in composite electrodes shall be distributed with sufficient uniformity throughout the length of the electrode so as not to adversely affect the performance of the electrode or the properties of the weld metal.

16.2.4 A suitable protective coating, such as copper, may be applied to any electrode covered in this specification.

16.3 Standard Package Forms

16.3.1 Standard package forms are coils with support, coils without support, and drums. Standard package dimensions and weights for each form are given in Table 9. Package forms, sizes and weights other than these shall be as agreed between purchaser and supplier.

16.3.2 The liners in coils with support shall be designed and constructed to prevent distortion of the coil during normal handling and use, and shall be clean and dry enough to maintain the cleanliness of the electrode.

16.3.3 Drums shall be designed and constructed to prevent distortion of the electrode during normal handling and use and shall be clean and dry enough to maintain the cleanliness of the electrode.

16.4 Winding Requirements

16.4.1 The electrode shall be wound so that kinks, waves, sharp bends, or wedging are not encountered, leaving the electrode free to unwind without restriction. The outside end of the electrode (the end with which welding is to begin) shall be identified so it can be readily located and shall be fastened to avoid unwinding.

16.4.2 The cast and helix of the electrode in coils and drums shall be such that the electrode will feed in an uninterrupted manner in automatic and semiautomatic equipment.

16.5 Electrode Identification

16.5.1 The product information and the precautionary information required in 16.7 for marking each package shall appear also on each coil and drum.

16.5.2 Coils without support shall be identified by a tag containing this information securely attached to the inside end of the coil.

16.5.3 Coils with support shall have the information securely affixed in a prominent location on the support.

16.5.4 Drums shall have the information securely affixed in a prominent location on the side of the drum.

16.6 Packaging. Electrodes shall be suitably packaged to ensure against damage during shipment and storage under normal conditions.

16.7 Marking of Packages

16.7.1 The following product information (as a minimum) shall be legibly marked so as to be visible from the outside of each unit package.

(a) AWS specification and classification number (year of issue may be excluded)

(b) Supplier's name and trade designation

(c) In the case of a composite electrode, the trade designation of the flux (or fluxes) with which its weld metal composition meets the requirements of Table 2

(d) Size and net weight

(e) Lot, control or heat number.

16.7.2 The following precautionary information (as a minimum) shall be prominently displayed in legible print on all packages of welding electrodes, including individual unit packages enclosed within a larger package.

WARNING:

PROTECT yourself and others. Read and understand this information.

FUMES and GASES can be hazardous to your health.

ARC RAYS can injure eyes and burn skin.

ELECTRIC SHOCK can KILL.

- Before use, read, and understand the manufacturer's instructions, Material Safety Data Sheets (MSDSs), and your employer's safety practices.
- Keep your head out of the fumes.
- Use enough ventilation, exhaust at the arc, or both, to keep fumes and gases away from your breathing zone and the general area.
- Wear correct eye, ear, and body protection.
- Do not touch live electrical parts.
- See American National Standard ANSI/ASC Z49.1, *Safety in Welding, Cutting, and Allied Processes,* published by the American Welding Society, 550 N.W. LeJeune Road, Miami, FL 33126; and OSHA Safety and Health Standards, *29 CFR 1910,* available from the U.S. Government Printing Office, Washington, DC 20402.

DO NOT REMOVE THIS INFORMATION

TABLE 9
STANDARD DIMENSIONS AND WEIGHTS[1] [2]

	Electrode Size[3]		Net Weight of Coil[4]		Inside Diameter of Liner		Width of Coil, Max.		Outside Diameter of Coil, Max.	
	in.	mm	lb	kg	in.	mm	in.	mm	in.	mm
Coils with Support	1/16–1/4		25 50 60 65		12 ± 1/8		2 1/2 or 4 5/8		17 1/2 or 17	
		1.6–6.4		12 15 20 25 30		300 + 15, −0		(5)		(5)
	3/32–1/4		100 150 200		(5)		5		31 1/2	
		2.4–6.4		45 70 90 100		610 ± 10		130		800
Coils without Support	1/16–1/4	1.6–6.4	As agreed between purchaser and supplier							
Drums	1/16–1/4	1.6–6.4	As agreed between purchaser and supplier							

NOTES:
(1) Values specified in "in." or "lb" apply to A5.17. Values specificed in "mm" or "kg" apply to A5.17M.
(2) Other dimensions and weights may be supplied as agreed between purchaser and supplier.
(3) The range is inclusive.
(4) Net weights shall not vary more than ± 10 percent.
(5) This dimension shall be agreed between purchaser and supplier.

17. Flux Requirements

17.1 Form and Particle Size. Flux shall be granular in form and shall be capable of flowing freely through the flux feeding tubes, valves, and nozzles of standard submerged arc welding equipment. Particle size is not specified here, but, when it is addressed, it shall be a matter of agreement between the purchaser and the supplier.

17.2 Usability. The flux shall permit the production of uniform, well-shaped beads that merge smoothly with each other and the base metal. Undercut, if any, shall not be so deep or so widespread that a subsequent bead will not remove it.

17.3 Packaging

17.3.1 Flux shall be suitably packaged to ensure against damage during shipment.

17.3.2 Flux, in its original unopened container, shall withstand storage under normal conditions for at least six months without damage to its welding characteristics or the properties of the weld. Heating of the flux to assure dryness may be necessary when the very best properties (of which the materials are capable) are required. For specific recommendations, consult the manufacturer.

17.4 Marking of Packages

17.4.1 The following product information (as a minimum) shall be legibly marked so as to be visible from the outside of each unit package.

(a) AWS specification and classification (year of issue may be excluded)

(b) Supplier's name and trade designation (In the case of crushed slags, the crusher, not the original producer, shall be considered the supplier. See also Annex A6.1.5.)

(c) The trade designation of each composite electrode with which the flux manufacturer has classified the flux, if applicable

(d) Net weight

(e) Lot, control, or heat number

(f) Particle size, if more than one particle size of flux of that trade designation is produced

17.4.2 All packages of flux shall be marked as required in 16.7.2 for the electrodes.

Annex
Guide to AWS Specification for Carbon Steel Electrodes and Fluxes for Submerged Arc Welding

(This Annex is not a part of ANSI/AWS A5.17/A5.17M-97, *Specification for Carbon Steel Electrodes and Fluxes for Submerged Arc Welding*, but is included for information purposes only).

A1. Introduction

The purpose of this guide is to correlate the electrode and flux classifications with their intended applications so the specification can be used effectively. Reference to appropriate base metal specifications is made whenever that can be done and when it would be helpful. Such references are intended only as examples rather than complete listings of the base metals for which each electrode and flux combination is suitable.

A2. Classification System

A2.1 Classification of Electrodes. The system for identifying the electrode classifications in this specification follows the standard pattern used in other AWS filler metal specifications. The letter "E" (or "EC" for composite electrodes) at the beginning of each classification designation stands for electrode. The remainder of the designation indicates the chemical composition of the electrode or, in the case of composite electrodes, the chemical composition of the weld metal obtained with a particular flux. See Fig. 1U or Fig. 1M, as applicable.

The letter "L" indicates that the solid electrode is comparatively low in manganese content. The letter "M" indicates a medium manganese content, while the letter "H" indicates a comparatively high manganese content. The one or two digits following the manganese designator indicate the nominal carbon content of the electrode. The letter "K," which appears in some designations, indicates that the electrode is made from a heat of silicon-killed steel. Solid electrodes are classified only on the basis of their chemical composition, as specified in Table 1 of this specification.

A composite electrode is indicated by the letter "C" after the "E" and a numerical suffix. The composition of a composite electrode may include metallic elements in the core material that are also present as oxides, fluorides, etc., of those same elements. Therefore, the chemical analysis of a composite electrode may not be directly comparable to an analysis made on a solid electrode. For this reason, the composition of composite electrodes is not used for classification purposes under this specification, and the user is referred to weld metal composition (Table 2) with a particular flux, rather than to electrode composition.

A2.2 "G" Classification and the Use of "Not Specified" and "Not Required"

A2.2.1 This specification includes filler metals classified as "EG" or "ECG." The "G" indicates that the filler metal is of a general classification. It is "general" because not all of the particular requirements specified for each of the other classifications are specified for this classification. The intent, in establishing this classification, is to provide a means by which filler metals that differ in one respect or another (chemical composition, for example) from all other classifications (meaning that the composition of the filler metal — in the case of the example — does not meet the composition specified for any of the classifications in the specification) can still be classified according to the specification without awaiting revision. This means, then, that two filler metals — each bearing the same "G" classification — may be quite different in some certain respect (chemical composition, again, for example).

A2.2.2 The point of difference (although not necessarily the amount of the difference) referred to above

will be readily apparent from the use of the words "not required" and "not specified" in the specification. The use of these words is as follows:

Not Specified is used in those areas of the specification that refer to the results of some particular test. It indicates that the requirements for that test are not specified for that particular classification.

Not Required is used in those areas of the specification that refer to the test that normally is required to be conducted to classify a filler metal. It indicates that the test is not required because the requirements (results) for the test have not been specified for that particular classification.

Restating the case, when a requirement is not specified, it is not necessary to conduct the corresponding test in order to classify a filler metal to that classification. When a purchaser wants the information provided by that test, in order to consider a particular product of that classification for a certain application, the purchaser will have to arrange for that information with the supplier of that product. The purchaser will also have to establish with that supplier just what the testing procedure and the acceptance requirements are to be for that test. The purchaser may want to incorporate that information, via ANSI/AWS A5.01, *Filler Metal Procurement Guidelines,* in the purchase order.

A2.2.3 Request for Filler Metal Classification

(a) When a filler metal cannot be classified according to some classification other than a "G" classification, the manufacturer may request that a classification be established for that filler metal. The manufacturer may do this by following the procedure given here. When the manufacturer elects to use the "G" classification, the Committee on Filler Metals recommends that the manufacturer still request that a classification be established for that filler metal, as long as the filler metal is of commercial significance.

(b) A request to establish a new filler metal classification must be submitted in writing, and it needs to provide sufficient detail to permit the Committee on Filler Metals or the Subcommittee to determine whether a new classification or the modification of an existing classification is more appropriate, and whether either is necessary to satisfy the need. The request needs to state the variables and their limits, for such a classification or modification. The request should contain some indication of the time by which completion of the new classification or modification is needed.

(c) The request should be sent to the Secretary of the Committee on Filler Metals at AWS Headquarters. Upon receipt of the request, the Secretary will:

(1) Assign an identifying number to the request. This number will include the date the request was received.

(2) Confirm receipt of the request and give the identification number to the person who made the request.

(3) Send a copy of the request to the Chair of the Committee on Filler Metals and the particular Subcommittee involved.

(4) File the original request.

(5) Add the request to the log of outstanding requests.

(d) All necessary action on each request will be completed as soon as possible. If more than 12 months lapse, the Secretary shall inform the requestor of the status of the request, with copies to the Chairs of the Committee and the Subcommittee. Requests still outstanding after 18 months shall be considered not to have been answered in a "timely manner" and the Secretary shall report these to the Chair of the Committee on Filler Metals, for action.

(e) The Secretary shall include a copy of the log of all requests pending and those completed during the preceding year with the agenda for each Committee on Filler Metals meeting. Any other publication of requests that have been completed will be at the option of the American Welding Society, as deemed appropriate.

A2.3 Classification of Fluxes. Fluxes are classified on the basis of the mechanical properties of the weld metal they produce, with some certain classification of electrode, under the specific test conditions called for in Part B of this specification.

A2.3.1U As examples of A5.17 U.S. Customary Unit classifications, consider the following:

F7A2-EH14
FS6A0-EM13K
F7P6-EM12K
F7P4-EC1

The prefix "F" designates an unused (virgin) flux. The prefix "FS" designates a flux that is made solely from crushed slag or is a blend of crushed slag with virgin flux. This is followed by a single digit representing the minimum tensile strength required of the weld metal in 10 000 psi increments.

When the letter "A" follows the strength designator, it indicates that the weld metal was tested (and is classified) in the as-welded condition. When the letter "P" follows the strength designator, it indicates that

the weld metal was tested (and is classified) after postweld heat treatment called for in the specification. The digit that follows the "A" or "P" will be a number or the letter "Z." This digit refers to the impact strength of the weld metal. Specifically, it designates, on the Fahrenheit scale, a temperature at (and above) which the weld metal meets, or exceeds, the required 20 ft·lbf Charpy V-notch impact strength (except for the letter "Z," which indicates that no impact requirement is specified — see Table 6U).[4] These mechanical property designations are followed by the designation of the electrode used in classifying the flux (see Tables 1 and 2). The suffix (EH14, EM12K, EC1, etc.) included after the hyphen refers to the electrode classification with which the flux will deposit weld metal that meets the specified mechanical properties when tested as called for in the specification.

A2.3.1M As examples of A5.17M International System of Units (SI) classifications, consider the following:

F43A3-EM13K
FS43A0-EM11K
F48P5-EH12K

The prefix "F" designates a virgin flux. The prefix "FS" designates a flux that is made solely from crushed slag or is a blend of crushed slag with virgin flux. This is followed by two digits representing the minimum tensile strength required of the weld metal in 10 MPa increments.

When the letter "A" or "P" follows the strength designators, it indicates, as it does in the A5.17 classification system, the weld metal was tested (and is classified) in either the as-welded (A) or postweld heat-treated (P) condition. The digit that follows the "A" or "P" will be a number or the letter "Z." This digit refers to the impact strength of the weld metal.

Specifically, it designates, on the Celsius scale, a temperature at (and above) which the weld metal meets, or exceeds, the required 27 J Charpy V-notch impact strength (except for the letter "Z," which indicates that no impact requirement is specified — see Table 6M). These mechanical property designations are followed by the designation of the electrode used in classifying the flux (see Tables 1 and 2). The suffix (EM13K, EH12K, etc.) included after the hyphen refers to the electrode classification with which the flux will deposit weld metal that meets the specific mechanical properties when tested as called for in the specification.

[4]Note that except for digit "4" the same designator for impact strength in Tables 6U and 6M signify different temperatures. For example, "6" in Table 6U signifies a maximum test temperature of −60°F, whereas the same designator in Table 6M signifies a maximum test temperature of −60°C, equivalent to −76°F.

TABLE A1
COMPARISON OF ELECTRODE DESIGNATIONS

AWS Classification	Proposed ISO No.(1)
EL8	S1100
EL8K	S1110
EL12	S1000
EM11K	S2030
EM12	S2000
EM12K	S2010
EM13K	S2020
EM14K	S2021
EM15K	S2210
EH10K	S3000
EH11K	S3030
EH12K	S3010
EH14	S4000

NOTE:
(1) Based on IIW Doc. XII-1232-91.

A2.3.2 It should be noted that flux of any specific trade designation may have many classifications. The number is limited only by the number of different electrode classifications and the condition of heat treatment (as-welded and postweld heat treated) with which the flux can meet the classification requirements. The flux marking lists at least one, and may list all, classifications to which the flux conforms. It should also be noted that the specific usability (or operating) characteristics of various fluxes of the same classification may differ in one respect or another.

A2.3.3 Solid electrodes having the same classification are interchangeable when used with a specific flux; composite electrodes may not be.

A2.4 International Designation System. An international system for designating welding filler metals is under development by the International Institute of Welding (IIW) for use in future specifications to be issued by the International Standards Organization (ISO). Table A1 shows the proposed designations for steel filler metals. In that system, the initial "S" designates a solid wire or rod followed by a four-digit number. Composite wires are designated with an initial "T."

A3. Acceptance

Acceptance of all welding materials classified under this specification is in accordance with the latest edition of ANSI/AWS A5.01, as the specification states. Any testing a purchaser requires of the supplier, for material shipped in accordance with this specification, shall be clearly stated in the purchase order, in accordance with ANSI/AWS A5.01.

In the absence of any such statement in the purchase order, the supplier may ship the material with whatever testing is normally conducted on material of that classification, as specified in Schedule F, Table 1, of ANSI/AWS A5.01. Testing in accordance with any other Schedule in that Table must be specifically required by the purchase order. In such cases, acceptance of the material shipped will be in accordance with those requirements.

A4. Certification

The act of placing the AWS specification and classification designations on the packaging enclosing the product, or the classification on the product itself, constitutes the supplier's (manufacturer's) certification that the product meets all of the requirements of that specification.

The only testing requirement implicit in this certification is that the manufacturer has actually conducted the tests required by the specification on material that is representative of that being shipped and that the material met the requirements of the specification. Representative material, in this case, is any production run of that classification using the same formulation.

"Certification" is not to be construed to mean that tests of any kind were necessarily conducted on samples of the specific material shipped. Tests on such material may or may not have been made. The basis for the certification required by the specification is the classification test of "representative material" cited above, and the "Manufacturer's Quality Assurance System" in ANSI/AWS A5.01.

A5. Ventilation During Welding

A5.1 The following are five major factors which govern the quantity of fumes to which welders and welding operators can be exposed during welding:

(a) Dimensions of the space in which welding is done (with special regard to the height of the ceiling)

(b) Number of welders and welding operators working in that space

(c) Rate of evolution of fumes, gases, or dust according to the materials and processes involved

(d) The proximity of the welders or welding operators to the fumes as they issue from the welding zone, and to the gases and dusts in the space in which the welders or welding operators are working

(e) The ventilation provided to the space in which the welding is done

A5.2 American National Standard ANSI/ASC Z49.1, *Safety in Welding, Cutting, and Allied Processes* (published by the American Welding Society), discusses the ventilation that is required during welding and should be referred to for details. Attention is particularly drawn to the section dealing with ventilation.

A6. Welding Considerations

A6.1 Types of Flux. Submerged arc welding fluxes are granular, fusible mineral compounds of various proportions and quantities, manufactured by any of several different methods. In addition, some fluxes may contain intimately mixed metallic ingredients to deoxidize the weld pool. Any flux is likely to produce weld metal of somewhat different composition from that of the electrode used with it due to chemical reactions in the arc and sometimes to the presence of metallic ingredients in the flux. A change in arc voltage during welding will change the quantity of flux interacting with a given quantity of electrode and may, therefore, change the composition of the weld metal. This latter change provides a means of describing fluxes as "neutral," "active," or "alloy."

A6.1.1 Neutral Fluxes. Neutral fluxes are those which will not produce any significant change in the weld metal chemical analysis as a result of a large change in the arc voltage, and thus, the arc length.

The primary use for neutral fluxes is in multipass welding, especially when the base metal exceeds 1 in. [25 mm] in thickness.

Note the following considerations concerning neutral fluxes:

(a) Since neutral fluxes contain little or no deoxidizers, they must rely on the electrode to provide deoxidation. Single-pass welds with insufficient deoxidation on heavily oxidized base metal may be prone to porosity, centerline cracking, or both.

(b) While neutral fluxes do maintain the chemical composition of the weld metal even when the voltage is changed, it is not always true that the chemical composition of the weld metal is the same as the chemical composition of the electrode used. Some

neutral fluxes decompose in the heat of the arc and release oxygen, resulting in a lower carbon value in the weld metal than the carbon content of the electrode itself. Some neutral fluxes contain manganese silicate which can decompose in the heat of the arc to add some manganese and silicon to the weld metal even though no metallic manganese or silicon was added to these particular fluxes. These changes in the chemical composition of the weld metal are fairly consistent, even when there are large changes in voltage.

(c) Even when a neutral flux is used to maintain the weld metal chemical composition through a range of welding voltages, weld properties such as strength level and impact properties can change because of changes in other welding parameters such as depth of fusion, heat input, and number of passes.

A6.1.2 Active Fluxes. Active fluxes are those which contain small amounts of manganese, silicon, or both. These deoxidizers are added to the flux to provide improved resistance to porosity and weld cracking caused by contaminants on or in the base metal.

The primary use for active fluxes is to make single-pass welds, especially on oxidized base metal. Note the following considerations concerning active fluxes:

(a) Since active fluxes do contain some deoxidizers, the manganese, silicon, or both, in the weld metal will vary with changes in arc voltage. An increase in manganese or silicon increases the strength and hardness of the weld metal in multipass welds but may lower the impact properties. For this reason, the voltage may need to be more tightly controlled for multipass welding with active fluxes than when using neutral fluxes.

(b) Some fluxes are more active than others. This means they offer more resistance to porosity due to base-metal surface oxides in single-pass welds than a flux which is less active, but may pose more problems in multipass welding.

A6.1.3 Alloy Fluxes. Alloy fluxes are those which can be used with a carbon steel electrode to make alloy weld metal. The alloys for the weld metal are added as ingredients in the flux.

The primary use for alloy fluxes is to weld low-alloy steels and for hardfacing. As such, they are outside of the scope of this specification. See the latest edition of ANSI/AWS A5.23/A5.23M, *Specification for Low-Alloy Steel Electrodes and Fluxes for Submerged Arc Welding,* for a more complete discussion of alloy fluxes.

A6.1.4 Wall Neutrality Number. The Wall Neutrality Number (N) is a convenient relative measure of flux neutrality. The Wall Neutrality Number addresses fluxes and electrodes for welding carbon steel with regard to the weld metal manganese and silicon content. It does not address alloy fluxes. For a flux-electrode combination to be considered neutral, it should have a N of 35 or less. The lower the number, the more neutral is the flux.

Determination of the Wall Neutrality Number can be done in accordance with the following:

(a) A weld pad of the type shown in Fig. 2 is welded with the flux-electrode combination being tested. The welding parameters shall be as specified in Fig. 3B for the weld test plate for the diameter electrode being used.

(b) A second weld pad is welded using the same parameters, except that the arc voltage is increased by 8 volts.

(c) The top surface of each of the weld pads is ground or machined smooth to clean metal. Samples sufficient for analysis are removed by machining. Weld metal is analyzed only from the top (fourth) layer of the weld pad. The samples are analyzed separately for silicon and manganese.

(d) The Wall Neutrality Number depends on the change in silicon, regardless of whether it increases or decreases, and on the change in manganese, regardless of whether it increases or decreases. The Wall Neutrality Number is the absolute value (ignoring positive or negative signs) and is calculated as follows:

$$N = 100 (|\Delta\%Si| + |\Delta\%Mn|)$$

where $\Delta\%$ Si is the difference in silicon content of the two pads, and $\Delta\%$ Mn is the corresponding difference in manganese content.

A6.1.5 Crushed Slags. Slag formed during the welding process that is subsequently crushed for use as a welding flux is defined as *crushed slag*. This is different from a recycled flux which was never fused into a slag and can often be collected from a clean surface and reused without crushing. Crushed slag and blends of crushed slag with unused (virgin) flux may be classified as a welding flux under this specification, but shall not be considered to be the same as virgin flux.

Although it is possible to crush and reuse submerged arc slag as a welding flux, the crushed slag, regardless of any addition of virgin flux to it, is a new and chemically different flux. This is because the slag formed during submerged arc welding does not have the same chemical composition or welding characteristics as the virgin flux. Its composition is affected by the composition of the original flux, chemical reactions which occur due to the welding arc, the base metal and electrode compositions, and the welding parameters.

Blends of crushed slag with the original brand of virgin flux from which it was generated cannot be assumed to conform to the classification of either component, even when both the crushed slag and virgin flux conform to the same classification (except for the "S" designator). It shall be the responsibility of the crusher or fabricator partner, who performs the blending, to verify that any intended blend of crushed slag with the original brand of virgin flux is in full conformance with the classification requirements of this specification.

As with any flux product, the manufacturer (crusher) shall follow a detailed processing procedure with controlled input material, preparation, crushing, and blending, which will ensure that a standard quality of output welding flux product is attained that meets the requirement for the classification designator.

A6.1.6 Closed-Loop, Crushed Slags. Slag generated by a fabricator from a specific brand of flux under controlled welding conditions and crushed for subsequent reuse by the same fabricator is defined as *closed-loop, crushed slag.*

Closed-loop, crushed slags, or blends of closed-loop, crushed slag with the original brand of virgin flux ensure better control of input material by virtue of the inherent partnering of the fabricator with the crusher. In some instances, these partners may be one and the same. If blending of slag with virgin flux is done, changes in the original brand of virgin flux or in the blending ratio can affect the quality of the final product.

A6.2 Choice of Electrodes. In choosing an electrode classification for submerged arc welding of carbon steel, the most important considerations are the manganese and silicon contents in the electrode, the effect of the flux on recovery of manganese and silicon in the weld metal, whether the weld is to be single pass or multipass, and the mechanical properties expected of the weld metal.

A certain minimum weld-metal manganese content is necessary to avoid centerline cracking. This minimum depends upon restraint of the joint and upon the weld-metal composition. In the event that centerline cracking is encountered, especially with a low-manganese electrode (see Table 1) and neutral flux, a change to a higher manganese electrode, a change to a more active flux, or both, may eliminate the problem.

Certain fluxes, generally considered to be neutral, tend to remove carbon and manganese to a limited extent and to replace these elements with silicon. With such fluxes, a silicon-killed electrode is often not necessary though it may be used. Other fluxes add no silicon and may therefore require the use of a silicon-killed electrode for proper wetting and freedom from porosity. The flux manufacturer should be consulted for electrode recommendations suitable for a given flux.

In welding single-pass fillet welds, especially on scaly base metal, it is important that the flux, electrode, or both, provide sufficient deoxidation to avoid unacceptable porosity. Silicon is a more powerful deoxidizer than manganese. In such applications, use of a silicon-killed electrode or of an active flux, or both, may be essential. Again, manufacturer's recommendations should be consulted.

The EM14K electrodes are alloyed with small amounts of titanium, although they are considered as carbon steel electrodes. The titanium functions to improve strength and notch toughness under certain conditions of high-heat input welding or PWHT. The manufacturer's recommendations should be consulted.

Electrodes of the EH12K classification are high Mn electrodes with the Mn and Si balanced to enhance impact properties on applications that require high deposition rates or multiple arc procedures, or both, in both the as-welded and postweld heat-treated conditions.

Composite electrodes are generally designed for a specific flux. The flux identification is required (see 16.7.1) to be marked on the electrode package. Before using a composite electrode with a flux not indicated on the electrode package markings, the electrode producer should be contacted for recommendations. A composite electrode might be chosen for higher melting rate and lower depth of fusion at a given current level than would be obtained under the same conditions with a solid electrode.

A6.3 Mechanical Properties of Submerged Arc Welds. Tables 5U and 6U (for the U.S. Customary Units classification system) and Tables 5M and 6M (for the International System of Units classification system) of this specification list the mechanical properties required of weld metal from flux-electrode classifications (the electrodes are classified in Tables 1 and 2). The mechanical properties are determined from specimens prepared according to the procedure called for in the specification. That procedure minimizes dilution from the base metal and thereby more accurately reflects the properties of the undiluted weld metal from each flux-electrode combination.

In use, the electrodes and fluxes are handled separately, and either of them may be changed without changing the other. For this reason, a classification system with standardized test methods is necessary to relate the electrodes and fluxes to the properties of their weld metal. Chemical reactions between the molten portion of the electrode and the flux, and dilution by

the base metal all affect the composition of the weld metal.

Submerged arc welds are not always made with the multipass procedure required in the specification. They frequently are made in a single pass, at least within certain limits on the thickness of the base metal. When a high level of notch toughness is required, multipass welds may be necessary.

The specific mechanical properties of a weld are a function of its chemical composition, cooling rate, and postweld heat treatment. High-amperage, single-pass welds have greater depth of fusion and hence, greater dilution by the base metal than lower current, multipass welds. Moreover, large, single-pass welds solidify and cool more slowly than the smaller weld beads of a multipass weld. Furthermore, the succeeding passes of a multipass weld subject the weld metal of previous passes to a variety of temperature and cooling cycles that alter the metallurgical structure of different portions of those beads. For this reason, the properties of a single-pass weld may be somewhat different from those of a multipass weld made with the same electrode and flux.

The weld metal properties in this specification are determined either in the as-welded condition or after a postweld heat treatment (one hour at 1150°F [620°C]), or both. Most of the weld metals are suitable for service in either condition, but the specification cannot cover all of the conditions that such weld metals may encounter in fabrication and service. For this reason, the classifications in this specification require that the weld metals be produced and tested under certain specific conditions.

Procedures employed in practice may require voltage, amperage, type of current, and travel speeds that are considerably different from those required in this specification. In addition, differences encountered in electrode size, electrode composition, electrode extension, joint configuration, preheat temperature, interpass temperature, and postweld heat treatment can have a significant effect on the properties of the joint. Within a given electrode classification, the electrode composition can vary sufficiently to produce variations in the mechanical properties of the weld deposit in both the as-welded and postweld heat-treated conditions.

Postweld heat-treatment times in excess of the 1 hour used for classification purposes in this specification (conventionally, 20 to 30 hours for very thick sections) may have a major influence on the strength and toughness of the weld metal. Both can be substantially reduced. The user needs to be aware of this and of the fact that the mechanical properties of carbon steel weld metal produced with other procedures may differ from the properties required by Tables 5U and 6U or Tables 5M and 6M of this specification, as applicable.

A6.4 Diffusible Hydrogen. The submerged arc welding process can be used to provide low-hydrogen weld deposits when care is taken to maintain the flux and electrode in a dry condition. In submerged arc welding with carbon steel electrodes and fluxes classified in this specification, weld metal or heat-affected zone cracking associated with diffusible hydrogen tends to become more of a problem with increasing weld-metal strength, increasing heat-affected zone hardness, increasing diffusible hydrogen content, decreasing preheat and interpass temperature, and decreasing time at or above the interpass temperature during and after welding. The detection of hydrogen cracking may be delayed for several hours after cooling due to the time required for the crack to grow to a size which can be detected by routine inspection methods. It may appear as transverse weld cracks, longitudinal centerline cracks (especially in root beads), and toe or underbead cracks in the heat-affected zone.

Since the available diffusible hydrogen level strongly influences the tendency towards hydrogen-induced cracking, it may be desirable to measure the diffusible hydrogen content resulting from a particular flux-electrode combination. Accordingly, the use of optional supplemental designators for diffusible hydrogen is introduced to indicate the maximum average value obtained under a clearly defined test condition in ANSI/AWS A4.3, *Standard Methods for Determination of the Diffusible Hydrogen Content of Martensitic, Bainitic, and Ferritic Steel Weld Metal Produced by Arc Welding.*

The user of this information is cautioned that actual fabrication conditions may result in different diffusible hydrogen values from those indicated by the designator. The use of a reference atmospheric condition during welding is necessitated because the arc always is imperfectly shielded. Moisture from the air, distinct from that in the electrode or flux, can enter the arc and subsequently the weld pool, contributing to the resulting observed diffusible hydrogen. This effect can be minimized by maintaining a suitable depth of flux cover (normally 1 to 1-½ in. [25 to 38 mm]) in front of the electrode during welding.

Nevertheless, some air will mix with the flux cover and add its moisture to the other sources of diffusible hydrogen.

It is possible for this extra diffusible hydrogen to significantly affect the outcome of a diffusible hydrogen test. For this reason, it is appropriate to specify a reference atmospheric condition. The reference atmospheric condition of 10 grains of moisture per lb [1.5

grams of moisture per kilogram] of dry air is equivalent to 10 percent relative humidity at 68°F [20°C].

A7. General Safety Considerations

A7.1 Burn Protection. Molten metal, sparks, slag, and hot work surfaces are produced by welding, cutting, and allied processes. These can cause burns if precautionary measures are not used. Workers should wear protective clothing made of fire-resistant material. Pant cuffs, open pockets, or other places on clothing that can catch and retain molten metal or sparks should not be worn. High-top shoes or leather leggings and fire-resistant gloves should be worn. Pant legs should be worn over the outside of high-top shoes. Helmets or hand shields that provide protection for the face, neck, and ears, and a head covering to protect the head should be used. In addition, appropriate eye protection should be used.

When welding overhead or in confined spaces, ear plugs to prevent weld spatter from entering the ear canal should be worn in combination with goggles or equivalent to give added eye protection. Clothing should be kept free of grease and oil. Combustible materials should not be carried in pockets. If any combustible substance has been spilled on clothing, a change to clean, fire-resistant clothing should be made before working with open arcs or flame. Aprons, cape-sleeves, leggings, and shoulder covers with bibs designed for welding service should be used. Where welding or cutting of unusually thick base metal is involved, sheet metal shields should be used for extra protection.

Mechanization of highly hazardous processes or jobs should be considered. Other personnel in the work area should be protected by the use of noncombustible screens or by the use of appropriate protection as described in the previous paragraph. Before leaving a work area, hot workpieces should be marked to alert other persons of this hazard. No attempt should be made to repair or disconnect electrical equipment when it is under load. Disconnection under load produces arcing of the contacts and may cause burns or shock, or both. (*Note: Burns can be caused by touching hot equipment such as electrode holders, tips, and nozzles. Therefore, insulated gloves should be worn when these items are handled, unless an adequate cooling period has been allowed before touching.*)

The following sources are for more detailed information on personal protection:

(a) American National Standards Institute. ANSI/ASC Z41.1, *Safety-Toe Footwear.* New York, NY: American National Standards Institute.[5]

(b) ANSI/ASC Z49.1, *Safety in Welding, Cutting, and Allied Processes.* Miami, FL: American Welding Society.

(c) ANSI/ASC Z87.1, *Practice for Occupational and Educational Eye and Face Protection.* New York, NY: American National Standards Institute.

(d) Occupational Safety and Health Administration. *Code of Federal Regulations,* Title 29 Labor, Chapter XVII, Part 1910. Washington, D.C.: U.S. Government Printing Office.[6]

A7.2 Electrical Hazards. Electric shock can kill; however, it can be avoided. Live electrical parts should not be touched. The manufacturer's instructions and recommended safe practices should be read and understood. Faulty installation, improper grounding, and incorrect operation and maintenance of electrical equipment are all sources of danger.

All electrical equipment and the workpieces should be grounded. The workpiece lead is not a ground lead. It is used only to complete the welding circuit. A separate connection is required to ground the workpiece. The workpiece should not be mistaken for a ground connection.

The correct cable size should be used, since sustained overloading will cause cable failure and result in possible electrical shock or fire hazard. All electrical connections should be tight, clean, and dry. Poor connections can overheat and even melt. Further, they can produce dangerous arcs and sparks. Water, grease, or dirt should not be allowed to accumulate on plugs, sockets, or electrical units. Moisture can conduct electricity.

To prevent shock, the work area, equipment, and clothing should be kept dry at all times. Welders should wear dry gloves and rubber-soled shoes, or stand on a dry board or insulated platform. Cables and connections should be kept in good condition. Improper or worn electrical connections may create conditions that could cause electrical shock or short circuits. Worn, damaged, or bare cables should not be used. Open-circuit voltage should be avoided. When several welders are working with arcs of different polarities, or when a number of alternating current machines are being used, the open-circuit voltages can be additive. The added voltages increase the severity of the shock hazard.

[5] ANSI documents are available from the American National Standards Institute, 11 West 42 Street, 13th Floor, New York, NY 10036.

[6] OSHA documents are available from U.S. Government Printing Office, Washington, DC 20402.

In case of electric shock, the power should be turned off. If the rescuer must resort to pulling the victim from the live contact, nonconducting materials should be used. If the victim is not breathing, cardiopulmonary resuscitation (CPR) should be administered as soon as contact with the electrical source is broken. A physician should be called and CPR continued until breathing has been restored, or until a physician has arrived. Electrical burns are treated as thermal burns; that is, clean, cold (iced) compresses should be applied. Contamination should be avoided; the area should be covered with a clean, dry dressing; and the patient should be transported to medical assistance.

Recognized safety standards such as ANSI/ASC Z49.1, *Safety in Welding, Cutting, and Allied Processes*, and NFPA No. 70, *National Electrical Code*, available from National Fire Protection Association, 1 Batterymarch Park, Quincy, MA 02269, should be followed.

A7.3 Fumes and Gases. Many welding, cutting, and allied processes produce fumes and gases which may be harmful to health. Fumes are solid particles that originate from welding filler metals and fluxes, the base metal, and any coatings present on the base metal. Gases are produced during the welding process or may be produced by the effects of process radiation on the surrounding environment. Management personnel and welders alike should be aware of the effects of these fumes and gases. The amount and composition of these fumes and gases depend upon the composition of the filler metal and base metal, welding process, current level, arc length, and other factors.

The possible effects of overexposure range from irritation of eyes, skin, and respiratory system to more severe complications. Effects may occur immediately or at some later time. Fumes can cause symptoms such as nausea, headaches, dizziness, and metal fume fever. The possibility of more serious health effects exists when especially toxic materials are involved. In confined spaces, the shielding gases and fumes might displace breathing air and cause asphyxiation. One's head should always be kept out of the fumes. Sufficient ventilation, exhaust at the arc, or both, should be used to keep fumes and gases from the breathing zone and the general area.

In some cases, natural air movement will provide enough ventilation. Where ventilation may be questionable, air sampling should be used to determine if corrective measures should be applied.

More detailed information on fumes and gases produced by the various welding processes may be found in the following:

(a) The permissible exposure limits required by OSHA can be found in *Code of Federal Regulations*, Title 29, Chapter XVII, Part 1910. The OSHA General Industry Standards are available from the Superintendent of Documents, U.S. Government Printing Office, Washington, DC 20402.

(b) The recommended threshold limit values for fumes and gases may be found in *Threshold Limit Values for Chemical Substances and Physical Agents in the Workroom Environment*, published by the American Conference of Governmental Industrial Hygienists (ACGIH), 1330 Kemper Meadow Drive, Cincinnati, OH 45240-1634.

(c) The results of an AWS-funded study are available in a report entitled, *Fumes and Gases in the Welding Environment*, available from the American Welding Society.

(d) Manufacturer's Material Safety Data Sheet for the product.

A7.4 Radiation. Welding, cutting, and allied operations may produce radiant energy (radiation) harmful to health. One should become acquainted with the effects of this radiant energy.

Radiant energy may be ionizing (such as x-rays), or nonionizing (such as ultraviolet, visible light, or infrared). Radiation can produce a variety of effects such as skin burns and eye damage, depending on the radiant energy's wavelength and intensity, if excessive exposure occurs.

A7.4.1 Ionizing Radiation. Ionizing radiation is produced by the electron beam welding process. It is ordinarily controlled within acceptance limits by use of suitable shielding enclosing the welding area.

A7.4.2 Nonionizing Radiation. The intensity and wavelengths of nonionizing radiant energy produced depend on many factors, such as the process, welding parameters, electrode and base-metal composition, fluxes, and any coating or plating on the base metal. Some processes, such as resistance welding and cold pressure welding, ordinarily produce negligible quantities of radiant energy. However, most arc welding and cutting processes (except submerged arc welding when used properly), laser welding and torch welding, cutting, brazing, or soldering can produce quantities of nonionizing radiation such that precautionary measures are necessary.

Protection from possible harmful effects caused by nonionizing radiant energy from welding include the following measures:

(a) One should not look at welding arcs except through welding filter plates which meet the require-

ments of ANSI/ASC Z87.1, *Practice for Occupational and Educational Eye and Face Protection*, published by American National Standards Institute. It should be noted that transparent welding curtains are not intended as welding filter plates, but rather, are intended to protect passersby from incidental exposure.

(b) Exposed skin should be protected with adequate gloves and clothing as specified in ANSI/ASC Z49.1, *Safety in Welding, Cutting, and Allied Processes*, published by American Welding Society.

(c) Reflections from welding arcs should be avoided, and all personnel should be protected from intense reflections. *(Note: Paints using pigments of substantially zinc oxide or titanium dioxide have a lower reflectance for ultraviolet radiation.)*

(d) Screens, curtains, or adequate distance from aisles, walkways, etc., should be used to avoid exposing passersby to welding operations.

(e) Safety glasses with UV-protective side shields have been shown to provide some beneficial protection from ultraviolet radiation produced by welding arcs.

A7.4.3 Ionizing radiation information sources include the following:

(a) AWS F2.1-78, *Recommended Safe Practices for Electron Beam Welding and Cutting*, available from the American Welding Society, 550 N.W. LeJeune Road, Miami, FL 33126.

(b) Manufacturer's product information literature.

A7.4.4 The following include nonionizing radiation information sources:

(a) American National Standards Institute. ANSI/ASC Z136.1, *Safe Use of Lasers*, New York, NY: American National Standards Institute.

(b) —. ANSI/ASC Z87.1, *Practice for Occupational and Educational Eye and Face Protection*. New York, NY: American National Standards Institute.

(c) —. ANSI/ASC Z49.1, *Safety in Welding, Cutting, and Allied Processes*. (published by AWS) Miami, FL: American Welding Society.

(d) Hinrichs, J. F. Project Committee on Radiation — Summary Report. *Welding Journal*, January 1978.

(e) Moss, C. E. "Optical Radiation Transmission Levels through Transparent Welding Curtains." *Welding Journal*, March 1979.

(f) Moss, C. E., and Murray, W. E. "Optical Radiation Levels Produced in Gas Welding, Torch Brazing, and Oxygen Cutting." *Welding Journal*, September 1979.

(g) Marshall, W. J., Sliney, D. H., et al. "Optical Radiation Levels Produced by Air-Carbon Arc Cutting Processes," *Welding Journal*, March 1980.

(h) National Technical Information Service. Nonionizing radiation protection special study no. 42-0053-77, *Evaluation of the Potential Hazards from Actinic Ultraviolet Radiation Generated by Electric Welding and Cutting Arcs*. Springfield, VA: National Technical Information Service. ADA-033768.

(i) —. Nonionizing radiation protection special study No. 42-0312-77, *Evaluation of the Potential Retina Hazards from Optical Radiation Generated by Electrical Welding and Cutting Arcs*. Springfield, VA: National Technical Information Service, ADA-043023.

SPECIFICATION FOR CARBON STEEL ELECTRODES AND RODS FOR GAS SHIELDED ARC WELDING

SFA-5.18

(Identical with AWS Specification A5.18-93)

1. Scope

This specification prescribes requirements for the classification of carbon steel electrodes (solid, composite stranded and composite metal cored) and rods (solid) for gas metal arc (GMAW), gas tungsten arc (GTAW), and plasma arc (PAW) welding.

PART A — GENERAL REQUIREMENTS

2. Classification

2.1 The solid electrodes (and rods) covered by this specification are classified according to the chemical composition of the electrode, as specified in Table 1, and the mechanical properties of the weld metal, as specified in Tables 3 and 4. The composite stranded electrodes and composite metal cored electrodes covered by this specification are classified according to the chemical composition and mechanical properties of the weld metal as specified in Tables 2, 3, and 4 and the shielding gas employed.

2.2 Electrodes and rods classified under one classification shall not be classified under any other classification in this specification, except the composite stranded electrodes classified as E70C-XC may also be classified as E70C-XM, or both.

2.3 The welding electrodes and rods classified under this specification are intended for gas shielding arc welding, but that is not to prohibit their use with any other process (or any other shielding gas, or combination of shielding gases) for which they are found suitable.

3. Acceptance

Acceptance[1] of the electrodes and rods shall be in accordance with the provisions of ANSI/AWS A 5.01, *Filler Metal Procurement Guidelines.*[2]

4. Certification

By affixing the AWS specification and classification designations to the packaging, or the classification to the product, the manufacturer certifies that the product meets the requirements of this specification.[3]

5. Units of Measure and Rounding-Off Procedure

5.1 U.S. Customary Units are the standard units of measure in this specification. The SI Units are given as equivalent values to the U.S. Customary Units. The standard sizes and dimensions in the two systems are not identical, and for this reason conversion from a standard size or dimension in one system will not always coincide with a standard size or dimension in the other. Suitable conversions encompassing standard sizes of both can be made, however, if appropriate tolerances are applied in each case.

5.2 For the purpose of determining conformance with this specification, an observed or calculated value shall be rounded to the "nearest unit" in the last right-hand

[1] See A3, Acceptance, (in the Appendix) for further information concerning acceptance, testing of the material shipped, and ANSI/A5.01, *Filler Metal Procurement Guidelines.*

[2] AWS standards may be obtained from the American Welding Society, 550 N.W. LeJeune Road, P.O. 351040, Miami, Florida 33135.

[3] See A4, Certification, (in the Appendix) for further information concerning certification and the testing called for to meet this requirement.

TABLE 1
CHEMICAL COMPOSITION REQUIREMENTS FOR SOLID ELECTRODES AND RODS

AWS Classification[b]	UNS Number[b]	Weight Percent[a]												
		C	Mn	Si	P	S	Ni	Cr	Mo	V	Cu[d]	Ti	Zr	Al
ER70S-2	K10726	0.07	0.90 to 1.40	0.40 to 0.70	0.025	0.035	(e)	(e)	(e)	(e)	0.50	0.05 to 0.15	0.02 to 0.12	0.05 to 0.15
ER70S-3	K11022	0.06 to 0.15	0.90 to 1.40	0.45 to 0.75	0.025	0.035	(e)	(e)	(e)	(e)	0.50	—	—	—
ER70S-4	K11132	0.07 to 0.15	1.00 to 1.50	0.65 to 0.85	0.025	0.035	(e)	(e)	(e)	(e)	0.50	—	—	—
ER70S-5	K11357	0.07 to 0.19	0.90 to 1.40	0.30 to 0.60	0.025	0.035	(e)	(e)	(e)	(e)	0.50	—	—	0.50 to 0.90
ER70S-6	K11140	0.06 to 0.15	1.40 to 1.85	0.80 to 1.15	0.025	0.035	(e)	(e)	(e)	(e)	0.50	—	—	—
ER70S-7	K11125	0.07 to 0.15	1.50 to 2.00[f]	0.50 to 0.80	0.025	0.035	(e)	(e)	(e)	(e)	0.50	—	—	—
ER70S-G	—	Not Specified[g]												

NOTES:

a. Single values are maximum.

b. The letter "N" as a suffix to a classification indicates that the weld metal is intended for the core belt region of nuclear reactor vessels, as described in the Annex to the specification. This suffix changes the limits on the phosphorus, vanadium and copper as follows:
   P = 0.012% maximum
   V = 0.05% maximum
   Cu = 0.08% maximum

c. SAE/ASTM Unified Numbering System for Metals and Alloys.

d. Copper due to any coating on the electrode or rod plus the copper content of the filler metal itself, shall not exceed the stated 0.50% max.

e. These residual elements shall not exceed 0.50% in total.

f. In this classification, the maximum Mn may exceed 2.0%. If it does, the maximum C must be reduced 0.01% for each 0.05% for each 0.05% increase in Mn or part thereof.

g. Chemical requirements are not specified but there shall be no intentional addition of Ni, Cr, Mo, and V. Composition shall be reported. Requirements are those agreed to by the purchaser and the supplier.

TABLE 2
CHEMICAL COMPOSITION REQUIREMENTS FOR WELD METAL FROM COMPOSITE ELECTRODES

AWS Classification[a]	UNS Number[b]	Shielding gas[c]	Weight Percent[d]									
			C	Mn	Si	S	P	Ni	Cr	Mo	V	Cu
Multiple-Pass Classifications												
E70C-3X	W07703	75–80% Ar/Balance CO_2 or CO_2	0.12	1.75	0.90	0.03	0.03	(e)	(e)	(e)	(e)	0.50
E70C-6X	W07706	75–80% Ar/Balance CO_2 or CO_2	0.12	1.75	0.90	0.03	0.03	(e)	(e)	(e)	(e)	0.50
E70C-G(X)	—	(f)	Not Specified[g]									
Single-Pass Classifications												
E70C-GS(X)	—	(f)	Chemical Requirements not Specified[h]									

NOTES:
a. The final X shown in the classification represents a "C" or "M" which corresponds to the shielding gas with which the electrode is classified. The use of "C" designates 100% CO_2 shielding, "M" designates 75–80% Ar/balance CO_2. For E70C-G and E70C-GS, the final "C" or "M" may be omitted if these gases are not used for classification.
b. SAE/ASTM Unified Numbering System for Metals and Alloys.
c. Use of a shielding gas other than that specified will result in different weld metal composition.
d. Single values are maximums.
e. To be reported if intentionally added; the sum of Ni, Cr, Mo, and V shall not exceed 0.50%.
f. Shielding gas shall be as agreed upon between purchaser and supplier.
g. Composition shall be reported; the requirements are those agreed to between purchaser and supplier.
h. The composition of weld metal from this classification is not specified since electrodes of this classification are intended only for single pass welds. Dilution, in such welds, usually is quite high.

TABLE 3
TENSION TEST REQUIREMENTS (AS WELDED)

AWS Classification[a]	Shielding Gas	Tensile Strength (minimum)		Yield Strength[b] (minimum)		Elongation Percent (minimum)
		psi	MPa	psi	MPa	
ER70S-2 ER70S-3 ER70S-4 ER70S-5 ER70S-6 ER70S-7	CO_2[c]	70 000	480	58 000	400	22
ER70S-G	d	70 000	480	58 000	400	22
E70C-3X E70C-6X	75–80% Ar/balance CO_2 or Co_2	70 000	480	58 000	400	22
E70C-G(X)	d	70 000	480	58 000	400	22
E70C-GS(X)	d	70 000	480	Not Specified		Not Specified

NOTES:
a. The final X shown in the classification represents a "C" or "M" which corresponds to the shielding gas with which the electrode is classified. The use of "C" designates 100% CO_2 shielding; "M" designates 75–80% Ar/balance CO_2. For E70C-G and E70C-GS, the final "C" or "M" may be omitted.
b. Yield strength at 0.2% offset and elongation in 2 in. (51 mm) gage length.
c. CO_2 = carbon dioxide shielding gas. The use of CO_2 for classification purposes shall not be construed to preclude the use of Ar/CO_2 or Ar/O_2 shielding gas mixtures. A filler metal tested with gas blends, such as Ar/O_2, or Ar/Co_2, may result in weld metal having higher strength and lower elongation.
d. Shielding gas shall be as agreed to between purchaser and supplier.

TABLE 4
IMPACT TEST REQUIREMENTS (AS WELDED)

AWS Classification	Average Impact Strength[a,b] (Minimum)
ER70S-2	20 ft · lbf at −20°F (27J @ − 29°C)
ER70S-3	20 ft · lbf at 0°F (27J @ −18°C)
ER70S-4	Not Required
ER70S-5	Not Required
ER70S-6	20 ft · lbf at −20°F (27J @ −29°C)
ER70S-7	20 ft · lbf at −20°F (27J @ −29°C)
ER70S-G	As agreed between supplier and purchaser
E70C-G(X)	As agreed between supplier and purchaser
E70C-3X	20 ft · lbf at 0°F (27J @ −18°C)
E70C-6X	20 ft · lbf at −20°F (27J @ −29°C)
E70C-GS(X)	Not required

NOTES:
a. Both the highest and lowest of the five test values obtained shall be disregarded in computing the impact strength. Two of the remaining three values shall equal or exceed 20 ft · lbf; one of the three remaining values may be lower than 20 ft · lbf but not lower than 15 ft · lbf. The average of the three shall not be less than the 20 ft · lbf specified.
b. For classifications with the "N" (nuclear) designation, three additional specimens shall be tested at room temperature. Two of the three shall equal, or exceed, 75 ft · lbf (102J), and the third shall not be lower than 70 ft · lbf (95J). Average of the three values shall equal, or exceed, 75 ft · lbf (102J).

place of figures used in expressing the limiting value in accordance with the rounding-off method given in ASTM E29, *Standard Practice for Using Significant Digits in Test Data to Determine Conformance with Specifications.*[4]

PART B — TESTS, PROCEDURES, AND REQUIREMENTS

6. Summary of Tests

6.1 The tests required for each classification are specified in Table 5. The purpose of these tests is to determine the chemical composition, the mechanical properties, and soundness of the weld metal. The base metal for the weld test assemblies, the welding and testing procedures to be employed, and the results required are given in Sections 8 through 12.

6.2 The optional test for diffusible hydrogen in Section 14, Diffusible Hydrogen Test, is not required for classification. See Note (c) of Table 5.

[4] ASTM standards can be obtained from the American Society for Testing and Materials, 100 Barr Harbor Drive, West Conshohocken, PA 19428-2959.

TABLE 5
REQUIRED TESTS

AWS Classification	Chemical Analysis		Radiographic Test	Tension Test	Bend Test	Impact Test	Diffusible Hydrogen Test
	Electrode	Weld Metal					
			Solid Electrodes				
ER70S-2	Required	Not Required	Required	Required	Not Required	Required	c
ER70S-3	Required	Not Required	Required	Required	Not Required	Required	c
ER70S-4	Required	Not Required	Required	Required	Not Required	Not Required	c
ER70S-5	Required	Not Required	Required	Required	Not Required	Not Required	c
ER70S-6	Required	Not Required	Required	Required	Not Required	Required	c
ER70S-7	Required	Not Required	Required	Required	Not Required	Required	c
ER70S-G	Required	Not Required	Required	Required	Not Required	Not Required	c
			Composite Electrodes				
E70C-3X	Not Required	Required	Required	Required	Not Required	Required	c
E70C-6X	Not Required	Required	Required	Required	Not Required	Required	c
E70C-G(X)	Not Required	Required	Required	Required	Not Required	Not Required	c
E70C-GS(X)[a]	Not Required	Not Required	Not Required	Required[b]	Required	Not Required	c

NOTES:
a. Intended for single-pass welding.
b. Transverse tension test. All others are all weld metal tension tests.
c. Optional diffusible hydrogen test is required only when specified by the purchaser or when the manufacturer puts the diffusible hydrogen designator on the label. (Also see A2.2 and A8.2 in the Annex.)

7. Retest

If the results of any test fail to meet the requirement, that test shall be repeated twice. The results of both retests shall meet the requirement. Specimens for retests may be taken from the original test assembly or from one or two new test assemblies. For chemical analysis, retest need be only for those specific elements that failed to meet their requirement.

8. Weld Test Assemblies

8.1 At least one weld test assembly is required, and two may be required (depending on the electrode — solid as opposed to composite — and the manner in which the sample for chemical analysis is taken), as specified in Table 5. They are as follows:

(1) the groove weld in Fig. 1 for mechanical properties and soundness of the weld metal for both composite and solid electrodes, or the groove weld in Fig. 2 for mechanical properties of composite stranded and composite metal cored electrodes designated for single-pass applications only

(2) the weld pad in Fig. 3 for chemical analysis of the weld metal from composite stranded and composite metal cored electrodes.

The sample for chemical analysis of weld metal from composite electrodes may be taken from the reduced section of the fractured all-weld-metal tension test specimen or from the corresponding location in the groove weld in Fig. 1, thereby avoiding the need to make a weld pad. Alternatively, the sample from the groove weld in Fig. 1 may be taken from any location in the weld metal above the tension test specimen. In case of dispute, the weld pad in Fig. 3 shall be the referee method.

8.2 Preparation of each weld test assembly shall be as prescribed in 8.3, 8.4, and 8.5. The base metal for each assembly shall be as required in Table 6 and shall meet the requirements of the ASTM specification shown there, or an equivalent specification. Testing of the assmbly shall be as prescribed in 9.2, 9.3, and Sections 10 through 13.

8.3 Groove Weld

8.3.1 For all classifications except E70C-GS(X), a test assembly shall be prepared and welded as specified in Fig. 1, using base metal of the appropriate type specified in Table 6. The electrode used shall be 0.045 in. (1.1 mm) or $^1/_{16}$ in. (1.6 mm) size (or the size the manufacturer produces that is closest to one of these, if these sizes are not produced).

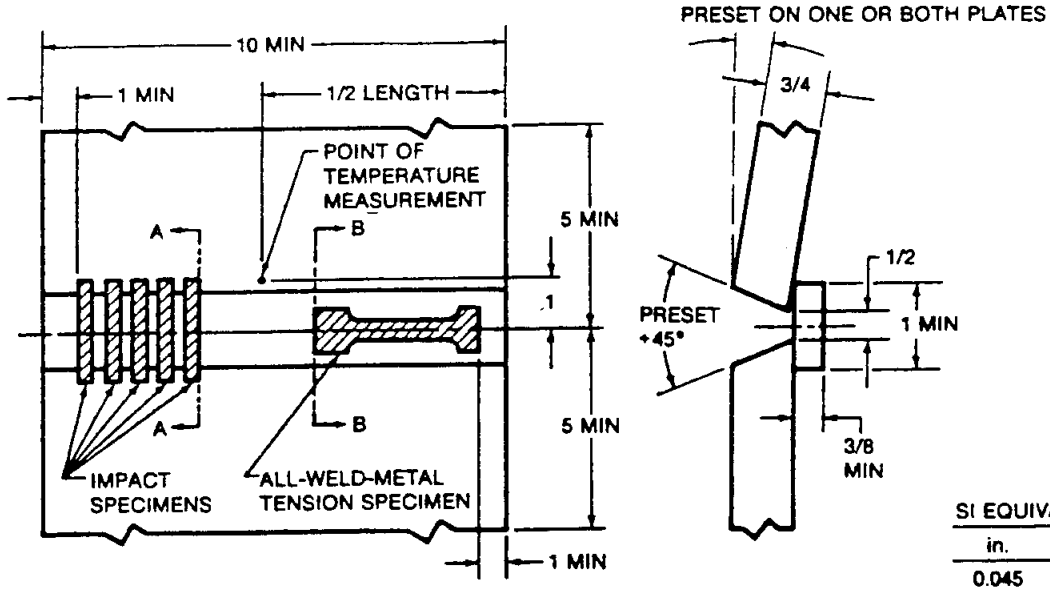

(A) TEST PLATE SHOWING LOCATION OF TEST SPECIMENS

SI EQUIVALENTS

in.	mm
0.045	1.1
1/16	1.6
1/4	6.4
3/8	9.5
1/2	13
3/4	19
1	25
5	125
10	250

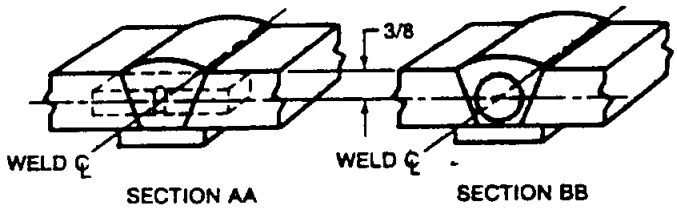

(B) ORIENTATION OF IMPACT SPECIMEN

(C) LOCATION OF ALL-WELD-METAL TENSION SPECIMEN

Test Conditions for Solid Electrodes[c,d]

Standard size[e]	0.045 in.	1/16 in.
Shielding gas[f]	CO_2	CO_2
Wire feed speed	450 in./min (190 mm/sec) ±5%	240 in./min (102 mm/sec) ±5%
Nominal arc voltage	27 to 31 V	26 to 30 V
Resulting current, DCEP[g] (DCEP = electrode positive)	260 to 290 A	330 to 360 A
Tip-to-work distance[h]	3/4 ± 1/8 in. (19 ± 3 mm)	3/4 ± 1/8 in. (19 ± 3 mm)
Travel speed	13 ± 1 in./min (5.5 ± 0.5 mm/sec)	13 ± 1 in./min (5.5 ± 0.5 mm/sec)

Notes:
a. All dimensions (excluding angles) are in inches.
b. Prior to welding, the assembly may be preset as shown so that the welded joint will be sufficiently flat to facilitate test specimen removal. As an alternative, restraint or a combination of restraint and preset may be used.
c. Test conditions for composite electrodes shall be as recommended by the manufacturer.
d. Preheat and interpass temperatures for both solid and composite electrodes shall be as specified in 8.3.1.
e. If sizes other than 0.045 in. and 1/16 in. are tested, wire feed speed, (and resulting current), arc voltage, and tip-to-work distance shall be changed as needed. This joint configuration is not recommended for electrode sizes smaller than 0.035 in. (0.9 mm).
f. If shielding gases or blends other than CO_2 are used, the wire feed speed (and resulting current), arc voltage, and travel speed are to be as agreed to between purchaser and supplier.
g. The required combinations of electrode feed rate, arc voltage, and tip-to-work distance should produce welding currents in the ranges shown. Currents substantially outside these ranges suggest errors in feed rate, tip-to-work distance, voltage settings, or in instrumentation.
h. Distance from the contact tip to the work, not from the shielding gas cup to the work.

FIG. 1 GROOVE WELD TEST ASSEMBLY FOR MECHANICAL PROPERTIES AND SOUNDNESS

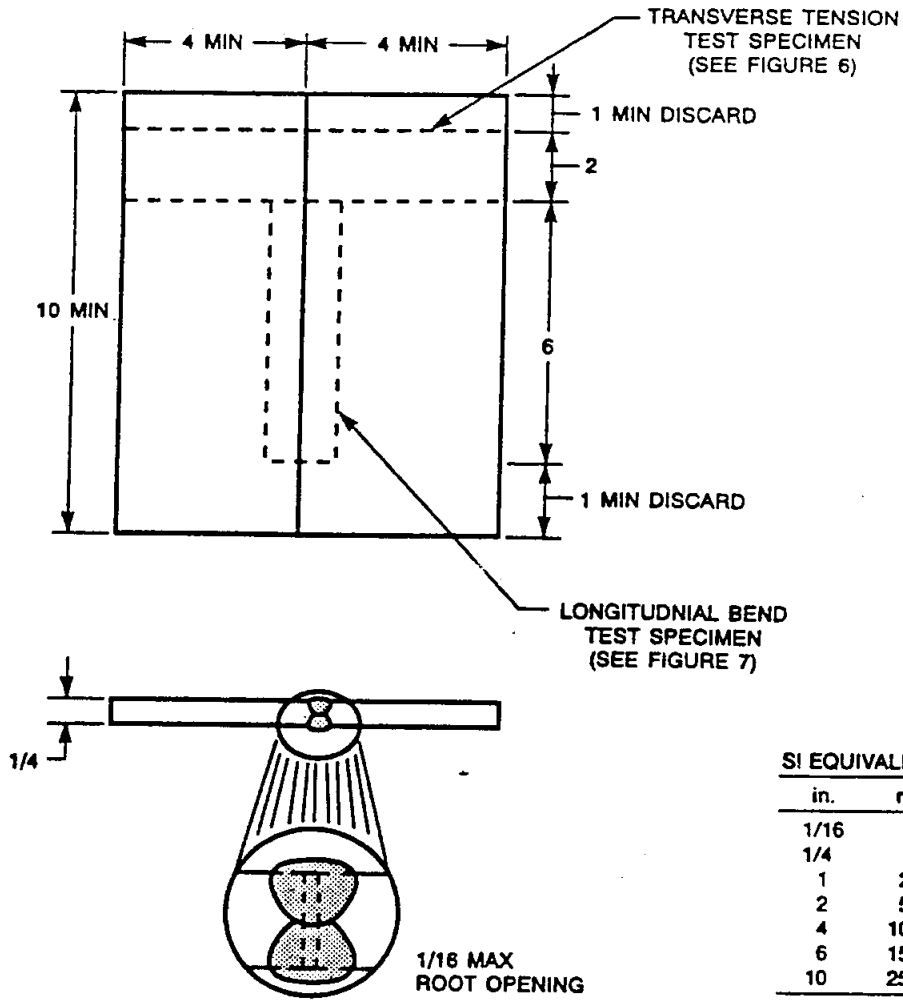

SI EQUIVALENTS

in.	mm
1/16	1.6
1/4	6.4
1	25
2	50
4	100
6	150
10	250

Notes:
a. All dimensions are in inches.
b. Detail A shows the completed joint and approximate weld configuration.

FIG. 2 GROOVE WELD TEST ASSEMBLY FOR TRANSVERSE TENSION AND LONGITUDINAL GUIDED BEND TESTS

Welding shall be in the flat position, and the assembly shall be restrained (or preset) during welding to prevent warpage in excess of 5 deg. An assembly that is warped more than 5 deg. shall be discarded. It shall not be straightened. The test assembly shall be tack welded at room temperature and welding shall begin at that temperature [60°F (16°C) minimum]. Welding shall continue until the assembly has reached a maximum interpass temperature of 325°F (164°C), measured by temperature indicating crayons or surface thermometers at the location shown in Fig. 1.

For the remainder of the weld, a minimum preheat temperature of 275°F (136°C) and maximum interpass temperature of 325°F (164°C) shall be maintained. Should it be necessary to interrupt welding, the assembly shall be allowed to cool in still air at room temperature. The assembly shall be preheated to a temperature of 300 ± 25°F (150 ± 14°C) before welding is resumed.

When welding has been completed and the assembly has cooled, the assembly shall be prepared and tested as specified in Section 10, Radiographic Test; Section 11, Tension Test; and Section 13, Impact Test. All

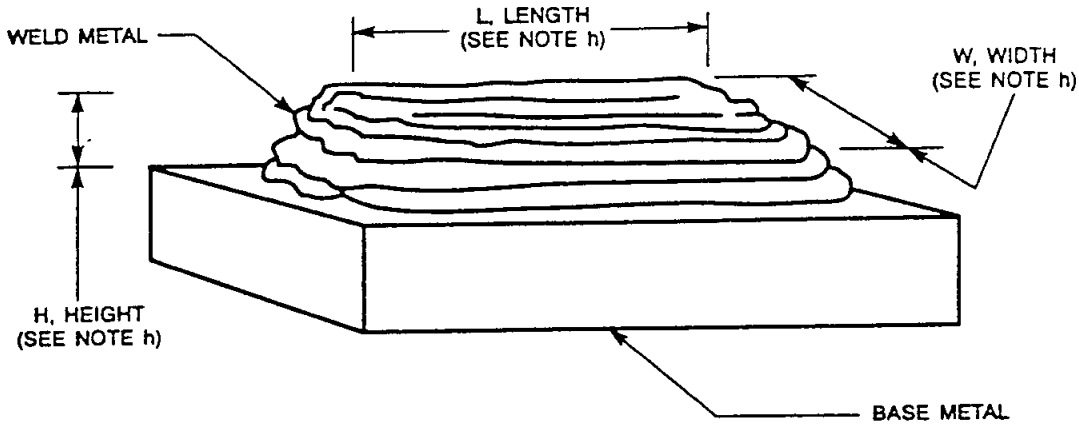

Notes:
a. Base metal of any convenient size, of any type specified in Table 6, shall be used as the base for the weld pad.
b. The surface of the base metal on which the filler metal is to be deposited shall be clean.
c. The pad shall be welded in the flat position with successive layers to obtain weld metal of sufficient height.
d. The number and size of the beads will vary according to the size of the electrode and the width of the weave, as well as the amperage employed.
e. The preheat temperature shall not be less than 60°F (16°C) and the interpass temperature shall not exceed 325°F (164°C).
f. Any slag shall be removed after each pass.
g. The test assembly may be quenched in water between passes to control interpass temperature.
h. The minimum completed pad size shall be at least four layers in height (H), length (L), after allowance for start and stop areas, and width (W) shall be sufficient to perform analysis. The sample for analysis shall be taken at least 3/8 in. (9.5 mm) above the original base metal surface.

FIG. 3 PAD FOR CHEMICAL ANALYSIS OF WELD METAL FROM COMPOSITE ELECTRODES

TABLE 6
BASE METAL FOR TEST ASSEMBLIES

AWS Classification	ASTM Specification	UNS Number
All except E70C-GS(X)	A36,	K02600
	A285 Grade C,	K02801
	A515 Grade 70 or	K03101
	A516 Grade 70	K02700
E70C-GS(X)	A515 Grade 70 or	K03101
	A516 Grade 70	K02700

testing will be performed in the as-welded condition except for the optional aging of the all-weld-metal tension test specimen specified in 11.1.1.

8.3.2 For single-pass electrodes [classification E70C-GS(X)] a test assembly using a base metal as specified in Table 6 shall be prepared and welded as shown in Fig. 2. After tack welding the plates at each end, the test assembly shall be welded in the flat position, with one bead on each side. Welding shall begin with the assembly at room temperature [60°F (16°C) minimum]. When the weld bead has been completed on one side the assembly shall be turned over and the bead depositied on that side, as shown in Fig. 2. This sequence shall not be interrupted. The electrode size shall be 0.045 in. (1.1 mm) or $^{1}/_{16}$ in. (1.6 mm) (or the size the manufacturer produces that is closest to one of these, if these sizes are not produced).

After welding has been completed and the assembly has cooled in still air at room temperature, the assembly shall be prepared and tested as specified in 11.2 and Section 12, Bend Test. All testing will be performed in the as-welded condition except for the optional aging of the bend test specimen specified in 12.2

8.4 Weld Pad. A weld pad shall be prepared using composite stranded and composite metal cored electrodes as shown in Fig. 3, except when, as permitted in 8.1, the sample for analysis is taken from the groove weld (Fig. 1) or the fractured all-weld-metal tension test specimen. Base metal of any convenient size which

will satisfy the minimum requirements of Fig. 3, and is of a type specified in Table 6, shall be used for the weld pad. The surface of the base metal on which the filler metal is deposited shall be clean. The pad shall be welded in the flat position with multiple layers to obtain undiluted weld metal (4 layers minimum thickness). The electrode size shall be 0.045 in. (1.1 mm) or $^1/_{16}$ in. (1.6 mm) or the size that the manufacturer produces that is closest to one of these, if these sizes are not produced. The preheat temperature shall not be less than 60°F (16°C) and the interpass temperature shall not exceed 325°F (164°C). Any slag shall be removed after each pass. The pad may be quenched in water between passes (temperature of the water not specified). The dimensions of the completed pad shall be as shown in Fig. 3. Testing of this assembly shall be as specified in 9.2 and 9.3. The results shall meet the requirements of 9.4.

9. Chemical Analysis

9.1 A sample of the solid electrode or rod shall be prepared for chemical analysis. Solid filler metal, when analyzed for elements that are present in a coating (copper flashing, for example), shall be analyzed without removing the coating. When the filler metal is analyzed for elements other than those in the coating, the coating shall be removed, if its presence affects the results of the analysis for the other elements.

9.2 Composite stranded or metal cored electrodes shall be analyzed in the form of weld metal, not filler metal. The sample for analysis shall be taken from weld metal obtained with the electrode and a shielding gas as specified in Tables 2 and 3. The sample may be taken from the weld pad prepared in accordance with 8.4, from an area of the groove weld as specified in 8.1, or from the reduced section of the fractured tension test specimen. In case of dispute, the weld pad is the referee method.

The top surface of the pad described in 8.4 and shown in Fig. 3 shall be removed and discarded. A sample for analysis shall be obtained from the underlying metal, no closer than $^3/_8$ in. (9.5 mm) to the surface of the base metal in Fig. 3, by any appropriate mechanical means. The sample shall be free of slag. When the sample is taken from the groove weld or the reduced section of the fractured tension test specimen, that material shall be prepared for analysis by any suitable mechanical means.

9.3 The sample obtained as specified in 9.1 or 9.2 shall be analyzed by accepted analytical methods. The referee method shall be ASTM E350, *Standard Method for Chemical Analysis of Carbon Steel, Low Alloy Steel, Silicon Electrical Steel, Ingot Iron and Wrought Iron.*

9.4 The results of the analysis shall meet the requirements of Table 1 for solid electrode or Table 2 for composite electrodes for the classification of electrode under test.

10. Radiographic Test

10.1 The groove weld described in 8.3.1 and shown in Fig. 1 shall be radiographed to evaluate the soundness of the weld metal. In preparation for radiography, the backing shall be removed and both surfaces of the weld shall be machined or ground smooth. Both surfaces of the test assembly, in the area of the weld, shall be smooth enough to avoid difficulty in interpreting the radiograph.

10.2 The weld shall be radiographed in accordance with ASTM E142, *Standard Method for Controlling Quality of Raiographic Testing.* The quality level of inspection shall be 2-2T.

10.3 The soundness of the weld metal meets the requirements of this specification if the radiograph shows no cracks, no incomplete fusion, and no rounded indications in excess of those permitted by the radiographic standards in Fig. 4. In evaluating the radiograph, 1 in. (25 mm) of the weld on each end of the test assembly shall be disregarded.

A rounded indication is an indication (on the radiograph) whose length is no more than three times its width. Rounded indications may be circular, elliptical, conical, or irregular in shape and they may have tails. The size of the rounded indication is the largest dimension of the indication, including any tail that may be present. The indication may be of porosity or slag. Indications whose largest dimension does not exceed $^1/_{64}$ in. (0.4 mm) shall be disregarded. Test assemblies with indications larger than the largest indications permitted in the radiographic standards (Fig. 4) do not meet the requirements of this specification.

11. Tension Test

11.1 One all-weld-metal tension test specimen shall be machined from the groove weld described in 8.3.1, and shown in Fig. 1, as required in Table 5. The dimensions of the specimen shall be as shown in Fig. 5.

11.1.1 After machining, but before testing, the specimen may be aged at 200 to 220°F (93 to 104°C) for up to 48 hr, then allowed to cool to room temperature.

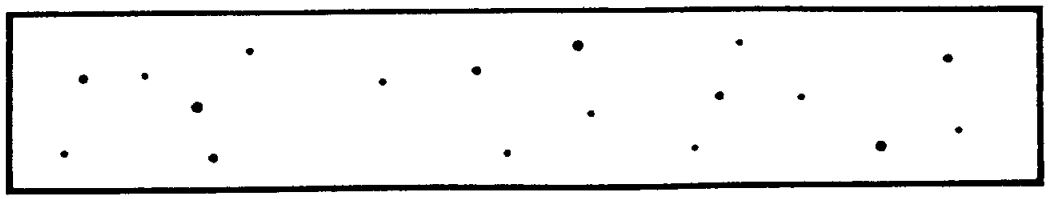

(A) ASSORTED ROUNDED INDICATIONS

SIZE 1/64 in. (0.4 mm) TO 1/16 in. (1.6 mm) IN DIAMETER OR IN LENGTH.
MAXIMUM NUMBER OF INDICATIONS IN ANY 6 in. (150 mm) OF WELD = 18, WITH THE FOLLOWING RESTRICTIONS:

MAXIMUM NUMBER OF LARGE 3/64 in. (1.2 mm) TO 1/16 in. (1.6 mm) IN DIAMETER OR IN LENGTH INDICATIONS = 3.
MAXIMUM NUMBER OF MEDIUM 1/32 in. (0.8 mm) TO 3/64 in. (1.2 mm) IN DIAMETER OR IN LENGTH INDICATIONS = 5.
MAXIMUM NUMBER OF SMALL 1/64 in. (0.4 mm) TO 1/32 in. (0.8 mm) IN DIAMETER OR IN LENGTH INDICATIONS = 10.

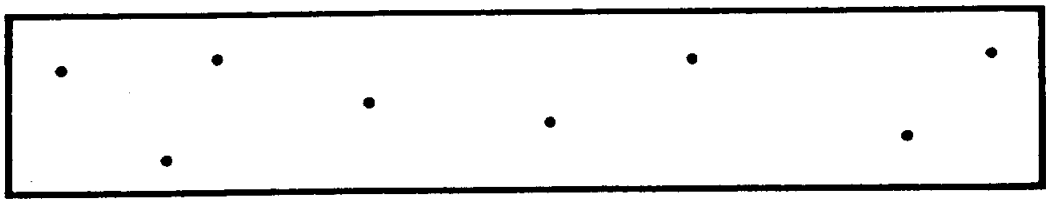

(B) LARGE ROUNDED INDICATIONS

SIZE 3/64 in. (1.2 mm) TO 1/16 in. (1.6 mm) IN DIAMETER OR IN LENGTH.
MAXIMUM NUMBER OF INDICATIONS IN ANY 6 in. (150 mm) OF WELD = 8.

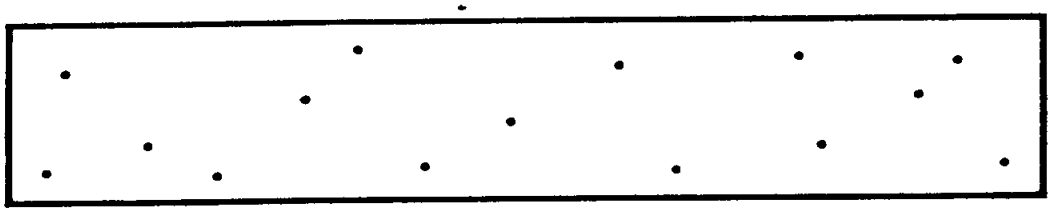

(C) MEDIUM ROUNDED INDICATIONS

SIZE 1/32 in. (0.8 mm) TO 3/64 in. (1.2 mm) IN DIAMETER OR IN LENGTH.
MAXIMUM NUMBER OF INDICATIONS IN ANY 6 in. (150 mm) OF WELD = 15.

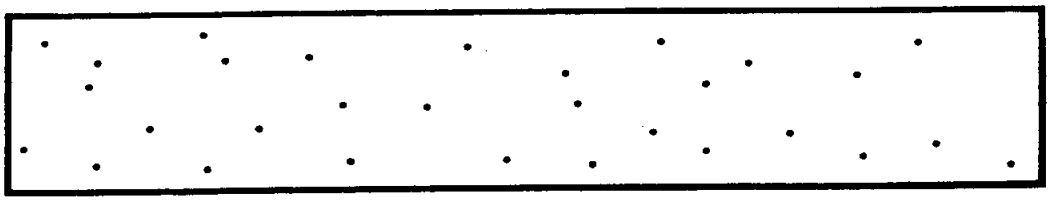

(D) SMALL ROUNDED INDICATIONS

SIZE 1/64 in. (0.4 mm) TO 1/32 in. (0.8 mm) IN DIAMETER OR IN LENGTH.
MAXIMUM NUMBER OF INDICATIONS IN ANY 6 in. (150 mm) OF WELD = 30.

Notes:

1. In using these standards, the chart which is most representative of the size of the rounded indications present in the test specimen radiograph shall be used for determining conformance to these radiographic standards.
2. Since these are test welds specifically made in the laboratory for classification purposes, the radiographic requirements for these test welds are more rigid than those which may be required for general fabrication.
3. Indications whose largest dimension does not exceed 1/64 in. (0.4 mm) shall be disregarded.
4. These standards are equivalent to the Grade 1 standards of ANSI/AWS A5.1, *Specification for Carbon Steel Electrodes for Shielded Metal Arc Welding*.

FIG. 4 RADIOGRAPHIC ACCEPTANCE STANDARDS

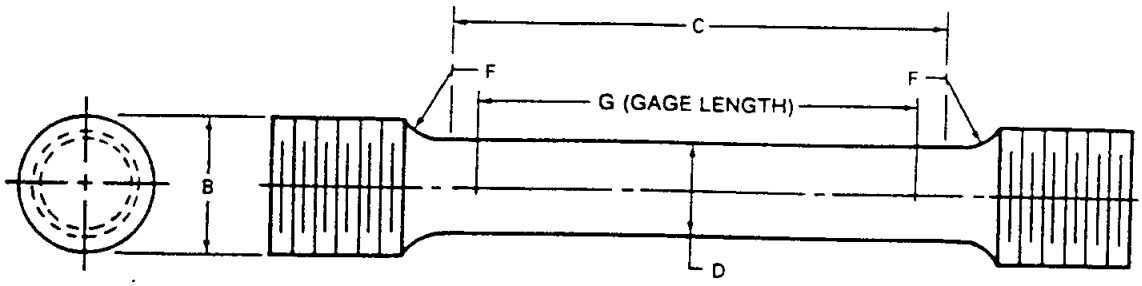

Dimensions of Specimen, in.

D	G	C	B	F, min.
0.500 ± 0.010	2.000 ± 0.005	2-1/4	3/4	0.375

Dimensions of Specimen, mm

D	G	C	B	F, min.
12.7 ± 0.2	50.8 ± 0.1	57	19	9.5

Notes:
a. Dimensions G and C shall be as shown, but ends may be of any shape to fit the testing machine holders as long as the load is axial.
b. The diameter of the specimen within the gage length shall be slightly smaller at the center than at the ends. The difference shall not exceed one percent of the diameter.
c. When the extensometer is required to determine yield strength, dimension C may be increased. However, the percent of the elongation shall be based on dimension G.
d. The surface finish within the C dimension shall be no rougher than 63 μin. (1.6 μm).

FIG. 5 TENSION TEST SPECIMEN

11.1.2 The specimen shall be tested in the manner described in the tension test section of ANSI/AWS B4.0, *Standard Methods for Mechanical Testing of Welds.*

11.1.3 The results of the all-weld-metal tension test shall meet the requirements specified in Table 3.

11.2 One traverse tension test specimen shall be obtained from the groove weld described in 8.3.2, and shown in Fig. 2, as required in Table 5. The dimensions of the specimen shall be as shown in Fig. 6.

11.2.1 The specimen shall be tested in the as-welded (unaged) condition in the manner described in the tension test section of ANSI/AWS B4.0.

11.2.2 The results of the traverse tension test shall meet the requirements specified in Table 3. A test specimen that fractures in the base metal shall be considered to have met those requirements.

12. Bend Test

12.1 One longitudinal bend test specimen shall be machined from the groove weld test assembly described in 8.3.2, and shown in Fig. 2, as required in Table 5. The dimensions of the specimen shall be as shown in Fig. 7.

12.2 After machining, but before bending, the specimen may be aged at 200 to 220°F (93 to 104°C) for up to 48 hr, then allowed to cool to room temperature.

12.3 The specimen shall be tested in the manner described in the bend test section of ANSI/AWS B4.0, on any of the standard bend test jigs shown there. The bend radius shall be $^3/_4$ in. (19 mm). Positioning of the specimen shall be such that the bead with the greater surface discontinuities, if any, is in tension.

12.4 After bending, each specimen shall conform to the $^3/_4$ in. (19 mm) radius, with appropriate allowance

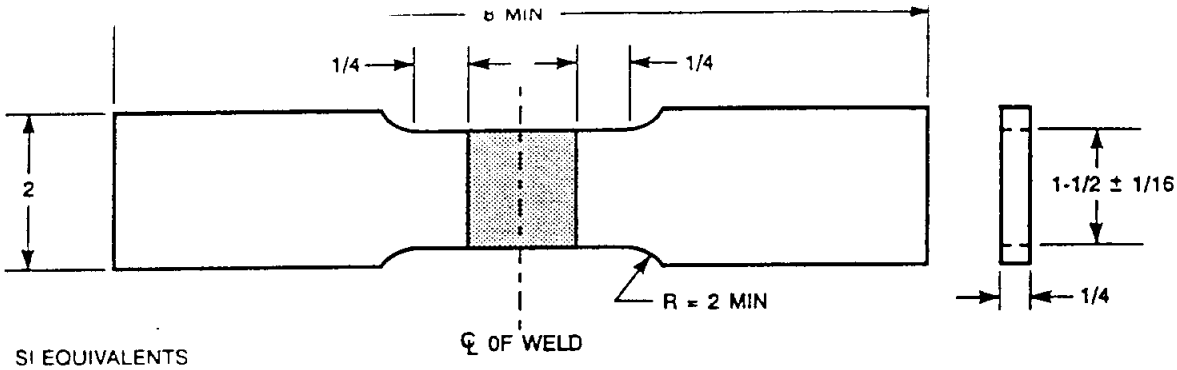

SI EQUIVALENTS	
in.	mm
1/16	1.6
1/4	6.4
2	50
8	200
1-1/2	38

Notes:
a. All dimensions are in inches.
b. Weld reinforcement shall be ground or machined smooth and flush with the surfaces of the specimen. Grinding and machining marks shall be parallel to the length of the longest dimension of the specimen.

FIG. 6 TRANSVERSE TENSION TEST SPECIMEN

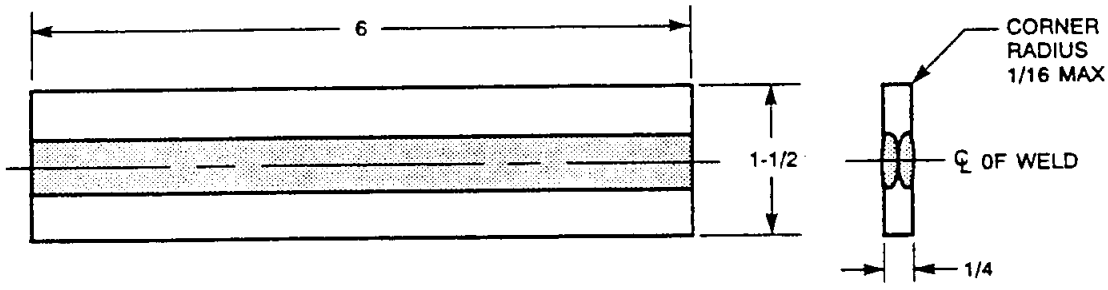

SI EQUIVALENTS	
in.	mm
1/4	6.4
1-1/2	38
6	150

Notes:
a. All dimensions are in inches.
b. Weld reinforcement shall be ground or machined smooth and flush with the surfaces of the specimen. Grinding and machining marks shall be parallel to the length of the longest dimensions of the specimen.

FIG. 7 LONGITUDINAL GUIDED BEND TEST SPECIMEN

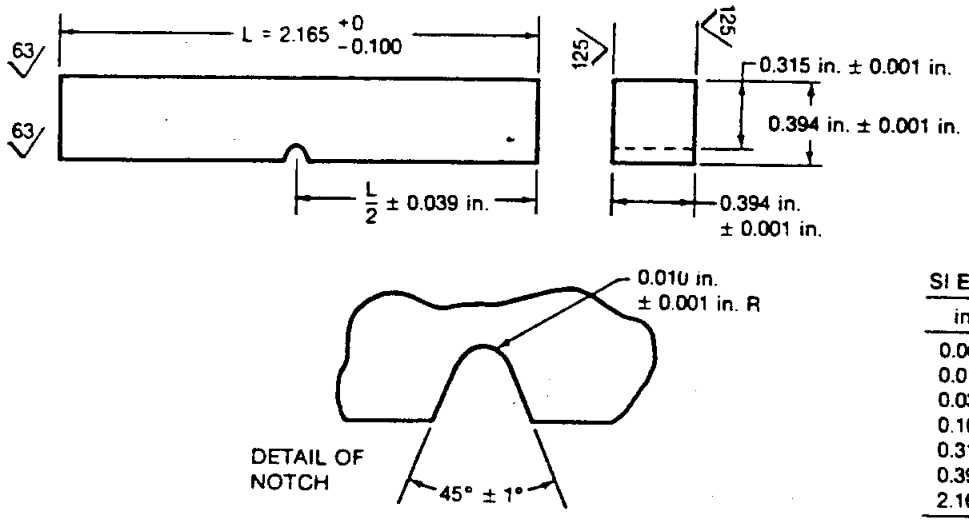

SI EQUIVALENTS

in.	mm
0.001	0.025
0.010	0.255
0.039	1.0
0.100	2.5
0.315	8.0
0.394	10.0
2.165	55.0

Notes:
1. The notched surface and the surface to be struck shall be parallel within 0.002 in. (0.05 mm) and have at least 63 μin. (1.6 μm) finish. The other two surfaces shall be square with the notched or struck surface within ± 10 minutes of the degree and have at least 125 μin. (3.2 μm) finish.
2. The notch shall be smoothly cut by mechanical means and shall be square with the longitudinal edge of the specimen within one degree.
3. The geometry of the notch shall be measured on at least one specimen in a set of five specimens. Measurement shall be done at minimum 50 times magnification on either a shadowgraph or a metallograph.
4. The correct location of the notch shall be verified by etching before or after machining.
5. If a specimen does not break upon being struck, the value for energy absorbed shall be reported as the capacity of the impact testing machine followed by a plus sign (+).

FIG. 8 CHARPY V-NOTCH IMPACT TEST SPECIMEN

for springback, and the weld metal shall not contain openings in excess of $^1/_8$ in. (3.2 mm) on the convex surface.

13. Impact Test

13.1 Five Charpy V-notch impact test specimens (Fig. 8) shall be machined from the test assembly shown in Fig. 1, for those classifications for which impact testing is required in Table 5.

13.2 The five specimens shall be tested in accordance with the impact test section of ANSI/AWS B4.0. The test temperature shall be that specified in Table 4 for the classification under test.

13.3 In evaluating the test results, the lowest and tha highest values obtained shall be disregarded. Two of the remaining three values shall equal, or exceed, the specified 20 ft·lbf (27 J) energy level. One of the three may be lower, but not lower than 15 ft·lbf (20 J), and the average of the three shall be not less than the required 20 ft·lbf (27 J) energy level.

13.4 For classifications with the "N" (nuclear) designation, three additional specimens shall be prepared. These specimens shall be tested at room temperature. Two of the three shall equal, or exceed, 75 ft·lbf (102 J), and the third shall not be lower than 70 ft·lbf (95 J). The average of the three shall equal, or exceed, 75 ft·lbf (102 J).

14. Diffusible Hydrogen Test

14.1 For each electrode to be designated by an optional supplemental diffusible hydrogen designator, the 0.045 in. (1.1 mm) or $^1/_{16}$ in. (1.6 mm) size, or the size that the manufacturer produces that is closest to one of these sizes if the specified sizes are not

TABLE 7
OPTIONAL DIFFUSIBLE HYDROGEN REQUIREMENTS[a]

AWS Classification	Optional Supplemental Diffusible Hydrogen Designator[a,b]	Average Diffusible Hydrogen, Maximum (ml/100g Deposited Metal)[c]
All	H16	16.0
All	H8	8.0
All	H4	4.0

NOTES:
a. See Note c to Table 5.
b. This designator is added to the end of the complete electrode classification designation.
c. Some classifications may not meet the lower average diffusible hydrogen levels (H8 and H4).

produced, shall be tested according to one of the methods given in ANSI/AWS A4.3, *Standard Methods for Determination of the Diffusible Hydrogen Content of Martensitic, Bainitic, and Ferritic Steel Weld Metal Produced by Arc Welding.* The optional supplemental diffusible hydrogen designator may be added to the classification according to the average test value as compared to the requirements of Table 7. If the actual test results for an electrode meet the requirements for the lower or lowest hydrogen designator as specified in Table 7, the electrode also meets the requirements for all higher hydrogen designators in Table 7 without the need for retest.

14.2 Testing shall be done without rebaking or otherwise conditioning the electrode, unless the manufacturer recommends otherwise. If the electrode is rebaked, that fact, along with the method used for rebaking, shall be noted on the test report.

14.3 For purposes of certifying compliance with optional diffusible hydrogen requirements, the reference atmospheric condition shall be an absolute humidity of 10 grains of water vapor per pound (1.43 g/kg) of dry air at the time of welding. The actual atmospheric conditions shall be reported, along with the average value for the test, according to ANSI/AWS A4.3.[5]

14.4 When the absolute humidity equals or exceeds the reference condition at the time of preparation of the test assembly, the test shall be acceptable as demonstrating compliance with the requirements of this specification, provided the actual test results satisfy the diffusible hydrogen requirements for the applicable optional supplemental designator.

[5] See A8.2 (in the Appendix).

PART C — MANUFACTURE, IDENTIFICATION, AND PACKAGING

15. Method of Manufacture

The electrodes and rods classified according to this specification may be manufactured by any method that will produce material that meets the requirements of this specification.

16. Standard Sizes

Standard sizes for electrodes and rods in the different package forms (straight lengths, coils with support, coils without support, drums and spools — see Section 18, Standard Package Forms) are as shown in Table 8.

17. Finish and Uniformity

17.1 All electrodes and rods shall have a smooth finish which is free from slivers, depressions, scratches, scale, seams, laps (exclusive of the longitudinal joint in composite metal cored electrodes), and foreign matter that would adversely affect the welding characteristics, the operation of the welding equipment, or the properties of the weld metal.

17.2 Each continuous length of filler metal shall be from a single heat or lot of material, and welds, when present, shall have been made so as not to interfere with the uniform, uninterrupted feeding of the filler metal on automatic and semiautomatic equipment.

17.3 The components in composite electrodes (including the core ingredients in metal cored electrodes) shall be distributed with sufficient uniformity throughout the length of the electrode so as not to adversely affect the performance of the electrode or the properties of the weld metal.

17.4 A suitable protective coating may be applied to any filler metal in this specification. Copper may be used as a coating for any classification except one that carries the suffix "N" (nuclear) in its designation.

18. Standard Package Forms

18.1 Standard package forms are straight lengths, coils with support, coils without support, spools, and drums. Standard package dimensions and weights for each form are given in Table 9. Package forms, sizes

TABLE 8
STANDARD SIZES[a]

Standard Package Form	Diameter		Tolerance (±)			
			Solid		Composite	
	in.	mm	in.	mm	in.	mm
Straight Lengths[b]	0.045	1.1	0.001	0.02	0.002	0.05
	1/16	0.062	1.6	0.002	0.05	0.002	0.05
	5/64	0.078	2.0	0.002	0.05	0.003	0.08
	3/32	0.094	2.4	0.002	0.05	0.003	0.08
	1/8	0.125	3.2	0.002	0.05	0.003	0.08
	5/32	0.156	4.0	0.002	0.05	0.003	0.08
	3/16	0.188	4.8	0.002	0.05	0.003	0.08
Coils With and Without Support	0.030	0.8	0.001	0.02	0.002	0.05
	0.035	0.9	0.001	0.02	0.002	0.05
	0.045	1.1	0.001	0.02	0.002	0.05
	0.052	1.3	0.002	0.05	0.002	0.05
	1/16	0.062	1.6	0.002	0.05	0.002	0.05
	5/64	0.078	2.0	0.002	0.05	0.003	0.08
	3/32	0.094	2.4	0.002	0.05	0.003	0.08
	7/64	0.109	2.8	0.002	0.05	0.003	0.08
	1/8	0.125	3.2	0.002	0.05	0.003	0.08
Drums	0.035	0.9	0.001	0.02	0.002	0.05
	0.045	1.1	0.001	0.02	0.002	0.05
	0.052	1.3	0.002	0.05	0.002	0.05
	1/16	0.062	1.6	0.002	0.05	0.002	0.05
	5/64	0.078	2.0	0.002	0.05	0.003	0.08
	3/32	0.094	2.4	0.002	0.05	0.003	0.08
	7/64	0.109	2.8	0.002	0.05	0.003	0.08
	1/8	0.125	3.2	0.002	0.05	0.003	0.08
Spools	0.020	0.5	0.001	0.02	0.002	0.05
	0.025	0.6	0.001	0.02	0.002	0.05
	0.030	0.8	0.001	0.02	0.002	0.05
	0.035	0.9	0.001	0.02	0.002	0.05
	0.045	1.1	0.001	0.02	0.002	0.05
	0.052	1.3	0.002	0.05	0.002	0.05
	1/16	0.062	1.6	0.002	0.05	0.002	0.05
	5/16	0.078	2.0	0.002	0.05	0.003	0.08
	3/32	0.094	2.4	0.002	0.05	0.003	0.08
	7/64	0.109	2.8	0.002	0.05	0.003	0.08

NOTES:
a. Dimensions, sizes, tolerances and package forms other than those shown shall be as agreed by purchaser and supplier.
b. Length shall be 36 in. ± 1/2 in. (approximately 900 mm, ±15 mm).

TABLE 9
PACKAGING REQUIREMENTS[a]

Type of Package	Package Size			Net Weight of Electrode	
	in.		mm	lb	kg. (approx.)
Coils without Support	As specified by purchaser[c]			As specified by purchaser[c]	
Coils with Support (See below)	6-3/4	ID	170	14	6.4
	12	ID	300	25, 30, 50, 60, and 65	11, 14, 23, 27, and 30
Spools	4	OD	100	1 1/2 and 2 1/2	0.7 and 1.1
	8	OD	200	10, 12, and 15	4.5, 5.5, and 6.8
	12	OD	300	25, 30, 35, and 44	11, 14, 16, and 20
	14	OD	360	50 and 60	23 and 27
	22	OD	560	250	110
	24	OD	610	300	140
	30	OD	760	600, 750, and 1000	270, 340, and 454
Drums	15-1/2	OD	400	As specified by purchaser[c]	
	20	OD	500	As specified by purchaser[c]	
	23	OD	600	300 and 600	140 and 270
Straight Lengths	36 long			10 and 60	4.5 and 22.7

Coils with Support — Standard Dimensions and Weight

Electrode Size	Coil Net Weight[b]		Coil Dimensions			
			Inside Diameter of Liner		Width of Wound Electrode	
	lb	kg (approx.)	in.	mm	in., max	mm, max
All	14	6.4	6 3/4 ± 1/8	170 ± 3	3	75
	25 and 30	11 and 14	12 ± 1/8	305 ± 3	2 1/2 or 4 5/8	65 or 120
	50, 60, and 65	23, 27, and 30	12 ± 1/8	305 ± 3	4 5/8	120

NOTES:
a. Sizes and net weights other than those specified may be supplied as agreed between supplier and purchaser.
b. Tolerance on net weight shall be ±10 percent.
c. As agreed between supplier and purchaser.

and weights other than these shall be as agreed between purchaser and supplier.

18.2 The liners in coils with support shall be designed and constructed to prevent distortion of the coil during normal handling and use and shall be clean and dry enough to maintain the cleanliness of the filler metal.

18.3 Spools shall be designed and constructed to prevent distortion of the filler metal during normal handling and use and shall be clean and dry enough to maintain the cleanliness of the filler metal. Standard spools are shown in Figs. 9A, 9B, and 9C.

19. Winding Requirements

19.1 Electrodes on spools and in coils (including drums and reels) shall be wound so that kinks, waves, sharp bends, overlapping, or wedging are not encountered, leaving the filler metal free to unwind without restriction. The outside end of the filler metal (the end with which welding is to begin) shall be identified so it can be readily located and shall be fastened to avoid unwinding.

19.2 The cast and helix of electrode in coils, spools, and drums, shall be such that the electrode will feed in an uninterrupted manner in automatic and semiautomatic equipment.

19.3 The cast and helix of solid filler metal on 4 in. (100 mm) spools shall be such that the specimen long enough to produce a single loop, when cut from the spool and laid unrestrained on a flat surface, will

(1) form a circle not less than 4 in. (100 mm) nor more than 9 in. (230 mm) in diameter

(2) rise above the flat surface no more than 1/2 in. (13 mm) at any location.

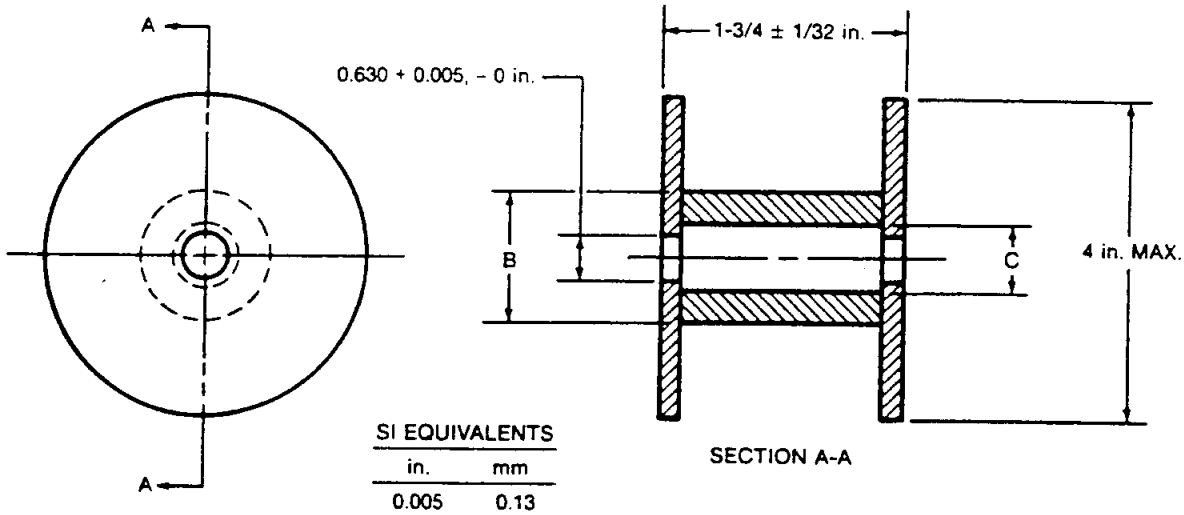

SI EQUIVALENTS

in.	mm
0.005	0.13
1/32	0.8
0.630	16
1-3/4	45
4	102

Notes:
1. Dimension B, outside diameter of barrel, shall be such as to permit proper feeding of the filler metals.
2. Dimension C, inside diameter of barrel, shall be such that the barrel or misalignment of the barrel and flanges will not result in the inside diameter of the barrel being less than the inside diameter of the flanges.

FIG. 9A STANDARD SPOOLS — DIMENSIONS OF 4 IN. SPOOLS

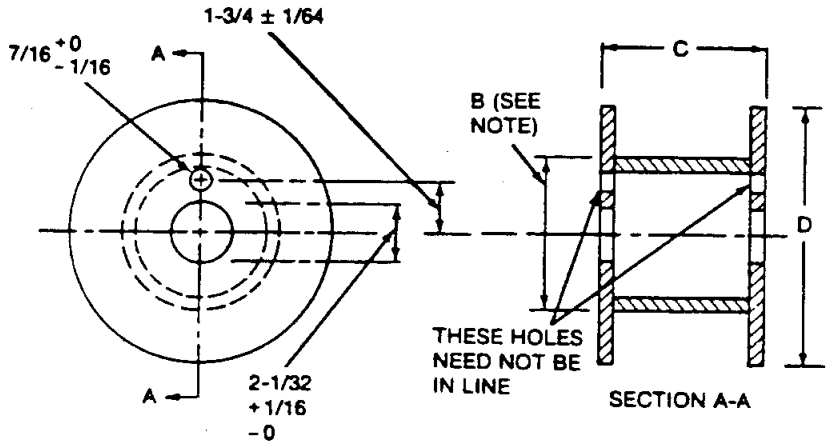

SI EQUIVALENTS

in.	mm
1/64	0.4
1/32	0.8
1/16	1.6
7/16	11
1-3/4	44
2-1/32	52
2-5/32	55
4	100
8	200
12	300
14	350

Note: Dimension B, outside diameter of barrel shall be such as to permit proper feeding of the filler metals.

Dimensions		
Spool Size, in.	C, in.	D, maximum, in.
8	2-5/32 ± 1/32	8
12	4 ± 1/16	12
14	4 ± 1/16	14

FIG. 9B STANDARD SPOOLS — DIMENSIONS OF 8, 12, AND 14 IN. SPOOLS

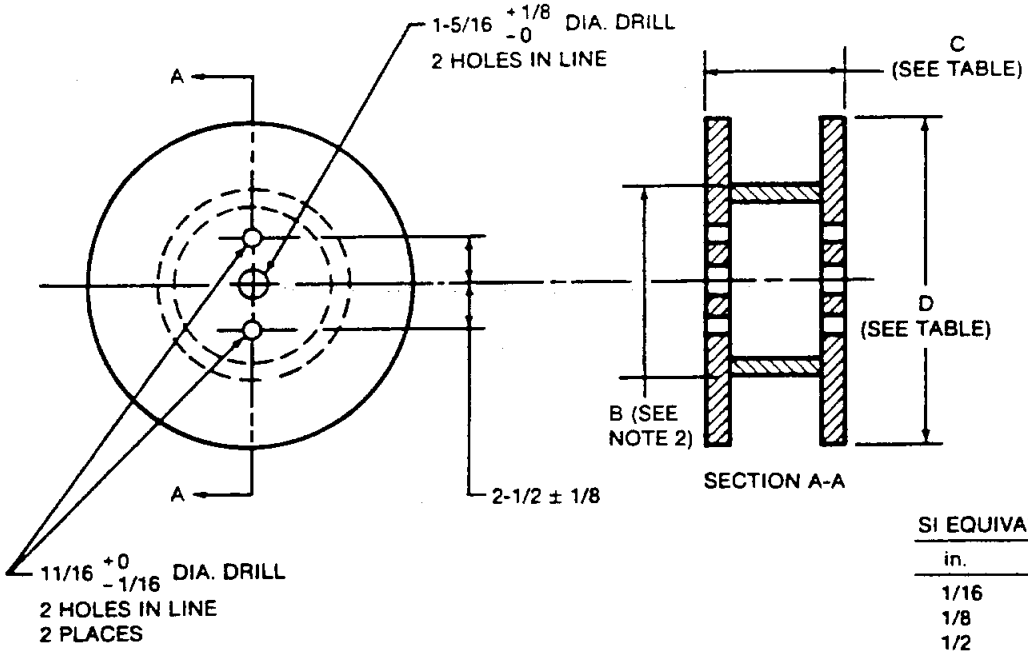

SI EQUIVALENTS	
in.	mm
1/16	1.6
1/8	3
1/2	13
11/16	18
1-5/16	33
2-1/2	63
12	305
13-1/2	345
22	560
24	610
30	760

Dimensions		
Spool Size, in.	D, in.	C, maximum, in.
22	22 ± 1/2	12
24	24 ± 1/2	13-1/2
30	30 ± 1/2	13-1/2

Notes:
1. All dimensions are in inches.
2. Dimension B, outside diameter of barrel, shall be such as to permit proper feeding of the electrode.

FIG. 9C STANDARD SPOOLS — DIMENSIONS OF 22, 24, AND 30 IN. SPOOLS

19.4 The cast and helix of solid filler metal on all other package forms shall be such that the specimen long enough to produce a single loop, when cut from the package and laid unrestrained on a flat surface, will

(1) form a circle not less than 12 in. (305 mm) for 0.030 in. (0.8 mm) and smaller sizes; or not less than 15 in. (380 mm) for 0.035 in. (0.9 mm) and larger sizes

(2) rise above the flat surface no more than 1 in. (25 mm) at any location.

Certain bulk packages may contain wire that has been elastically twisted or otherwise treated to provide straight wire feed. Wire from these packages will not form a circle when cut. Traditional cast and helix measurements may have no relevance. Wire thus treated shall conform only to the winding requirements of 19.1 and 19.2. Any method of wire form inspection shall be as agreed between purchaser and supplier.

20. Filler Metal Identification

20.1 The product information and the precautionary information required in Section 22 for marking each package shall also appear on each coil, spool, and drum.

20.2 Coils without support shall have a tag containing this information securely attached to the filler metal at the inside end of the coil.

20.3 Coils with support shall have the information securely affixed in a prominent location on the support.

20.4 Spools shall have the information securely affixed in a prominent location on the outside of at least one flange of the spool.

20.5 Drums shall have the information securely affixed in a prominent location on the side of the drum.

21. Packaging

Filler metal shall be suitably packaged to ensure against damage during shipment and storage under normal conditions.

22. Marking of Packages

22.1 The following product information (as a minimum) shall be legibly marked so as to be visible from the outside of each unit package:

- AWS specification (year of issue may be excluded) and AWS classification numbers, along with any optional supplemental designators, if applicable
- Supplier's name and trade designation
- Size and net weight
- Lot, control, or heat number

22.2 The following precautionary information (as a minimum) shall be prominently displayed in legible print on all packages of electrodes and rods, including individual unit packages enclosed within a larger package:

WARNING:

Protect yourself and others. Read and understand this information.

FUMES AND GASES can be dangerous to your health.

ARC RAYS can injure eyes and burn skin.

ELECTRIC SHOCK can kill.

- Before use, read and understand the manufacturer's instructions, Material Safety Data Sheets (MSDSs), and your employer's safety practices.
- Keep your head out of the fumes.
- Use enough ventilation, exhaust at the arc, or both, to keep fumes and gases away from your breathing zone and the general area.
- Wear correct eye, ear, and body protection.
- Do not touch live electrical parts.
- See American National Standard Z49.1, *Safety in Welding and Cutting,* published by the American Welding Society, P.O. Box 351040, Miami, Florida 33135; *OSHA Safety and Health Standards,* 29 CFR 1910, available from the U.S. Government Printing Office, Washington, DC 20402.

DO NOT REMOVE THIS INFORMATION

Appendix: Guide to AWS Classification of Carbon Steel Filler Metals for Gas Shielded Arc Welding

(This Appendix is not a part of ANSI/AWS A5.18-93, *Specification for Carbon Steel Electrodes and Rods for Gas Shielded Arc Welding*, but is included for information only.)

A1. Introduction

A1.1 The purpose of this guide is to correlate the electrode and rod classifications with their intended applications so the specification can be used effectively. Reference to appropriate base metal specifications is made whenever that can be done and when it would be helpful. Such references are intended only as examples rather than complete listings of the materials for which each filler metal is suitable.

A2. Classification System

A2.1 The system for identifying the electrode classifications in this specification follows the standard pattern used in other AWS filler metal specifications as shown in Fig. A1.

A2.2 The prefix "E" designates an electrode as in other specifications. The letters "ER" indicate that the filler metal may be used either as an electrode or a rod. The number 70 indicates the required minimum tensile strength as a multiple of 1000 psi (6.9 MPa) of the weld metal in a test weld made using the electrode in accordance with the welding conditions in the specification. The letter "S" designates a solid electrode or rod. The letter "C" designates a composite electrode. The digit following the hyphen, 2, 3, 4, 5, 6, 7, G, or GS, indicates the chemical composition of the filler metal itself, in the case of solid electrodes and rods, or the impact testing temperature of the weld metal under certain test conditions, in the case of the both solid and composite stranded and metal cored electrodes. In the case of some composite stranded and metal cored electrodes, the letter "M" or "C" will follow, indicating the type of shielding gas.

The addition of the letter "N" as a suffix to a classification indicates that the electrode is intended for certain very special welds in nuclear applications. These welds are found in the core belt region of the reactor vessel. This region is subject to intense neutron radiation, and it is necessary, therefore, that the phosphorous, vanadium, and copper contents of the weld metal be limited in order to resist neutron radiation-induced embrittlement. It is also necessary that the weld metal has a high upper shelf energy level in order to withstand some embrittlement, yet remain serviceable over the years.

An optional supplemental diffusible hydrogen designator (H16, H8, or H4) may follow, indicating whether the electrode will meet a maximum hydrogen level of 16, 8, or 4 ml/100g of weld metal when tested as outlined in ANSI/AWS A4.3.

A2.3 "G" Classification

A2.3.1 This specification includes filler metals classified as ER70S-G, E70C-G, and E70C-GS. The "G" (multiple pass) or "GS" (single pass) indicates that the filler metal is of a "general" classification. It is general because not all of the particular requirements specified for each of the other classifications are specified for this classification. The intent in establishing these classifications is to provide a means by which filler metals that differ in one respect or another (chemical composition, for example) from all other classifications (meaning that the composition of the filler metal, in the case of the example, does not meet the composition specified for any of the classifications in the specification) can still be classified according to the specification. The purpose is to allow a useful filler metal — one that otherwise would have to await a revision of the specification — to be classified immediately under the existing specification. This means, then, that two filler

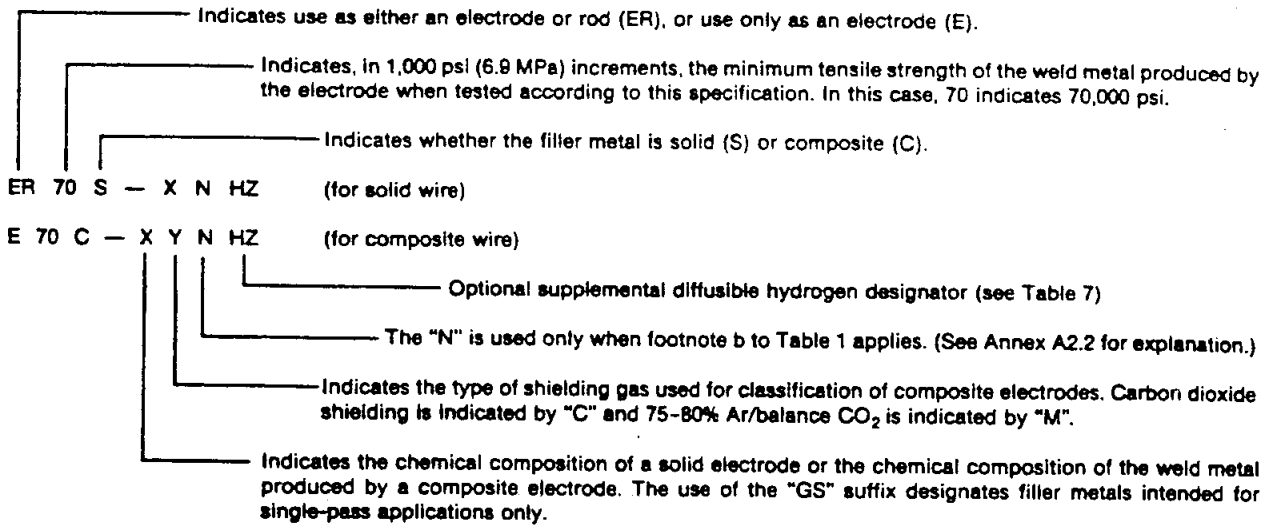

FIG. A1 CLASSIFICATION SYSTEM

metals, each bearing the same "G" classification, may be quite different in some particular respect (chemical composition, again, for example).

A2.3.2 The point of difference (although not necessarily the amount of the difference) referred to above will be readily apparent from the use of the words "not required" and "not specified" in the specification. The use of these words is as follows:

"Not Specified" is used in those areas of the specification that refer to the results of some particular test. It indicates that the requirements for that test are *not specified* for that particular classification.

"Not Required" is used in those areas of the specification that refer to the tests that must be conducted in order to classify a filler metal. It indicates that the test is *not required* because the requirements (results) for the test have not been specified for that particular classification.

Restating the case, when a requirement is not specified, it is not necessary to conduct the corresponding test in order to classify a filler metal to that classification. When a purchaser wants the information provided by that test in order to consider a particular product of that classification for a certain application, they will have to arrange for that information with the supplier of the product. They will have to establish with that supplier just what the testing procedure and the acceptance requirements are to be, for that test. They may want to incorporate that information (via ANSI/AWS A5.01) into the purchase order.

A2.3.3 Request for Filler Metal Classification

A2.3.3.1 When a filler metal cannot be classified according to some classification other than a "G" classification, the manufacturer may request that a classification be established for that filler metal. They may do this by following the procedure given here. When the manufacturer elects to use the "G" classification, the Filler Metal Committee recommends that they still request that a classification be established for that filler metal, as long as the filler metal is of commercial significance.

A2.3.3.2 A request to establish a new filler metal classification must be a written request and it needs to provide sufficient detail to permit the Filler Metal Committee or the subcommittee to determine whether a new classification or the modification of an existing classification is more appropriate, and whether either is necessary to satisfy the need. The request needs to state the variables and their limits, for such a classification or modification. The request should contain some indication of the time by which completion of the new classification or modification is needed.

A2.3.3.3 The request should be sent to the Secretary of the Filler Metal Committee at AWS Headquarters. Upon receipt of the request, the Secretary will

(1) Assign an identifying number to the request. This number shall include the date the request was received.

(2) Confirm receipt of the request and give the identification number to the person who made the request.

(3) Send a copy of the request to the chairman of the Filler Metal Committee and the chairman of the particular subcommittee involved.

(4) File the original request.

(5) Add the request to the log of outstanding requests.

A2.3.3.4 All necessary action on each request will be completed as soon as possible. If more than 12 months lapse, the secretary shall inform the requestor of the status of the request, with copies to the chairman of the committee and the subcommittee. Requests still outstanding after 18 months shall be considered not to have been answered in a "timely manner" and the secretary shall report these to the chairman of the Filler Metal Committee for the chairman's actions.

A2.3.3.5 The secretary shall include a copy of the log of all requests pending and those completed during the preceding year with the agenda for each Filler Metal Committee meeting. Any other publication of requests that have been completed will be at the option of the American Welding Society, as deemed appropriate.

A3. Acceptance

Acceptance of all welding materials classified under this specification is in accordance with ANSI/AWS A5.01, *Filler Metal Procurement Guidelines,* as the specification states. Any testing a purchaser requires of the supplier, for material shipped in accordance with this specification, shall be clearly stated in the purchase order, according to the provisions of ANSI/AWS A5.01. In the absence of any such statement in the purchase order, the supplier may ship the material with whatever testing is normally conducted on material of that classification, as specified in Schedule F, Table 1, of ANSI/AWS A5.01. Testing in accordance with any other schedule in that table must be specifically required by the purchase order. In such cases, acceptance of the material shipped will be in accordance with those requirements.

A4. Certification

A4.1 The act of placing the AWS specification and classification designations on the packaging enclosing the product, or the classification identification on the product itself, constitutes the supplier's (manufacturer's) certification that the product meets all of the requirements of the specification.

The only testing requirement implicit in the certification is that the manufacturer has actually conducted the test required by the specification on material that is representative of that being shipped, and that the material met the requirements of the specification. Representative material, in this case, is any production run of that classification using the same formulation. "Certification" is not to be construed to mean that tests of any kind were necessarily conducted on samples of the specific material shipped. Tests on such material may or may not have been made. The basis for the certification required by the specification is the classification test of "representative material" cited above, and the "Manufacturer's Quality Assurance System" in ANSI/AWS A5.01.

A4.2 (Optional) At the option and expense of the purchaser, acceptance may be based on the results of any or all of the tests required by this specification made on the GTAW test assembly described in Fig. A2, with the tension specimen as described in Fig. A3 (and the impact specimen described in Fig. 8). Composite electrodes are normally not recommended for GTAW or PAW.

A5. Ventilation During Welding

A5.1 Five major factors govern the quantity of fumes in the atmosphere to which welders and welding operators are exposed during welding:

(1) Dimensions of the space in which welding is done (with special regard to the height of the ceiling)

(2) Number of welders or welding operators working in that space

(3) Rate of evolution of fumes, gases, or dust, according to the materials and processes used

(4) The proximity of the welders or welding operators to the fumes as the fumes issue from the welding zone, and to the gases and dusts in the space in which they are working

(5) The ventilation provided to the space in which the welding is done

A5.2 American National Standard Z49.1, *Safety in Welding and Cutting* (published by the American Welding Society), discusses the ventilation that is required during welding and should be referred to for details. Attention is particularly drawn to the section entitled "Ventilation."

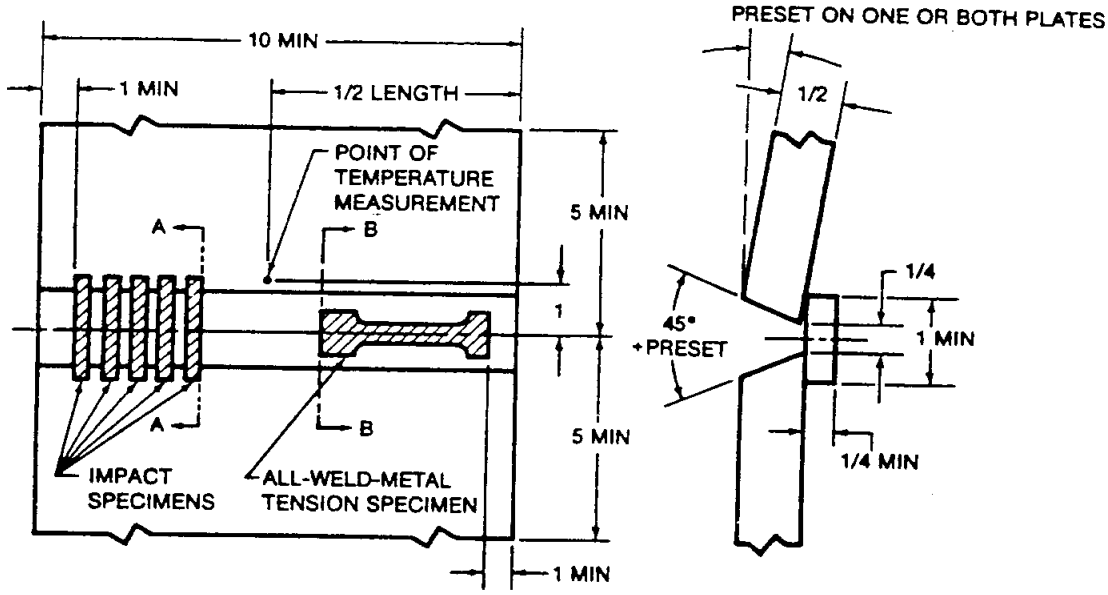

(A) TEST PLATE SHOWING LOCATION OF TEST SPECIMENS

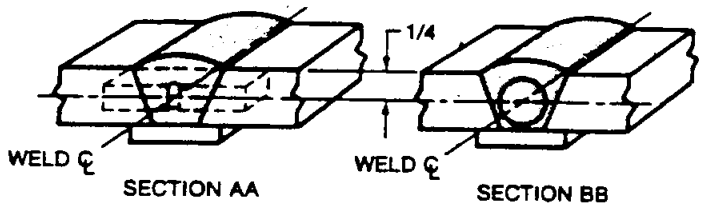

(B) ORIENTATION OF IMPACT SPECIMEN

(C) LOCATION OF ALL-WELD-METAL TENSION SPECIMEN

SI EQUIVALENTS

in.	mm
1/4	6.4
1/2	12.7
1	25
5	125
10	250

Test Conditions		
Standard Size	3/32 in. (2.4 mm)	1/8 in. (3.2 mm)
Shielding Gas	Argon	Argon
Travel Speed	4 to 6 in./min (0.17 to 0.25 mm/sec)	4 to 6 in./min (0.17 to 0.25 mm/sec)
Nominal Arc Voltage	13 to 16 V	16 to 19 V
Nominal Current, DCEN (DCEN = electrode negative)	220 to 250 A	250 to 280 A
Preheat Temperature	275°F (136°C) min.	275°F (135°C) min.
Interpass Temperature	325°F (164°C) max.	325°F (164°C) max.

Notes:
a. All dimensions (excluding angles) are in inches.
b. Prior to welding, the assembly may be preset as shown so that the welded joint will be sufficiently flat to facilitate test specimen removal. As an alternative, restraint or a combination of restraint and preset may be used.
c. If sizes other than those shown above are used, nominal current and arc voltage shall be changed as needed.

FIG. A2 OPTIONAL GTAW GROOVE TEST WELD ASSEMBLY FOR MECHANICAL PROPERTIES AND SOUNDNESS

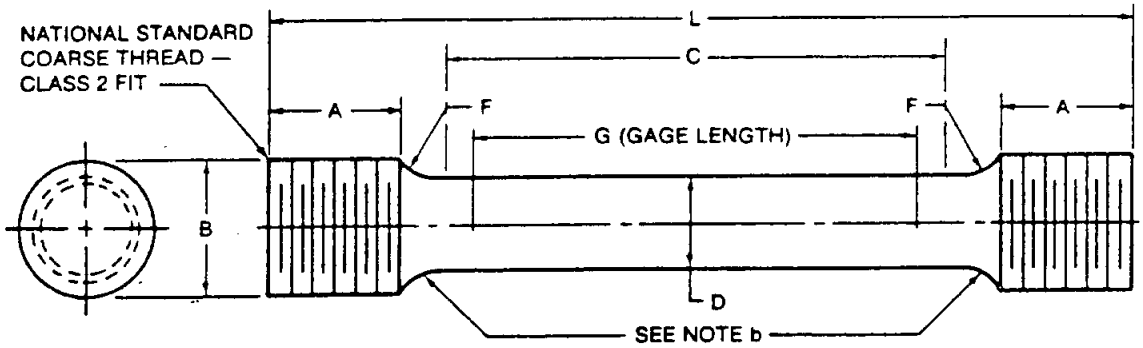

SI EQUIVALENTS

in.	mm
0.005	0.13
0.007	0.18
0.25	6.4
0.350	8.90
1/2	12.7
1.400	35.5
1-3/4	44.0

Dimensions of Specimen, in.

D	G	C	B	F, min.
0.350 ± 0.007	1.400 ± 0.005	1-3/4	1/2	0.25

Notes:
a. Dimensions G and C shall be as shown, but ends may be of any shape to fit the testing machine holders as long as the load is axial.
b. The diameter of the specimen within the gage length shall be slightly smaller at the center than at the ends. The difference shall not exceed one percent of the diameter.
c. When the extensometer is required to determine yield strength, dimension C may be increased. However, the percent of the elongation shall be based on dimension G.
d. The surface finish within the C dimension shall be no rougher than 64 μin. (1.6 μm).

FIG. A3 OPTIONAL TENSION TEST SPECIMEN FOR GAS TUNGSTEN ARC WELDING

A6. Welding Considerations

A6.1 Gas metal arc welding can be divided into three categories based on the mode of metal transfer employed. These modes are (1) spray (conventional or pulsed), (2) globular, and (3) short circuiting transfer. In the spray, pulsed spray, and globular modes, transfer occurs as distinct droplets that are detached from the electrode, transferring along the arc column into the weld pool. In the short circuiting mode, the metal is deposited during frequent short circuiting of the electrode in the molten pool.

A6.2 Spray Transfer

A6.2.1 The spray transfer mode, for carbon steel, is most commonly obtained with argon shielding gas mixture with up to 5% of oxygen or 15% carbon dioxide. A characteristic of this shielding gas is the smooth arc plasma through which hundreds of very fine droplets are transferred to the weld pool each second.

A6.2.2 Spray transfer with argon-oxygen or argon-carbon dioxide shielding gas is, primarily, a function of current density, polarity, and resistance heating of the electrode. The high droplet rate (approximately 250 droplets per second) develops suddenly above a critical current level, commonly referred to as the transition current (for each size of electrode). Below this current, the metal is transferred in drops generally larger in diameter than the electrode at a rate from 10 to 20 per second (globular transfer). The transition current is also dependent, to some extent, on the chemical composition of the electrode. For $\frac{1}{16}$ in. (1.6 mm)

diameter carbon steel electrodes, a transition current of 270 amperes [direct current, electrode positive (dcep)] is common. Alternating current is not recommended for this type of welding because it does not produce a stable arc.

A6.2.3 Pulsed Spray. Metal transfer in pulsed spray welding is similar to that of the spray arc described above, but it occurs at a lower average current. The lower average current is made possible by rapid pulsing of the welding current between a high level, where metal will transfer rapidly in the spray mode, and a low level, where no transfer will take place. At a typical rate of 60 to 120 pulses per second, a melted drop is formed by the low current arc, then "squeezed off" by the high current pulse. This permits all-position welding.

A6.3 Globular Transfer. The mode of transfer that characterizes 100% CO_2 as a shielding gas is globular. Common practice with globular transfer is to use low arc voltage to minimize spatter. This buries the arc and produces deep penetration. Electrodes of 0.045 and $^1/_{16}$ in. (1.1 and 1.6 mm) diameter normally are used at welding currents in the range of 275 to 400 amperes (dcep), for this type of transfer. The rate at which droplets (globules) are transferred ranges from 20 to 70 per second, depending on the size of the electrode, the amperage, polarity, and arc voltage.

A6.4 Short Circuiting Transfer. This mode of transfer is obtained with small diameter electrodes [0.030 to 0.045 in. (0.8 to 1.1 mm)] using lower arc voltages and amperages, and a power source designed for short circuiting transfer. The electrode short-circuits to the weld metal, usually at a rate from 50 to 200 times per second. Metal is transferred with each short circuit, but not across the arc. Short circuiting gas metal arc welding of carbon steel is done most commonly with mixtures of argon and CO_2 as the shielding gas or with CO_2 alone. The penetration of such welds is greater with CO_2 than it is with argon-CO_2 mixtures. Mixtures of 50 to 80% argon (remainder CO_2) can be advantageous for thin material. They provide low penetration, higher short circuiting rates, and lower minimum currents and voltages than CO_2 alone does. This can be an advantage in welding thin plate.

A7. Description and Intended Use of Electrodes and Rods

A7.1 ER70S-2. Electrodes and rods of the ER70S-2 classification are primarily used for single-pass welding of killed, semi-killed, and rimmed steels, but may be used for some multipass applications. Because of the added deoxidants, these filler metals can be used for welding steels that have a rusty or dirty surface, with a possible sacrifice of weld quality depending on the condition of the surface. Typical specifications for these steels are ASTM A36, A285-C, A515-55 and A516-70, which have UNS numbers K02600, K02801, K02001, and K02700, respectively.

A7.2 ER70S-3. Electrodes and rods of the ER70S-3 classification are intended for welding single-pass and multiple-pass welds. Typical base metal specifications are often the same as those for the ER70S-2 classification.

A7.3 ER70S-4. Electrodes and rods of the ER70S-4 classification are intended for welding steel where conditions require more deoxidation than is provided by the ER70S-3 filler metal. Typical base metal specifications are often the same as those for the ER70S-2 classification. This classification does not require impact testing.

A7.4 ER70S-5. Electrodes and rods of the ER70S-5 classification are intended for welding steel with CO_2 shielding and high welding currents. They can be used for steels with a slightly rusty surface, with perhaps some sacrifice of weld quality, depending on the condition of the surface. Typical base metal specifications are often the same as those for the ER70S-2 classification. This classification does not require impact testing.

A7.5 ER70S-6. Electrodes and rods of the ER70S-6 classification are intended for both single- and multiple-pass welding. They are especially suited for sheet metal applications, where smooth weld beads are desired, and structural and plate steels that have moderate amounts of rust or mill scale. These electrodes withstand high currents with CO_2 shielding, even when welding rimmed steels. Typical base metal specifications are often the same as those for the ER70S-2 classification.

A7.6 ER70S-7. Electrodes and rods of the ER70S-7 classification are intended for single- and multiple-pass welding. They may permit welding with higher travel speeds compared with ER70S-3 filler metals. They also provide somewhat better wetting action and bead appearance when compared with those filler metals. Typical base metal specifications are often the same as those for the ER70S-2 classification.

A7.7 ER70S-G and E70C-G. Electrodes and rods of the ER70S-G and electrodes of the E70C-G classification are those filler metals not included in the preceding classes and for which only certain mechanical property requirements are specified. The electrodes are

intended for both single- and multi-pass applications. The filler metal supplier should be consulted for the composition, properties, characteristics, and intended use of these classifications (see A2.3 for further information).

A7.8 E70C-GS. Electrodes of the E70C-GS classification are composite stranded or metal cored electrodes intended for only single-pass applications. The electrodes may be classified with either CO_2 or 75–80% Ar/balance CO_2 as shown by the "C" or "M" suffix. Absence of the C or M suffix means that the shielding gas is not specified. The filler metal suppplier should be consulted for the properties, characteristics, and intended use of these classifications. These electrodes may have higher alloy contents which improve single-pass applications (such as tolerance to mill scale, etc.) but could preclude their use on multiple-pass applications due to higher alloy recovery.

A7.9 E70C-3 and E70C-6. Electrodes of the E70C-3 and E70C-6 classifications are composite stranded or metal cored electrodes intended for both single- and multiple-pass applications. They are characterized by a spray arc and excellent bead wash characteristics. The electrodes may be classified with either CO_2 or 75–80% Ar/balance CO_2 as shown by the "C" or "M" suffix. Classification E70C-3 requires impacts at 0°F (−18°C) while E70C-6 requires impacts at −20°F (−29°C).

A8. Special Tests

A8.1 It is recognized that supplementary tests may be required to determine the suitability of these filler metals for certain applications involving properties not considered in this specificaiton. In such cases, additional tests to determine specific properties of the weld metal, such as hardness, corrosion resistance, mechanical properties at higher or lower service temperatures, may be required. Thse tests may be conducted as agreed between supplier and purchaser. ANSI/AWS A5.01 contains provisions for ordering such tests.

A8.2 Diffusible Hydrogen. Solid, composite stranded, and composite metal cored GMAW electrodes are generally considered to be low-hydrogen consumables. When joining carbon steels containing 0.30% or less carbon (such as those listed in Table 6), hydrogen assisted cracking is unlikely to be of concern with the electrodes of this specification. However, it is also likely that these electrodes will see service in joining carbon steel to low alloy, high-strength steels in which weld metal or heat-affected zone cracking associated with diffusible hydrogen tends to become more of a problem with increasing weld metal strength, increasing heat-affected zone hardness, increasing diffusible hydrogen content, decreasing preheat and interpass temperature, and decreasing time at or above the interpass temperature during and after welding. This cracking is usually delayed some hours after cooling. It may appear as transverse weld cracks, longitudinal cracks (especially in root beads), and toe or underbead cracks in the heat-affected zone.

Since the available diffusible hydrogen level strongly influences the tendency towards hydrogen-assisted cracking, it may be desirable to measure the diffusible hydrogen content resulting from a particular electrode. Accordingly, the use of optional supplemental designators for diffusible hydrogen is introduced to indicate the maximum average value obtained under a clearly defined test condition in ANSI/AWS A4.3, *Standard Methods for Determination of the Diffusible Hydrogen Content of Martensitic, Bainitic, and Ferritic Steel Weld Metal Produced by Arc Welding.*

Electrodes that are designated as meeting the lower or lowest hydrogen limits, as specified in Table 7, are also understood to meet any higher electrode hydrogen limits, even though these are not necessarily designated along with the electrode classification. Therefore, for example an electrode designated as "H4" also meets the "H8" and "H16" requirements without being designated as such.

The user of this information is cautioned that actual fabrication conditions may result in different diffusible hydrogen values than those indicated by the designator.

The use of a reference atmospheric condition during welding is necessary because the arc is always imperfectly shielded. Moisture from the air, distinct from that in the electrode or gas, can enter the arc and subsequently the weld pool, contributing to the resulting observed diffusible hydrogen. The effect can be minimized by maintaining a suitable gas flow rate and as short an arc length as possible consistent with a steady arc. At times, some air will mix with the gas and add its moisture to the other sources of diffusible hydrogen. It is possible for this extra diffusible hydrogen to significantly affect the outcome of a diffusible hydrogen test. For this reason, it is appropriate to specify a reference atmospheric condition. The reference atmospheric condition of 10 grains of moisture per pound (1.43 grams per kilogram) of dry air is equivalent to 10% relative humidity at 70°F (21°C) at 29.92 in. Hg (760 mm) barometric pressure. Actual conditions, measured using a calibrated psychrometer, that equal or exceed this reference condition provide assurance

that the conditions during welding will not diminish the final results of the test.

A9. Discontinued Classifications

The following classifications have been discontinued over the life of this specification:

Discontinued Classification	Last Published	Discontinued Classification	Last Published
E-60S-1	1965	E70S-1	1969
E-60S-2	1965	E70S-1B[b]	1969
E-60S-3	1965	E70S-2[c]	1969
E-70T-1[a]	1965	E70S-3[c]	1969
E-70T-2[a]	1965	E70S-4[c]	1969
E-70T-3[a]	1965	E70S-5[c]	1969
E-70T-4[a]	1965	E70S-6[c]	1969
E-70T-5[a]	1965	E70S-G[c]	1969
E-70T-G[a]	1965	E70U-1	1969

NOTES:

a. These flux-cored electrode classifications were transferred to AWS A5.20-69 and continue to be included in the revisions to that specification.

b. This electrode classification was transferred to the new AWS A5.28 specification where it is classified as ER80S-D2.

c. These electrode classifications were changed to the new classification ER70S-X and remain in the current revision of the specification as such.

A10. Safety Information

A10.1 Burn Protection. Molten metal, sparks, slag, and hot work surfaces are produced by welding, cutting, and allied processes. These can cause burns if precautionary measures are not used. Workers should wear protective clothing made of fire-resistant material. Pant cuffs, open pockets, or other places on clothing that can catch and retain molten metal or sparks should not be worn. High-top shoes or leather leggings and fire-resistant gloves should be worn. Pant legs should be worn over the outside of high-top shoes. Helmets or hand shields that provide protection for the face, neck, and ears, and a head covering to protect the head should be used. In addition, appropriate eye protection should be used.

When welding overhead or in confined spaces, ear plugs to prevent weld spatter from entering the ear canal should be worn in combination with goggles or equivalent to give added eye protection. Clothing should be kept free of grease and oil. Combustible materials should not be carried in pockets. If any combustible substance has been spilled on clothing, a change to clean, fire-resistant clothing should be made before working with open arcs or flame. Aprons, cape-sleeves, leggings, and shoulder covers with bibs designed for welding service should be used.

Where welding or cutting of unusually thick base metal is involved, sheet metal shields should be used for extra protection. Mechanization of highly hazardous processes or jobs should be considered. Other personnel in the work area should be protected by the use of noncombustible screens or by the use of appropriate protection as described in the previous paragraph.

Before leaving a work area, hot workpieces should be marked to alert other persons of this hazard. No attempt should be made to repair or disconnect electrical equipment when it is under load. Disconnection under load produces arcing of the contacts and may cause burns or shock, or both. (*Note: Burns can be caused by touching hot equipment such as electrode holders, tips, and nozzles. Therefore, insulated gloves should be worn when these items are handled, unless an adequate cooling period has been allowed before touching.*)

The following sources are for more detailed information on personal protection:

(1) American National Standards Institute. ANSI/ASC Z41.1, *Safety-Toe Footwear.* New York: American National Standards Institute.[6]

(2) ANSI/ASC Z49.1, *Safety in Welding and Cutting,* Miami, FL: American Welding Society.

(3) ANSI/ASC Z87.1, *Practice for Occupational and Educational Eye and Face Protection,* New York: American National Standards Institute.

(4) Occupational Safety and Health Administration. *Code of Federal Regulations,* Title 29 Labor, Chapter XVII, Part 1910. Washington, DC: U.S. Government Printing Office.[7]

A10.2 Electrical Hazards. Electric shock can kill; however, it can be avoided. Live electrical parts should not be touched. The manufacturer's instructions and recommended safe practices should be read and understood. Faulty installation, improper grounding, and incorrect operation and maintenance of electrical equipment are all sources of danger.

All electrical equipment and the workpieces should be grounded. The workpiece lead is not a ground lead. It is used only to complete the welding circuit. A separate connection is required to ground the workpiece. The workpiece should not be mistaken for a ground connection.

[6] ANSI documents are available from the American National Standards Institute, 11 West 42 Street, New York, NY 10036.

[7] OSHA documents are available from U.S. Government Printing Office, Washington, DC 20402.

The correct cable size should be used, since sustained overloading will cause cable failure and result in possible electrical shock or fire hazard. All electrical connections should be tight, clean, and dry. Poor connections can overheat and even melt. Further, they can produce dangerous arcs and sparks. Water, grease, or dirt should not be allowed to accumulate on plugs, sockets, or electrical units. Moisture can conduct electricity.

To prevent shock, the work area, equipment, and clothing should be kept dry at all times. Welders should wear dry gloves and rubber-soled shoes, or stand on a dry board or insulated platform. Cables and connections should be kept in good condition. Improper or worn electrical connections may create conditions that could cause electrical shock or short circuits. Worn, damaged, or bare cables should not be used. Open-circuit voltage should be avoided. When several welders are working with arcs of different polarities, or when a number of alternating current machines are being used, the open-circuit voltages can be additive. The added voltages increase the severity of the shock hazard.

In case of electric shock, the power should be turned off. If the rescuer must resort to pulling the victim from the live contact, nonconducting materials should be used. If the victim is not breathing, cardiopulmonary resuscitation (CPR) should be administered as soon as contact with the electrical source is broken. A physician should be called and CPR continued until breathing has been restored, or until a physician has arrived. Electrical burns are treated as thermal burns; that is, clean, cold (iced) compresses should be applied. Contamination should be avoided; the area should be covered with a clean, dry dressing; and the patient should be transported to medical assistance.

Recognized safety standards such as ANSI/ASC Z49.1, *Safety in Welding and Cutting,* and NFPA No. 70, *National Electrical Code*,[8] should be followed.

A10.3 Fumes and Gases. Many welding, cutting, and allied processes produce fumes and gases which may be harmful to health. Fumes are solid particles which originate from welding filler metals and fluxes, the base metal, and any coatings present on the base metal. Gases are produced during the welding process or may be produced by the effects of process radiation on the surrounding environment. Management, personnel and welders alike should be aware of the effects of these fumes and gases. The amount and composition of these fumes and gases depend upon the composition of the filler metal and base metal, welding process, flux, current level, arc length, and other factors.

The possible effects of over-exposure range from irritation of eyes, skin, and respiratory system to more severe complications. Effects may occur immediately or at some later time. Fumes can cause symptoms such as nausea, headaches, dizziness, and metal fume fever. The possibility of more serious health effects exists when especially toxic materials are involved. In confined spaces, the shielding gases and fumes might displace breathing air and cause asphyxiation. One's head should always be kept out of the fumes. Sufficient ventilation, exhaust at the arc or flame, or both, should be used to keep fumes and gases from your breathing zone and the general area.

In some cases, natural air movement will provide enough ventilation. Where ventilation may be questionable, air sampling should be used to determine if corrective measures should be applied.

More detailed information on fumes and gases produced by the various welding processes may be found in the following:

(1) The permissible exposure limits required by OSHA can be found in *Code of Federal Regulations*, Title 29, Chapter XVII, Part 1910.

(2) The recommended threshold limit values for these fumes and gases may be found in *Threshold Limit Values for Chemical Substances and Physical Agents in the Workroom Environment.*[9]

(3) The results of an AWS-funded study are available in a report entitled, *Fumes and Gases in the Welding Environment,* available from the American Welding Society.

(4) Manufacturer's Material Safety Data Sheet for the product.

A10.4 Radiation. Welding, cutting, and allied operations may produce radiant energy (radiation) harmful to health. One should become acquainted with the effects of this radiant energy.

Radiant energy may be ionizing (such as X-rays), or non-ionizing (such as ultraviolet, visible light, or infrared). Radiation can produce a variety of effects such as skin burns and eye damage, depending on the radiant energy's wavelength and intensity, if excessive exposure occurs.

A10.4.1 Ionizing Radiation. Ionizing radiation is produced by the electron beam welding process. It is

[8] Available from the National Fire Protection Association, Batterymarch Park, Quincy, MA 02269.

[9] Published by the American Conference of Governmental Industrial Hygienists (ACGIH), 6550 Glenway Avenue, Building D-5, Cincinnati, OH 45211.

ordinarily controlled within acceptance limits by use of suitable shielding enclosing the welding area.

A10.4.2 Non-Ionizing Radiation. The intensity and wavelengths of non-ionizing radiant energy produced depend on many factors, such as the process, welding parameters, electrode and base metal composition, fluxes, and any coating or plating on the base metal. Some processes such as resistance welding and cold pressure welding ordinarily produce negligible quantities of radiant energy. However, most arc welding and cutting processes (except submerged arc when used properly), laser welding and torch welding, cutting, brazing, or soldering can produce quantities of non-ionizing radiation such that precautionary measures are necessary.

Protection from possible harmful effects caused by non-ionizing radiant energy from welding include the following measures:

(1) One should not look at welding arcs except through welding filter plates which meet the requirements of ANSI/ASC Z87.1, *Practice for Occupational and Educational Eye and Face Protection,* published by American National Standards Institute. It should be noted that transparent welding curtains are not intended as welding filter plates, but rather are intended to protect a passerby from incidental exposure.

(2) Exposed skin should be protected with adequate gloves and clothing as specified in ANSI/ASC Z49.1, *Safety in Welding and Cutting,* published by American Welding Society.

(3) Reflections from welding arcs should be avoided, and all personnel should be protected from intense reflections. (*Note: Paints using pigments of substantially zinc oxide or titanium dioxide have a lower reflectance for ultraviolet radiation.)*

(4) Screens, curtains, or adequate distance from aisles, walkways, etc., should be used to avoid exposing passersby to welding operations.

(5) Safety glasses with UV protective side shields have been shown to provide some beneficial protection from ultraviolet radiation produced by welding arcs.

A10.4.3 Ionizing radiation information sources include the following:

(1) AWS F2.1-78, *Recommended Safe Practices for Electron Beam Welding and Cutting,* available from the American Welding Society.

(2) Manufacturer's product information literature.

A10.4.4 Non-ionizing radiation information sources include:

(1) American National Standards Institute. ANSI/ASC Z136.1, *Safe use of lasers,* New York, NY: American National Standards Institute.

(2) ANSI/ASC Z87.1, *Practice for occupational and educational eye and face protection.* New York, NY: American National Standards Institute.

(3) ANSI/ASC Z49.1, *Safety in Welding and Cutting.* (Published by AWS) Miami, FL: American Welding Society.

(4) Hinrichs, J. F., "Project Committee on Radiation—Summary report," *Welding Journal,* January, 1978.

(5) Moss, C. E. "Optical Radiation Transmission Levels Through Transparent Welding Curtains," *Welding Journal,* March 1979.

(6) Moss, C. E. and Murray, W. E., "Optical Radiation Levels Produced in Gas Welding, Torch Brazing, and Oxygen Cutting," *Welding Journal,* September 1979.

(7) Marshall, W. J., Sliney, D. H., and others. "Optical radiation levels produced by air-carbon arc cutting processes," *Welding Journal,* March 1980.

(8) National Technical Information Service. Non-ionizing radiation protection special study no. 42-0053-77, "Evaluation of the potential hazards from actinic ultraviolet radiation generated by electric welding and cutting arcs." Springfield, VA: National Technical Information Service, ADA-033768.

(9) Non-ionizing radiation protection special study no. 42-0312-77, "Evaluation of the potential retina hazards from optical radiation generated by electrical welding and cutting arcs." Springfield, VA: National Technical Information Service, ADA-043023.

SPECIFICATION FOR CARBON STEEL ELECTRODES FOR FLUX CORED ARC WELDING

SFA-5.20

(Identical with AWS Specification A5.20-95)

1. Scope

This specification prescribes requirements for the classification of carbon steel electrodes for flux cored arc welding.

PART A — GENERAL REQUIREMENTS

2. Classification

2.1 The electrodes covered by this specification are classified according to the following:

(1) The as-welded mechanical properties of the weld metal, as specified in Table 1

(2) Certain usability characteristics of the electrode (including the presence or absence of shielding gas), as specified in Table 2

(3) The positions of welding for which the electrodes are suitable, as specified in Table 2

2.2 Electrodes classified under one classification shall not be classified under any other classification in this specification except for the EXXT-1, EXXT-1M, EXXT-9, EXXT-9M, EXXT-12, and EXXT-12M classifications. In addition, an electrode classified with 100% CO_2 shielding gas may also be classified with the "M" designator. The "M" designator means that the electrode has been classified with a 75-80% argon/balance CO_2 gas mixture.

2.3 The electrodes classified under this specification are intended for flux cored arc welding either with or without an external shielding gas. Electrodes intended for use without external shielding gas, or with the shielding gas as specified in Table 2, are not prohibited from use with any other process or shielding gas for which they are found suitable.

3. Acceptance

Acceptance[1] of the welding electrodes shall be in accordance with the provisions of ANSI/AWS A5.01, *Filler Metal Procurement Guidelines.*

4. Certification

By affixing the AWS specification and classification designations to the packaging, or the classification designations to the product, the manufacturer certifies that the product meets the requirements of this specification.[2]

5. Units of Measure and Rounding-Off Procedure

5.1 U.S. customary units are the standard units of measure in this specification. The SI units are given as equivalent values to the U.S. customary units. The standard sizes and dimensions in the two systems are not identical and, for this reason, conversion from a standard size or dimension in one system will not always coincide with a standard size or dimension in the other. Suitable conversions, encompassing standard sizes of both, can be made, however, if appropriate tolerances are applied in each case.

5.2 For the purpose of determining conformance with this specification, an observed or calculated value shall be rounded to the nearest 1000 psi for tensile and yield strength, and to the "nearest unit" in the last

[1] See Section A3, Acceptance (in the Appendix), for further information concerning acceptance, testing of the material shipped, and ANSI/AWS A5.01, *Filler Metal Procurement Guidelines.*

[2] See Section A4, Certification (in the Appendix), for further information concerning certification and the testing called for to meet this requirement.

TABLE 1
AS-WELDED MECHANICAL PROPERTY REQUIREMENTS[a]

AWS Classification	Tensile Strength ksi	Tensile Strength MPa	Yield Strength[b] ksi	Yield Strength[b] MPa	Percent Elongation[c]	Charpy V-Notch Impact Energy[d]
E7XT-1, -1M[d]	70	480	58	400	22	20 ft·lbf at 0°F (27 J at −18°C)
E7XT-2, -2M[e]	70	480	Not Specified		Not Specified	Not Specified
E7XT-3[e]	70	480	Not Specified		Not Specified	Not Specified
E7XT-4	70	480	58	400	22	Not Specified
E7XT-5, -5M[d]	70	480	58	400	22	20 ft·lbf at −20°F (27 J at −29°C)
E7XT-6[d]	70	480	58	400	22	20 ft·lbf at −20°F (27 J at −29°C)
E7XT-7	70	480	58	400	22	Not Specified
E7XT-8[d]	70	480	58	400	22	20 ft·lbf at −20°F (27 J at −29°C)
E7XT-9, -9M[d]	70	480	58	400	22	20 ft·lbf at − 20°F (27 J at −29°C)
E7XT-10[e]	70	480	Not Specified		Not Specified	Not Specified
E7XT-11	70	480	58	400	20	Not Specified
E7XT-12, -12M[d]	70 to 90	480 to 620	58	400	22	20 ft·lbf at −20°F (27 J at −29°C)
E6XT-13[e]	60	415	Not Specified		Not Specified	Not Specified
E7XT-13[e]	70	480	Not Specified		Not Specified	Not Specified
E7XT-14[e]	70	480	Not Specified		Not Specified	Not Specified
E6XT-G	60	415	48	330	22	Not Specified
E7XT-G	70	480	58	400	22	Not Specified
E6XT-GS[e]	60	415	Not Specified		Not Specified	Not Specified
E7XT-GS[e]	70	480	Not Specified		Not Specified	Not Specified

NOTES:
a. Single values are minimums.
b. 0.2% offset.
c. In 2 in. (50 mm) gage length (see Section 11). In 1 in. (25 mm) gage length for 0.045 in. (1.1 mm) and smaller sizes of EXXT-11 classification.
d. Electrodes with the following optional supplemental designations shall meet the lower temperature impact requirements specified below:

AWS Classification	Electrode Designation	Charpy V-Notch Impact Requirements
E7XT-1, -1M	E7XT-1J, -1MJ	20 ft·lbf at −40°F (27 J at −40°C)
E7XT-5, -5M	E7XT-5J, -5MJ	20 ft·lbf at −40°F (27 J at −40°C)
E7XT-6	E7XT-6J	20 ft·lbf at −40°F (27 J at −40°C)
E7XT-8	E7XT-8J	20 ft·lbf at −40°F (27 J at −40°C)
E7XT-9, -9M	E7XT-9J, -9MJ	20 ft·lbf at −40°F (27 J at −40°C)
E7XT-12, -12M	E7XT-12J, -12MJ	20 ft·lbf at −40°F (27 J at −40°C)

e. These classifications are intended for single pass welding. They are not for multiple pass welding. Only tensile strength is specified and, for this reason, only transverse tension and longitudinal guided bend tests are required (see Table 3).

TABLE 2
POSITION OF WELDING, SHIELDING, POLARITY, AND APPLICATION REQUIREMENTS

AWS Classification	Position of Welding[a,b]	External Shielding[c]	Polarity[d]	Application[e]
E70T-1	H and F	CO_2	DCEP	M
E70T-1M	H and F	75–80% Ar/bal CO_2	DCEP	M
E71T-1	H, F, VU, OH	CO_2	DCEP	M
E71T-1M	H, F, VU, OH	75–80% Ar/bal CO_2	DCEP	M
E70T-2	H and F	CO_2	DCEP	S
E70T-2M	H and F	75–80% Ar/bal CO_2	DCEP	S
E71T-2	H, F, VU, OH	CO_2	DCEP	S
E71T-2M	H, F, VU, OH	75–80% Ar/bal CO_2	DCEP	S
E70T-3	H and F	None	DCEP	S
E70T-4	H and F	None	DCEP	M
E70T-5	H and F	CO_2	DCEP	M
E70T-5M	H and F	75–80% Ar/bal CO_2	DCEP	M
E71T-5	H, F, VU, OH	CO_2	DCEP or DCEN[f]	M
E71T-5M	H, F, VU, OH	75–80% Ar/bal CO_2	DCEP or DCEN[f]	M
E70T-6	H and F	None	DCEP	M
E70T-7	H and F	None	DCEN	M
E71T-7	H, F, VU, OH	None	DCEN	M
E70T-8	H and F	None	DCEN	M
E71T-8	H, F, VU, OH	None	DCEN	M
E70T-9	H and F	CO_2	DCEP	M
E70T-9M	H and F	75–80% Ar/bal CO_2	DCEP	M
E71T-9	H, F, VU, OH	CO_2	DCEP	M
E71T-9M	H, F, VU, OH	75–80% Ar/bal CO_2	DCEP	M
E70T-10	H and F	None	DCEN	S
E70T-11	H and F	None	DCEN	M
E71T-11	H, F, VD, OH	None	DCEN	M
E70T-12	H and F	CO_2	DCEP	M
E70T-12M	H and F	75–80% Ar/bal CO_2	DCEP	M
E71T-12	H, F, VU, OH	CO_2	DCEP	M
E71T-12M	H, F, VU, OH	75–80% Ar/bal CO_2	DCEP	M
E61T-13	H, F, VD, OH	None	DCEN	S
E71T-13	H, F, VD, OH	None	DCEN	S
E71T-14	H, F, VD, OH	None	DCEN	S
EX0T-G[g]	H and F	Not Specified	Not Specified	M
EX1T-G[g]	H, F, VD or VU, OH	Not Specified	Not Specified	M
EX0T-GS[g]	H and F	Not Specified	Not Specified	S
EX1T-GS[g]	H, F, VD or VU, OH	Not Specified	Not specified	S

NOTES:

a. H = horizontal position; F = flat position; OH = overhead position; VD = vertical position with downward progression; VU = vertical position with upward progression

b. Electrode sizes suitable for out-of-position welding, i.e., welding positions other than flat or horizontal, usually are those sizes that are smaller than the 3/32 in. (2.4 mm) size or nearest size called for in 8.4.1 for the groove weld. For that reason, electrodes meeting the requirements for the groove weld tests and the fillet weld tests may be classified as EX1T-X or EX1T-XM (where X represents the tensile strength and usability designators) regardless of their size. See Section A7 and Figure A1 in the Annex for more information.

c. Properties of weld metal from electrodes that are used with external gas shielding (EXXT-1, EXXT-1M, EXXT-2, EXXT-2M, EXXT-5, EXXT-5M, EXXT-9, EXXT-9M, EXXT-12, and EXXT-12M) vary according to the shielding gas employed. Electrodes classified with the specified shielding gas should not be used with other shielding gases without first consulting the manufacturer of the electrode.

d. The term "DCEP" refers to direct current electrode positive (dc, reverse polarity).
The term "DCEN" refers to direct current electrode negative (dc, straight polarity).

e. M = single or multiple pass; S = single pass only (see Section A7 in the Annex for more information).

f. Some E71T-5 and E71T-5M electrodes may be recommended for use on DCEN for improved out-of-position welding. Consult the manufacturer for the recommended polarity.

g. The letter "X" can be replaced with either a "6" or "7" to designate the weld metal's tensile strength.

right-hand place of figures used in expressing the limiting value for other quantities in accordance with the rounding-off method given in ASTM E29, *Standard Practice for Using Significant Digits in Test Data to Determine Conformance With Specifications.*

PART B — TESTS, PROCEDURES, AND REQUIREMENTS

6. Summary of Tests

The tests required for classification determination are specified in Table 3. The purpose of these tests is to determine the mechanical properties, soundness, and chemical composition of the weld metal, and the usability of the electrode. The base metal for the weld test assemblies, the welding and testing procedures to be employed, and the results required are given in Sections 8 through 14.

The supplemental test for diffusible hydrogen in Section 15 is not required for classification, but is included for an optional electrode designation as agreed to between the purchaser and supplier. Another optional supplemental designator (J) may be used to indicate Charpy impact testing at lower-than-standard temperature.

7. Retest

If any test fails to meet the requirement, that test shall be repeated twice. The results of both retests shall meet the requirement. Specimens for the retest may be taken from the original test assembly or from a new test assembly. For chemical analysis, retest need be only for those specific elements that failed to meet the test requirements.

8. Weld Test Assemblies

8.1 Two or three weld test assemblies are required, depending on the classification of the electrode and the manner in which the tests are conducted. They are as follows:

(1) The weld pad shown in Fig. 1 for chemical analysis of the undiluted weld metal

(2) The groove welds shown in Figs. 2A and 2B for mechanical properties and, where required, for soundness of the weld metal (Fig. 2A for multiple-pass electrodes and 2B for single-pass electrodes)

(3) the fillet weld shown in Fig. 3, for usability of the electrode

The sample for chemical analysis may be taken from the reduced section of the fractured tension test specimen or from a corresponding location (or any location above it) in the weld metal in the groove weld in Fig. 2A, thereby avoiding the need to make the weld pad. In case of dispute, the weld pad shall be the referee method.

8.2 Preparation of each weld test assembly shall be as prescribed in 8.3, 8.4, and 8.5. The base metal for each assembly shall be as required in Table 4 and shall meet the requirements of any of the ASTM specifications shown there, or an equivalent specification. Testing of the assemblies shall be as prescribed in Sections 9 through 14.

8.3 Weld Pad. A weld pad shall be prepared as shown in Fig. 1 except when, as permitted in 8.1, the sample for analysis is taken from the groove weld or the fractured tension test specimen. Base metal of any convenient size which will satisfy the minimum requirements of Fig. 1 and is of a type specified in Table 4 shall be used as the base for the weld pad. The surface of the base metal on which the filler metal is deposited shall be clean. The pad shall be welded in the flat position with multiple layers to obtain undiluted weld metal ($\frac{1}{2}$ in. [13 mm] minimum thickness). The electrode size shall be $\frac{3}{32}$ in. (2.4 mm) or the size the manufacturer produces closest to $\frac{3}{32}$ in. (2.4 mm). The preheat temperature shall not be less than 60°F (16°C) and the interpass temperature shall not exceed 325°F (163°C). The slag shall be removed after each pass. The pad may be quenched in water between passes (temperature unimportant). The dimensions of the completed pad shall be as shown in Fig. 1. Testing of this assembly shall be as specified in Section 9, Chemical Analysis.

8.4 Groove Weld

8.4.1 For multiple-pass electrodes (all classifications except E6XT-13, E6XT-GS, E7XT-2, E7XT-2M, E7XT-3, E7XT-10, E7XT-13, E7XT-14, and E7XT-GS, as specified in Table 3), a test assembly using base metal as specified in Table 4 shall be prepared and welded as shown in Fig. 2A. The electrode size shall be $\frac{3}{32}$ in. (2.4 mm), or the size the manufacturer produces that is closest to $\frac{3}{32}$ in. (2.4 mm), and the welding conditions shall be those listed in Tables 2 and 5 for the classification being tested.

Welding shall be in the flat position and the assembly shall be restrained (or preset) during welding to prevent warpage in excess of 5 degrees. An assembly that is warped more than 5 degrees from plane shall be discarded. It shall not be straightened.

TABLE 3
REQUIRED TESTS[a]

AWS Classification[b,c]	Chemical Analysis	Radiographic Test	Tension Test	Bend Test	Impact Test	Fillet Weld Test
EXOT-1, -1M	R	R	R	NR	R	R
EXOT-4	R	R	R	NR	NR	R
EXOT-5, -5M	R	R	R	NR	R	R
EXOT-6	R	R	R	NR	R	R
EXOT-7	R	R	R	NR	NR	R
EXOT-8	R	R	R	NR	R	R
EXOT-9, -9M	R	R	R	NR	R	R
EXOT-11	R	R	R	NR	NR	R
EXOT-12, -12M	R	R	R	NR	R	R
EXOT-G	R	R	R	NR	NR	R
EX1T-1, -1M	R	R	R	NR	R	R
EX1T-4	R	R	R	NR	NR	R
EX1T-5, -5M	R	R	R	NR	R	R
EX1T-6	R	R	R	NR	R	R
EX1T-7	R	R	R	NR	NR	R
EX1T-8	R	R	R	NR	R	R
EX1T-9, -9M	R	R	R	NR	R	R
EX1T-11	R	R	R	NR	NR	R
EX1T-12, -12M	R	R	R	NR	R	R
EX1T-G	R	R	R	NR	NR	R
EXOT-2, -2M[d]	NR	NR	R[e]	R	NR	R
EX1T-2, -2M[d]	NR	NR	R[e]	R	NR	R
EXOT-3[d]	NR	NR	R[e]	R	NR	NR
EXOT-10[d]	NR	NR	R[e]	R	NR	R
EX1T-13[d]	NR	NR	R[e]	R	NR	R
EX1T-14[d]	NR	NR	R[e]	R	NR	R
EXOT-GS[d]	NR	NR	R[e]	R	NR	R
EX1T-GS[d]	NR	NR	R[e]	R	NR	R

NOTES:
a. The letter "R" indicates that the test is required. Where "NR" is shown, the test is not required for that classification. For the fillet weld test, EXOT-X classifications shall be tested in the horizontal position and EX1T-X classifications shall be tested in both the vertical and overhead positions.
b. The 0 and 1 before the "T" refer to the position of welding for which the electrode is suitable. See A2.2.
0 = horizontal and flat position.
1 = all position (smaller than 3/32 in. (2.4 mm) diameter), i.e., flat, horizontal, vertical (downward progression) or vertical (upward progression), and overhead (see Table 2).
c. Electrodes with supplemental toughness and/or diffusible hydrogen requirements may be further identified as shown in Tables 1 and 8.
d. Intended for single-pass welding.
e. Transverse tension test. All others require all-weld-metal tension test.

The test assembly shall be tack welded at room temperature and welding shall begin at that temperature (60°F [16°C] minimum). Welding shall continue until the assembly has reached a temperature of 300 ± 25°F (150 ± 14°C), measured by temperature indicating crayons or surface thermometers at the location shown in Fig. 2A. This interpass temperature shall be maintained for the remainder of the weld. Should it be necessary to interrupt welding, the assembly shall be allowed to cool in still air at room temperature. The assembly shall be heated to a temperature of 300 ± 25°F (150 ± 14°C) before welding is resumed.

When welding has been completed and the assembly has cooled, the assembly shall be prepared and tested, as specified in Section 10, 11.1, and Section 13, in the as-welded condition (except for the aging of the all-weld-metal tension test specimen specified in 11.1).

8.4.2 For single-pass electrodes (classifications E6XT-13, E6XT-GS, E7XT-2, E7XT-2M, E7XT-3, E7XT-10, E7XT-13, E7XT-14, and E7XT-GS, as specified in Table 3), a test assembly using base metal as specified in Table 4 shall be prepared and welded as shown in Fig. 2B. After tack welding the plates at

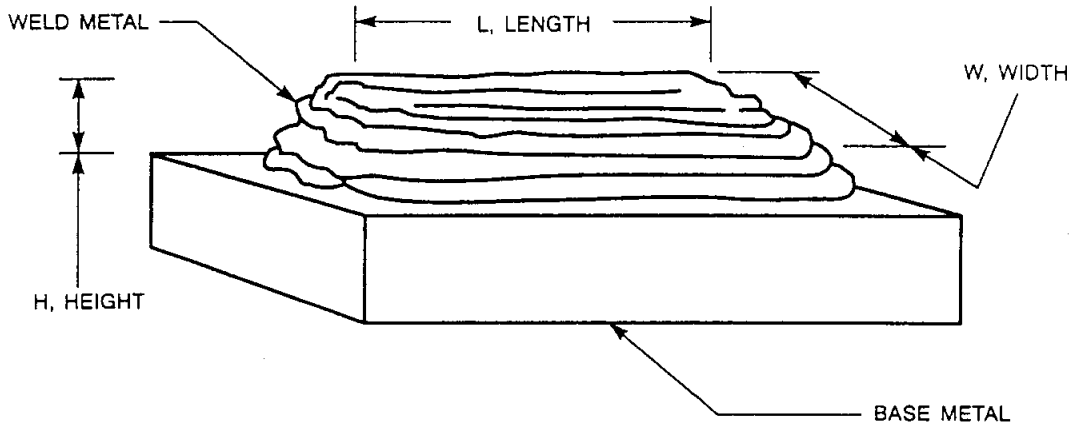

Weld Pad Size, Minimum					
Length, L		Width, W		Height, H	
in.	mm	in.	mm	in.	mm
1-1/2	38	1/2	13	1/2	13

Notes:
1. Base metal of any convenient size, of the type specified in Table 4, shall be used as the base for the weld pad.
2. The surface of the base metal on which the filler metal is to be deposited shall be clean.
3. The pad shall be welded in the flat position with successive layers to obtain undiluted weld metal.
4. The number and size of the beads will vary according to the size of the electrode and the width of the weave as well as with the amperage employed.
5. The preheat temperature shall not be less than 60°F (16°C) and the interpass temperature shall not exceed 325°F (163°C).
6. The test assembly may be quenched in water (temperature unimportant) between passes to control interpass temperature.
7. The minimum completed pad size shall be that shown above. The sample to be tested in Section 9 shall be taken from weld metal that is at least 3/8 in. (9.5 mm) above the original base-metal surface.

FIG. 1 PAD FOR CHEMICAL ANALYSIS OF UNDILUTED WELD METAL

each end, the test assembly shall be welded in the flat position with one bead on each side.

Welding shall begin with the assembly at room temperature (60°F [16°C] minimum). When the weld bead has been completed on the face side, the assembly shall be turned over and the bead deposited on the root side, as shown in Fig. 2B. This sequence shall not be interrupted. The electrode size shall be $^{3}/_{32}$ in. (2.4 mm) diameter or the size the manufacturer produces that is closest to $^{3}/_{32}$ in. (2.4 mm) diameter. The welding conditions shall be those listed in Table 2 for the classification being tested. After welding has been completed and the assembly has cooled, the assembly shall be prepared and tested as specified in 11.2 and Section 12, Bend Test, in the as-welded condition (except for the aging of the bend test specimen specified in 12.2).

8.5 Fillet Weld. A test assembly shall be prepared and welded as required in Table 3 and as specified in Fig. 3, using base metal of the appropriate type specified in Table 4 for each EX0T-X classification that requires a test assembly welded in the horizontal position. Each EX1T-X classification requires two test assemblies, one welded in the vertical position and one welded in the overhead position. The progression for vertical welding may be either upward or downward depending on the classification (see Table 2).

Before assembly, the standing member (web) shall have one edge prepared throughout its length and the base member (flange) side shall be straight, smooth, and clean. The test plates shall be assembled as shown in Fig. 3. When assembled, the faying surfaces shall be in intimate contact along the entire length of the joint. The test assembly shall be secured with tack welds deposited at each end of the weld joint. The welding procedure and the size of the electrode to be tested shall be as selected by the manufacturer. The

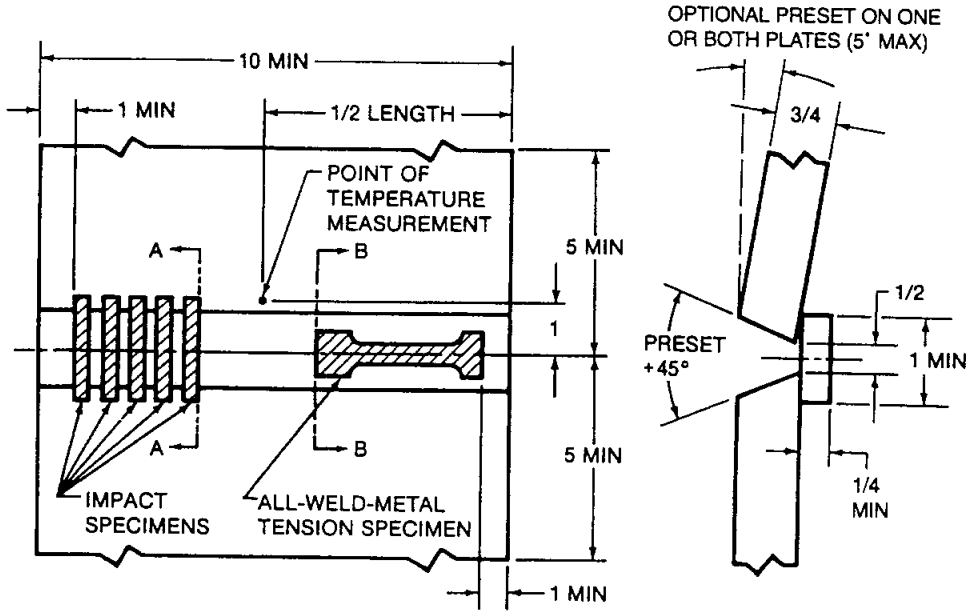

(A) TEST PLATE SHOWING LOCATION OF TEST SPECIMENS

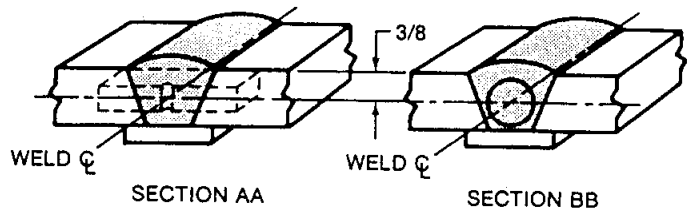

(B) ORIENTATION OF IMPACT SPECIMEN

(C) LOCATION OF ALL-WELD-METAL TENSION SPECIMEN

SI Equivalents	
in.	mm
1/4	6.4
3/8	9.5
1/2	13
3/4	19
1	25
5	125
10	250

Notes:
1. All dimensions except angles are in inches.
2. Test plate thickness shall be 1/2 in. (13 mm) and maximum root opening shall be 1/4 in. (6.4 mm) for 0.045 in. (1.1 mm) and smaller EXXT-11 electrode classifications.

FIG. 2A TEST ASSEMBLY FOR MECHANICAL PROPERTIES AND SOUNDNESS OF WELD METAL FROM MULTIPLE-PASS ELECTRODES

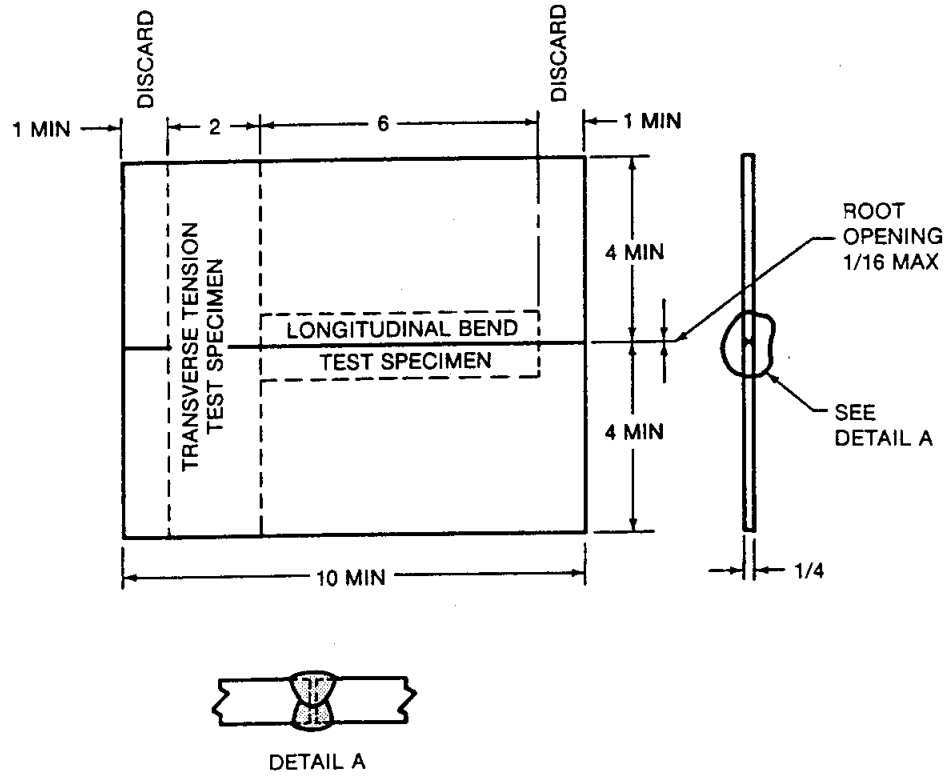

SI Equivalents	
in.	mm
1/16	1.6
1/4	6.4
1	25
2	50
4	100
6	150
10	250

Notes:
1. All dimensions are in inches.
2. Detail A shows the completed joint and approximate weld configuration.
3. Plate thickness may be reduced to 3/16 in. (4.8 mm) for electrode of 0.068 in. (1.7 mm) diameter or smaller.

FIG. 2B TEST ASSEMBLY FOR TRANSVERSE TENSION AND LONGITUDINAL GUIDED BEND TESTS FOR WELDS MADE WITH SINGLE-PASS ELECTRODES

fillet weld shall be a single-pass weld deposited in either the semiautomatic or mechanized mode as selected by the manufacturer. The fillet weld size shall not be greater than $^{3}/_{8}$ in. (9.5 mm). The fillet weld shall be deposited only on one side of the joint as shown in Fig. 3. Weld cleaning shall be limited to chipping, brushing, and needle scaling. Grinding, filing, or other metal cutting of the fillet weld face is prohibited. The testing of the assembly shall be as specified in Section 14, Fillet Weld Test.

9. Chemical Analysis

9.1 A sample for chemical analysis of the weld metal shall be obtained for those electrodes for which chemical analysis is a requirement in Table 3. The samples may be taken from the weld pad prepared in accordance with 8.3, from the reduced section of the fractured tension test specimen or from a corresponding location (or any location above it) in the weld metal in the groove weld in Fig. 2A. In case of dispute, the weld pad is the referee method.

9.2 The top surface of the pad described in 8.3, and shown in Fig. 1, shall be removed and discarded, and a sample for analysis obtained from the underlying metal no closer than $^{3}/_{8}$ in. (9.5 mm) to the surface of the base metal in Fig. 1 by any appropriate mechanical means. The sample shall be free of slag. When the sample is taken from the groove weld or the reduced section of the fractured tension test specimen, that material shall be prepared for analysis by any suitable mechanical means.

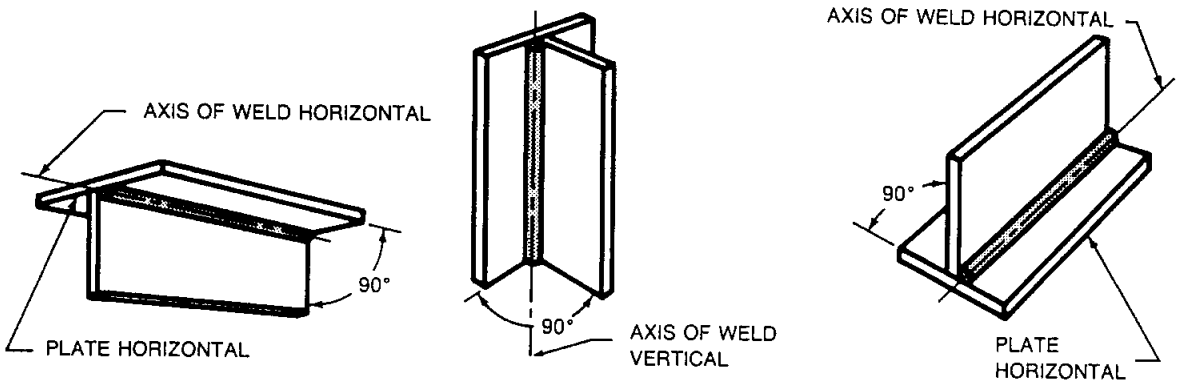

(A) OVERHEAD FILLET WELDS (B) VERTICAL FILLET WELDS (C) HORIZONTAL FILLET WELDS

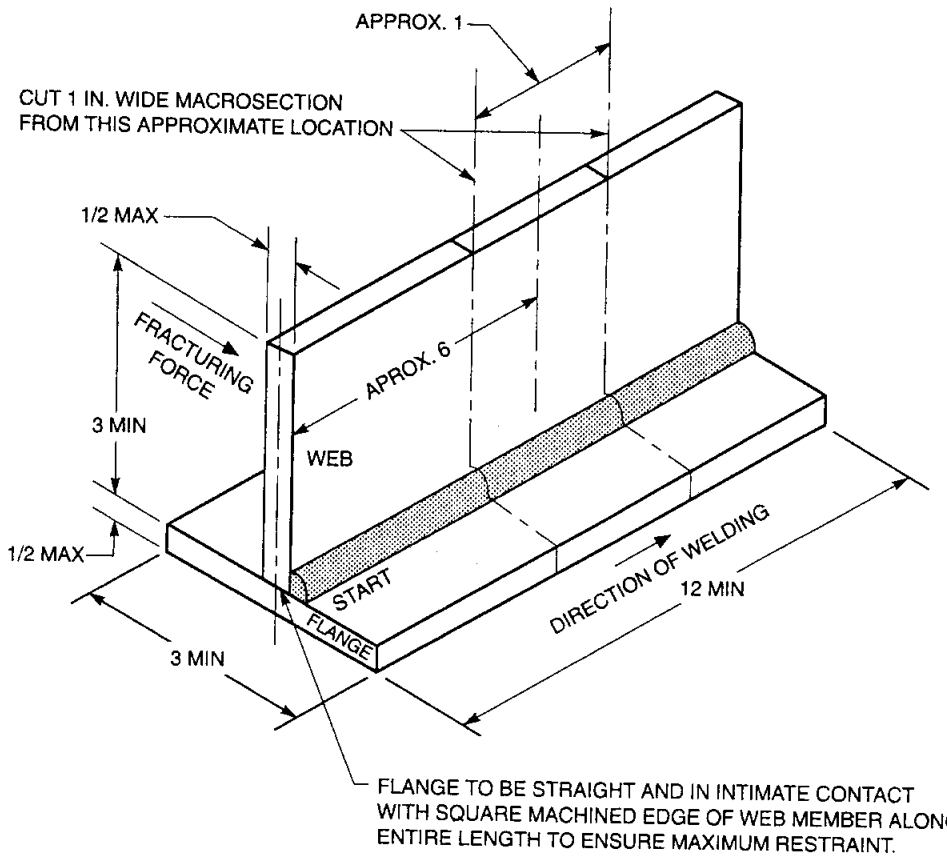

SI Equivalents	
in.	mm
1/2	13
1	25
3	75
6	150
12	300

Notes:
1. All dimensions are in inches.
2. If the web and flange thicknesses are less than or equal to 1/4 in. (6.4 mm), the web and flange widths shall be 2 in. (51 mm) minimum.
3. The test plate thickness shall be 3/16 in. (4.8 mm) for E70T-3 electrode classification.

FIG. 3 FILLET WELD TEST ASSEMBLY

TABLE 4
BASE METAL FOR TEST ASSEMBLIES

AWS Classification	ASTM Specification	UNS Number*
All except E7XT-2, E7XT-2M, E7XT-3, E7XT-10, E7XT-13, E7XT-14, and E7XT-GS	A36,	K02600
	A285 Grade C,	K02801
	A515 Grade 70,	K03101
	A516 Grade 70,	K02700
	A830 Grade 1015,	G10150
	A830 Grade 1018, or	G10180
	A830 Grade 1020	G10200
E7XT-2, E7XT-2M, E7XT-3, E7XT-10, E7XT-13, E7XT-14 and E7XT-GS	A515 Grade 70 or	K03101
	A516 Grade 70	K02700

NOTE:
*SAE/ASTM Unified Numbering System for Metals and Alloys.

TABLE 5
REQUIREMENTS FOR PASS AND LAYER CONTROL FOR MULTIPLE-PASS ELECTRODE CLASSIFICATION[a]

AWS Classification	Electrode Size		Required Total Passes	Suggested Passes per Layer		Suggested Number of Layers
	in.	mm		Layer 1	Layer 2 — Top	
E7XT-1, -1M E7XT-5, -5M E7XT-9, -9M E7XT-12, -12M	0.030	0.8	12–19	1 or 2	2 or 3[b]	6–9
	0.035	0.9				
	0.045	1.1				
	0.052	1.3	10–17	1 or 2	2 or 3[b]	5–8
	1/16	1.6				
	5/64	2.0				
	3/32	2.4	7–14	1 or 2	2 or 3[b]	4–7
	7/64	2.8				
	1/8	3.2				
E7XT-4 E7XT-6 E7XT-7	3/32[c]	2.4	7–11	1	2	4–6
E7XT-8	3/32[c]	2.4	12–17	1	2 or 3	6–9
E7XT-11	3/32[c]	2.4	7–11	1	2	4–6
	≤0.045	≤1.1	18–27	2	3	6–9
E6XT-G E7XT-G	Not Specified, To Be Recorded					

NOTES:
a. Actual number of passes, electrode diameter, wire feed speed or amperes, arc voltage, travel speed, and electrode extension (electrical stickout) shall be recorded and made available to the user on request. See A6.2 in the Annex.
b. The final layer may be 4 passes.
c. The electrode size shall be 3/32 in. (2.4 mm) or the size that the manufacturer produces that is closest to 3/32 in. (2.4 mm).

TABLE 6
CHEMICAL COMPOSITION REQUIREMENTS FOR WELD METAL

AWS Classification	UNS Number[c]	Weight Percent[a,b]										
		Carbon	Manganese	Silicon	Sulfur	Phosphorus	Chromium[d]	Nickel[d]	Molybdenum[d]	Vanadium[d]	Aluminum[d,e]	Copper[d]
E7XT-1 E7XT-1M	W07601											
E7XT-5 E7XT-5M	W07605	0.18	1.75	0.90	0.03	0.03	0.20	0.50	0.30	0.08	—	0.35
E7XT-9 E7XT-9M	W07609											
E7XT-4	W07604											
E7XT-6	W07606											
E7XT-7	W07607	(f)	1.75	0.60	0.03	0.03	0.20	0.50	0.30	0.08	1.8	0.35
E7XT-8	W07608											
E7XT-11	W07611											
EXXT-G[g]	—	(f)	1.75	0.90	0.03	0.03	0.20	0.50	0.30	0.08	1.8	0.35
E7XT-12 E7XT-12M	W07612	0.15	1.60	0.90	0.03	0.03	0.20	0.50	0.30	0.08	—	0.35
E6XT-13	W06613											
E7XT-2 E7XT-2M	W07602											
E7XT-3	W07603											
E7XT-10	W07610	Not Specified[h]										
E7XT-13	W07613											
E7XT-14	W07614											
EXXT-GS	—											

NOTES:
a. The weld metal shall be analyzed for the specific elements for which values are shown in this table.
b. Single values are maximums.
c. SAE/ASTM Unified Numbering System for Metals and Alloys.
d. The analysis of these elements shall be reported only if intentionally added.
e. Applicable to self-shielded electrodes. Electrodes intended for use with gas shielding need not have significant additions of aluminum.
f. The limit of this element is not specified, but the amount shall be determined and reported (see A6.5 in the Annex).
g. The total of all elements listed in this table shall not exceed 5 percent.
h. The composition of weld metal is not meaningful since electrodes of these classifications are intended only for single pass welds. Dilution from the base metal in such welds usually is quite high (see A7.2 in the Annex).

9.3 The sample shall be analyzed by accepted analytical methods. The referee method shall be ASTM E350, *Chemical Analysis of Carbon Steel, Low-Alloy Steel, Silicon Electrical Steel, Ingot Iron, and Wrought Iron.*

9.4 The results of the analysis shall meet the requirements of Table 6 for the classification of electrode under test.

10. Radiographic Test

10.1 The groove weld described in 8.4.1 and shown in Fig. 2A shall be radiographed to evaluate the soundness of the weld metal. In preparation for radiography, the backing shall be removed and both surfaces of the weld shall be machined or ground smooth and flush with the original surfaces of the base metal. Both surfaces of the test assembly, in the area of the weld, shall be smooth enough to avoid difficulty in interpreting the radiograph.

10.2 The weld shall be radiographed in accordance with ASTM E142, *Controlling Quality of Radiographic Testing.* The quality level of inspection shall be 2-2T.

10.3 The soundness of the weld metal meets the requirements of this specification if the radiograph shows no cracks, no incomplete fusion, and no rounded indications in excess of the largest size or numbers permitted by the radiographic standards in Fig. 4. One in. (25 mm) of the weld measured from each end of the assembly shall be excluded from the radiographic evaluation.

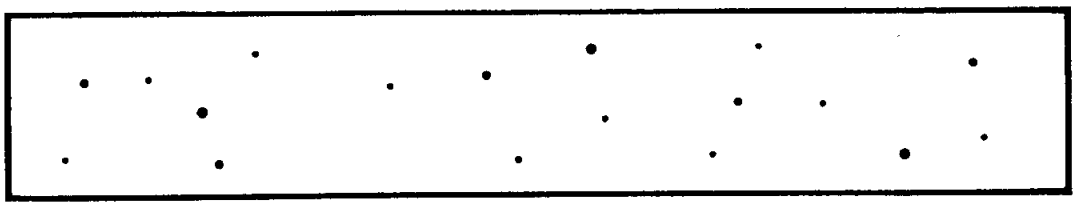

(A) ASSORTED ROUNDED INDICATIONS

SIZE 1/64 in. (0.4 mm) TO 1/16 in. (1.6 mm) IN DIAMETER OR IN LENGTH.
MAXIMUM NUMBER OF INDICATIONS IN ANY 6 in. (150 mm) OF WELD = 18, WITH THE FOLLOWING RESTRICTIONS:

MAXIMUM NUMBER OF LARGE 3/64 in. (1.2 mm) TO 1/16 in. (1.6 mm) IN DIAMETER OR IN LENGTH INDICATIONS = 3.
MAXIMUM NUMBER OF MEDIUM 1/32 in. (0.8 mm) TO 3/64 in. (1.2 mm) IN DIAMETER OR IN LENGTH INDICATIONS = 5.
MAXIMUM NUMBER OF SMALL 1/64 in. (0.4 mm) TO 1/32 in. (0.8 mm) IN DIAMETER OR IN LENGTH INDICATIONS = 10.

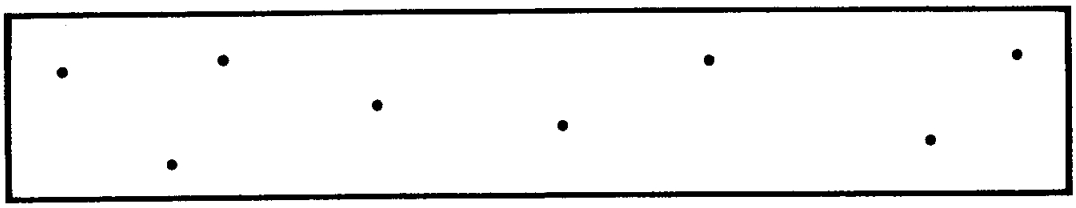

(B) LARGE ROUNDED INDICATIONS

SIZE 3/64 in. (1.2 mm) TO 1/16 in. (1.6 mm) IN DIAMETER OR IN LENGTH.
MAXIMUM NUMBER OF INDICATIONS IN ANY 6 in. (150 mm) OF WELD = 8.

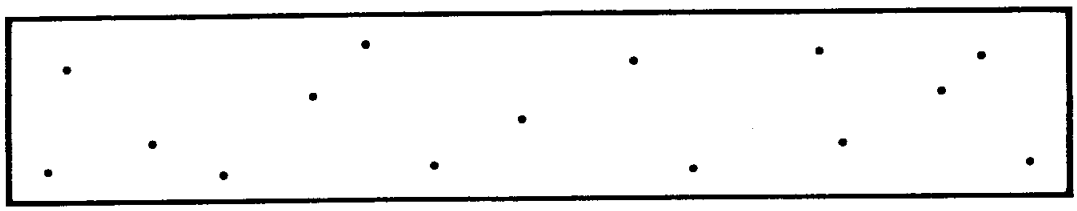

(C) MEDIUM ROUNDED INDICATIONS

SIZE 1/32 in. (0.8 mm) TO 3/64 in. (1.2 mm) IN DIAMETER OR IN LENGTH.
MAXIMUM NUMBER OF INDICATIONS IN ANY 6 in. (150 mm) OF WELD = 15.

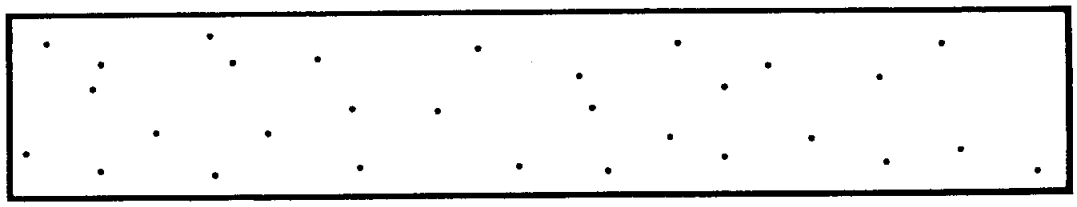

(D) SMALL ROUNDED INDICATIONS

SIZE 1/64 in. (0.4 mm) TO 1/32 in. (0.8 mm) IN DIAMETER OR IN LENGTH.
MAXIMUM NUMBER OF INDICATIONS IN ANY 6 in. (150 mm) OF WELD = 30.

Notes:
1. In using these standards, the chart which is most representative of the size of the rounded indications present in the test specimen radiograph shall be used for determining conformance to these radiographic standards.
2. Since these are test welds specifically made in the laboratory for classification purposes, the radiographic requirements for these test welds are more rigid than those which may be required for general fabrication.
3. Indications where the largest dimension does not exceed 1/64 in. (0.4 mm) diameter or length shall be disregarded.

FIG. 4 RADIOGRAPHIC STANDARDS FOR TEST ASSEMBLY IN FIGURE 2A

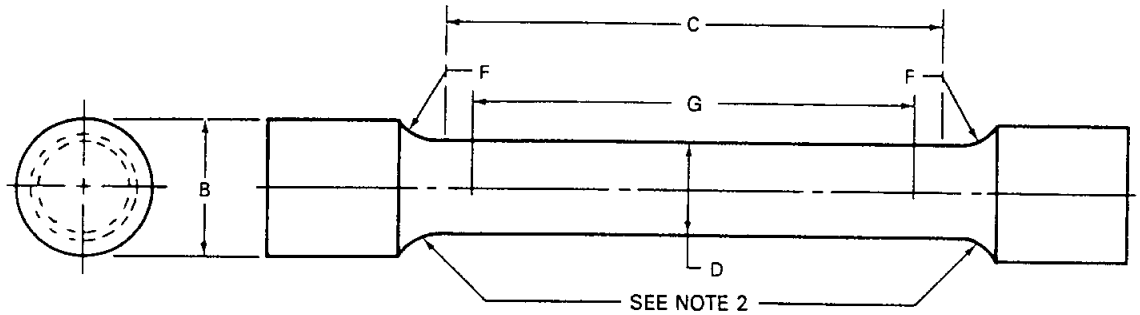

G = GAUGE LENGTH

Dimensions of Specimen													
Test Plate Thickness		D		G		C		B		F, min.		Approximate Area	
in.	mm	in.	mm	in.	mm	in.	mm	in.	mm	in.	mm	sq. in.	sq. mm
3/4	19.1	0.500 ±0.010	12.70 ±0.25	2.000 ±0.005	50.80 ±0.13	2-1/4	57.1	3/4	19.1	0.375	9.5	1/5	130
1/2	12.7	0.250 ±0.005	6.40 ±0.13	1.000 ±0.005	25.40 ±0.13	1-1/4	31.8	1/2	12.70	0.187	4.8	1/20	32

Notes:
1. Dimensions G and C shall be as shown, but the ends of the specimen may be of any shape required to fit the testing machine as long as the load is kept axial.
2. The diameter of the specimen, within the gauge length, shall be slightly smaller at the center than at the ends. The difference shall not exceed one percent of the diameter.
3. When the extensometer is required to determine yield strength or other elastic properties, dimension C may be modified. However, the percent of the elongation shall be based on dimension G.
4. The surface finish within the C dimension shall be no rougher than 63 μin. (1.6 μm).
5. The 0.250 in. (6.4 mm) specimen size shall be used for 0.045 in. (1.1 mm) and smaller EXXT-11 electrodes.

FIG. 5 ALL-WELD-METAL TENSION TEST SPECIMEN

A rounded indication is an indication (on the radiograph) whose length is no more the 3 times its width. Rounded indications may be circular, elliptical, conical, or irregular in shape, and they may have tails. The size of a rounded indication is the largest dimension of the indication, including any tail that may be present. The indication may be of porosity or slag. Indications whose largest dimension does not exceed $^1/_{64}$ in. (0.4 mm) shall be disregarded. Test assemblies with indications larger than the largest indications permitted in the radiographic standards (Fig. 4) do not meet the requirements of this specification.

11. Tension Test

11.1 One all-weld-metal tension test specimen shall be machined from the groove weld described in 8.4.1 and shown in Fig. 2A, as required in Table 3. The dimensions of the specimen shall be as shown in Fig. 5.

11.1.1 After machining, but before testing, the specimen may be aged at 200 to 220°F (93 to 104°C) for up to 48 hours, then allowed to cool to room temperature. Refer to A8.3 for a discussion on the purpose of aging.

11.1.2 After cooling, the specimen shall be tested in the manner described in the tension test section of ANSI/AWS B4.0, *Standard Methods for Mechanical Testing of Welds.*

11.1.3 The results of the all-weld-metal tension test shall meet the requirements specified in Table 1.

11.2 One transverse tension test specimen shall be machined from the groove weld described in 8.4.2 and shown in Fig. 2B, as required in Table 3. The dimensions of the specimen shall be as shown in Fig. 6.

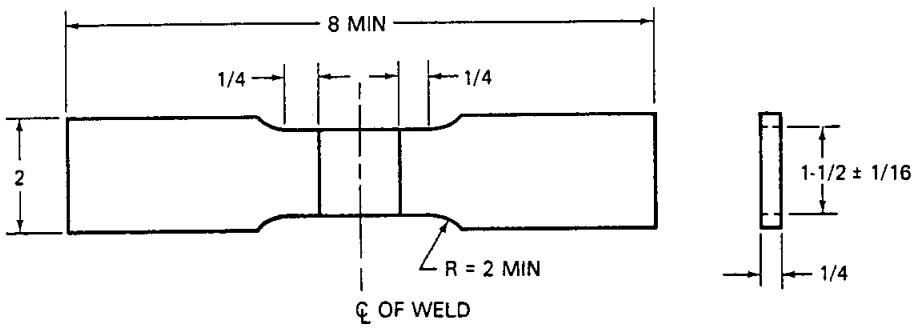

SI Equivalents	
in.	mm
1/16	1.6
1/4	6.4
1-1/2	38
2	50
8	200

Notes:
1. All dimensions are in inches.
2. Weld reinforcement shall be ground or machined flush with the surfaces of the specimen. Grinding or machining marks shall be parallel to the length of the longest dimension of the specimen.
3. Thickness shall be 3/16 in. (4.8 mm) if 3/16 in. (4.8 mm) plate is used for the preparation of the test assembly shown in Figure 2B.

FIG. 6 TRANSVERSE TENSION TEST SPECIMEN

11.2.1 The specimen shall be tested in the as-welded condition in the manner described in the tension test section of ANSI/AWS B4.0.

11.2.2 The results of the transverse tension test shall meet the requirements specified in Table 1. A test specimen that fractures in the base metal shall be considered to have met those requirements.

12. Bend Test

12.1 One longitudinal bend test specimen shall be machined from the groove weld test assembly described in 8.4.2 and shown in Fig. 2B, as required in Table 3. The dimensions of the specimen shall be as shown in Fig. 7.

12.2 After machining, but before bending, the specimen may be aged at 200 to 220°F (93 to 104°C) for up to 48 hours, then allowed to cool to room temperature. Refer to A8.3 for a discussion on the purpose of aging.

12.3 The specimens shall be tested in the manner described in the bend test section of ANSI/AWS B4.0 on any of the standard bend test jigs shown therein. The bend radius shall be $^3/_4$ in. (19 mm). Positioning of the bend specimen shall be such that the weld face of the last side welded is in tension.

12.4 The specimen, after bending, shall conform to the $^3/_4$ in. (19 mm) radius, with an appropriate allowance for springback, and the weld metal shall not show any crack or other open defect exceeding $^1/_8$ in. (3.2 mm) in any direction. Cracks in the base-metal shall be disregarded, as long as they do not enter the weld metal. When base metal openings or cracks enter the weld metal, the test shall be considered invalid. Specimens in which this occurs shall be replaced, specimen for specimen, and the test completed. In this case, the doubling of specimens required for retest in Section 7, Retest, does not apply.

13. Impact Test

13.1 Five Charpy V-notch impact test specimens (Fig. 8) shall be machined from the test assembly shown in Fig. 2A, for those classifications for which impact testing is required in Table 3.

13.2 The five specimens shall be tested in accordance with the impact test section of ANSI/AWS B4.0. The test temperature shall be that specified in Table 1, for the classification under test. For those electrodes to be identified by the optional supplemental impact designator "J," the test temperature shall be as specified in Note d to Table 1.

13.3 In evaluating the test results, the lowest and the highest values obtained shall be disregarded. Two of the remaining three values shall equal or exceed the specified 20 ft·lbf (27 J) energy level. One of the three may be lower, but not lower than 15 ft·lbf

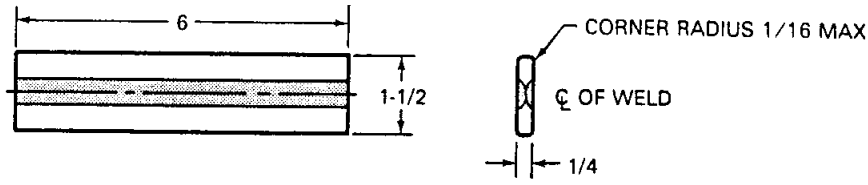

SI Equivalents	
in.	mm
1/16	1.6
1/4	6.4
1-1/2	38
6	150

Notes:
1. All dimensions are in inches.
2. Thickness shall be 3/16 in. (4.8 mm) if 3/16 in. (4.8 mm) plate is used for the preparation of the test assembly shown in Figure 2B.

FIG. 7 LONGITUDINAL GUIDED BEND SPECIMEN FOR WELDS MADE WITH SINGLE-PASS ELECTRODES

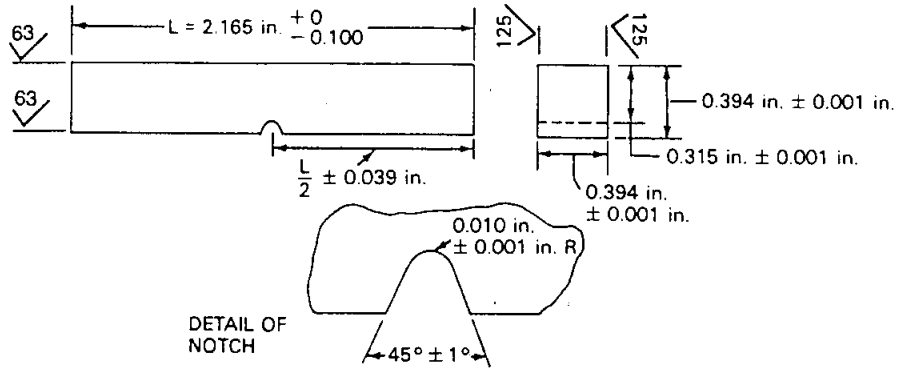

SI Equivalents	
in.	mm
0.001	0.025
0.010	0.255
0.039	1.0
0.100	2.5
0.315	8.0
0.394	10.0
1.082	27.5
2.165	55.0

Notes:
1. All dimensions except angles are in inches.
2. The notched surface and the surface to be struck shall be parallel within 0.002 in. (0.05 mm) and have at least a 63 μin. (1.6 μm) finish. The other two surfaces shall be square with the notched or struck surface within ± 10 minutes of the degree and have at least a 125 μin. (3.2 μm) finish.
3. The notch shall be smoothly cut by mechanical means and shall be square with the longitudinal edge of the specimen within one degree.
4. The geometry of the notch shall be measured on at least one specimen in a set of five specimens. Measurement shall be done at minimum 50 times magnification on either a shadowgraph or a metallograph.
5. The correct location of the notch shall be verified by etching before or after machining.
6. If a specimen does not break upon being struck, the value for energy absorbed shall be reported as the capacity of the impact testing machine followed by a plus sign (+).

FIG. 8 DETAILS OF CHARPY V-NOTCH IMPACT TEST SPECIMEN

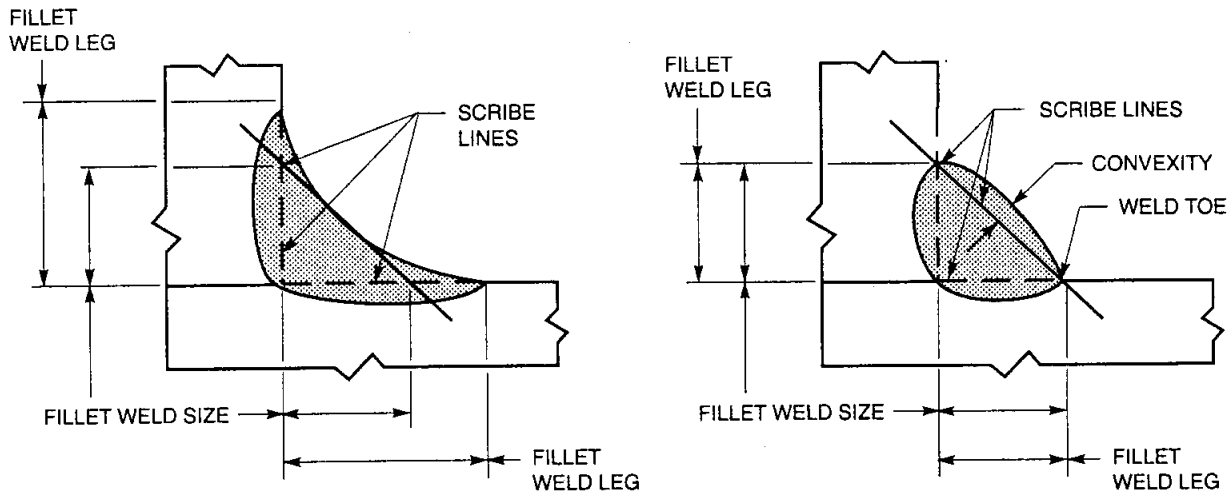

Notes:
1. Fillet weld size is the leg lengths of the largest isosceles right triangle which can be inscribed within the fillet weld cross section.
2. Convexity is the maximum distance from the face of a convex fillet weld perpendicular to a line joining the weld toes.
3. Fillet weld leg is the distance from the joint root to the toe of the fillet weld.

FIG. 9 DIMENSIONS OF FILLET WELDS

(20 J), and the average of the three shall be not less than the required 20 ft·lbf (27 J) energy level.

14. Fillet Weld Test

14.1 The required fillet welds shall be made in accordance with 8.5 and Fig. 3, and shall be examined visually over the entire face of each weld. There shall be no indication of cracks, and the weld shall be reasonably free of undercut, overlap, trapped slag, and surface porosity. After the visual examination, a specimen containing approximately 1 in. (25 mm) of the length of the weld shall be removed as shown in Fig. 3. One cross-sectional surface of the specimen shall be polished and etched, and then examined as required in 14.2.

14.2 Scribe lines shall be placed on the prepared surface, as shown in Fig. 9, and the fillet weld size, fillet weld leg, and convexity of the weld shall be determined to the nearest $\frac{1}{64}$ in. (0.4 mm) by actual measurement. These measurements shall meet the requirements specified in 8.5 and Table 7.

14.3 The remaining two sections of the test assembly shall be broken longitudinally through the fillet weld by a force exerted as shown in Fig. 3. When necessary, to facilitate fracture through the fillet, one or more of the following procedures may be used:

(1) A reinforcing bead, as shown in Fig. 10(A), may be added to each leg of the weld.

(2) The position of the web on the flange may be changed, as shown in Fig. 10(B).

(3) The face of the fillet may be notched, as shown in Fig. 10(C).

Tests in which the weld metal pulls out of the base metal during bending are invalid tests. Specimens in which this occurs shall be replaced, specimen for specimen, and the test completed. In this case, the doubling of specimens required for retest in Section 7, Retest, does not apply.

14.4 The fractured surfaces shall be examined visually. They shall be free of cracks and shall be reasonably free of porosity and trapped slag. Incomplete fusion at the root of the weld shall not exceed 20 percent of the total length of the weld. Slag beyond the vertex of the isosceles triangle with the hypotenuse as the base, as shown in Fig. 9, shall not be considered incomplete fusion.

TABLE 7
DIMENSIONAL REQUIREMENTS FOR FILLET WELD USABILITY TEST SPECIMENS

Measured Fillet Weld Size		Maximum Convexity*		Maximum Difference Between Fillet Weld Legs	
in.	mm	in.	mm	in.	mm
1/8 or less	3.2	5/64	2.0	1/32	0.8
9/64	3.6	5/64	2.0	3/64	1.2
5/32	4.0	5/64	2.0	3/64	1.2
11/64	4.4	5/64	2.0	1/16	1.6
3/16	4.8	5/64	2.0	1/16	1.6
13/64	5.2	5/64	2.0	5/64	2.0
7/32	5.6	5/64	2.0	5/64	2.0
15/64	6.0	5/64	2.0	3/32	2.4
1/4	6.4	5/64	2.0	3/32	2.4
17/64	6.7	3/32	2.4	7/64	2.8
9/32	7.1	3/32	2.4	7/64	2.8
19/64	7.5	3/32	2.4	1/8	3.2
5/16	8.0	3/32	2.4	1/8	3.2
21/64	8.3	3/32	2.4	9/64	3.6
11/32	8.7	3/32	2.4	9/64	3.6
23/64	9.1	3/32	2.4	5/32	4.0
3/8 or more	9.5	3/32	2.4	5/32	4.0

NOTE:
*Maximum convexity for fillet welds made using EXXT-5 and EXXT-5M electrodes may be 1/32 in. (0.8 mm) larger than listed requirements.

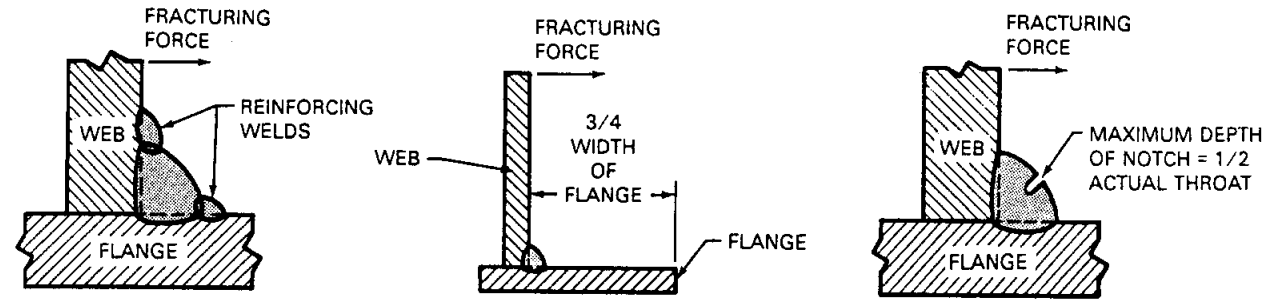

(A) REINFORCING WELDS (B) OFFSET OF WEB (C) NOTCHING

FIG. 10 ALTERNATE METHODS FOR FACILITATING FILLET WELD FRACTURE

TABLE 8
OPTIONAL AVERAGE DIFFUSIBLE HYDROGEN LIMITS[a]

AWS Classification	Hydrogen Category Designator[b,c,d]	Diffusible Hydrogen Limit[e] ml/100 g Deposited Metal
All Classifications	H16	16.0 max
	H8	8.0 max
	H4	4.0 max

NOTES:
a. Limits on the diffusible hydrogen when tested in accordance with ANSI/AWS A4.3, *Standard Methods for Determination of the Diffusible Hydrogen Content of Martensitic, Bainitic, and Ferritic Steel Weld Metal Produced by Arc Welding.*
b. See Annex Figure A1 for proper placement of the hydrogen designator. These hydrogen designators are optional designators only and do not constitute part of the AWS classification. For example, the AWS classification for an electrode designated E70T-XH8 is E70T-X. Similarly, the classification for an electrode designated E71T-XMH4 is E71T-XM.
c. The lower diffusible hydrogen levels (H8 and H4) may not be available in some classifications (see A8.2.9)
d. Electrodes which satisfy the diffusible hydrogen limits for the H4 category also satisfy the limits for the H8 and H16 categories. Electrodes which satisfy the diffusible hydrogen limits for the H8 category also satisfy the limits for the H16 category.
e. These hydrogen limits are based on welding in air containing a maximum of 10 grains of water per pound (1.43 g/kg) of dry air. Testing at any higher atmospheric moisture level is acceptable, provided these limits are satisfied (see 15.3).

15. Diffusible Hydrogen Test

15.1 The smallest and largest size of an electrode to be identified by an optional supplemental diffusible hydrogen designator shall be tested according to one of the methods given in ANSI/AWS A4.3, *Standard Methods for Determination of the Diffusible Hydrogen Content of Martensitic, Bainitic, and Ferritic Steel Weld Metal Produced by Arc Welding.* Based upon the average value of test results which satisfy the requirements of Table 8, the appropriate diffusible hydrogen designator may be added at the end of the classification. If the actual test results for an electrode meet the requirements for the lower or lowest hydrogen designator, as specified in Table 8, the electrode also meets the requirements for all higher hydrogen designators without the need to retest.

15.2 Testing shall be done with electrodes in the "as-received" condition. Conditioning of the electrode prior to testing is not permitted.[3]

The use of electrical stickouts in excess of those which would be used in the routine application of the electrode is not permitted.

15.3 For purposes of certifying compliance with diffusible hydrogen requirements, the reference atmospheric condition shall be an absolute humidity of 10 grains of moisture per pound (1.43 g per kg) of dry air at the time of welding.[4] The actual atmospheric conditions shall be reported along with the average value for the tests according to ANSI/AWS A4.3.

15.4 When the absolute humidity equals or exceeds the reference condition at the time of preparation of the test assembly, the test shall be acceptable as demonstrating compliance with the requirements of this specification, provided the actual test results satisfy the diffusible hydrogen requirements for the applicable designator, as specified in Table 8.

PART C — MANUFACTURE, IDENTIFICATION, AND PACKAGING

16. Method of Manufacture

The electrodes classified according to this specification may be manufactured by any method that will produce electrodes that meet the requirements of this specification.

17. Standard Sizes

Standard sizes for filler metal in the different package forms such as coils with support, coils without support, drums, and spools are as shown in Table 9 (see Section 19, Standard Package Forms).

18. Finish and Uniformity

18.1 All electrodes shall have a smooth finish that is free from slivers, depressions, scratches, scale, seams, laps (exclusive of the longitudinal joint), and foreign

[3] Conditioning can be considered to be any special preparation or procedure, such as baking the electrode, which the user would not normally practice.

[4] See A8.2.5 in the Annex.

TABLE 9
STANDARD SIZES AND TOLERANCES OF ELECTRODES*

AWS Classification	Electrode Size (Diameter)		Diameter Tolerance	
	in.	mm	in.	mm
All Classifications	0.030	0.8	±0.002	±0.05
	0.035	0.9		
	0.045	1.1		
	0.052	1.3		
	1/16 (0.062)	1.6		
All Classifications	0.068	1.7	±0.003	±0.08
	0.072	1.8		
	5/64 (0.078)	2.0		
	3/32 (0.094)	2.4		
	7/64 (0.109)	2.8		
	0.120	3.0		
	1/8 (0.125)	3.2		
	5/32 (0.156)	4.0		

NOTE:
*Electrodes produced in sizes other than those shown may be classified by using similar tolerances as shown.

matter that would adversely affect the welding characteristics, the operation of the welding equipment, or the properties of the weld metal.

18.2 Each continuous length of electrode shall be from a single lot of material as defined in ANSI/AWS A5.01, and welds, when present, shall have been made so as not to interfere with the uniform, uninterrupted feeding of the electrode on automatic and semiautomatic equipment.

18.3 Core ingredients shall be distributed with sufficient uniformity throughout the length of the electrode so as not to adversely affect the performance of the electrode or the properties of the weld metal.

18.4 A suitable protective coating may be applied to any electrode in this specification.

19. Standard Package Forms

19.1 Standard package forms are coils with support, coils without support, spools, and drums. Standard package dimensions and weights for each form are given in Table 10 and Figs. 11, 12, and 13. Package forms, sizes, and weights other than these shall be as agreed by purchaser and supplier.

19.2 The liners in coils with support shall be designed and constructed to prevent distortion of the coil during normal handling and use and shall be clean and dry enough to maintain the cleanliness of the electrode.

19.3 Spools shall be designed and constructed to prevent distortion of the electrode during normal handling and use and shall be clean and dry enough to maintain the cleanliness of the electrode.

20. Winding Requirements

20.1 Electrodes on spools and in coils (including drums) shall be wound so that kinks, waves, sharp bends, overlapping, or wedging are not encountered, leaving the electrode free to unwind without restriction. The outside end of the electrode (the end with which welding is to begin) shall be identified so it can be readily located and shall be fastened to avoid unwinding.

20.2 The cast and helix of electrode in coils, spools, and drums shall be such that the electrode will feed in an uninterrupted manner in automatic and semiautomatic equipment.

21. Electrode Identification

21.1 The product information and the precautionary information required in Section 23, Marking of Packages, for marking each package shall also appear on each coil, spool, and drum.

21.2 Coils without support shall have a tag containing this information securely attached to the electrode at the inside end of the coil.

TABLE 10
PACKAGING REQUIREMENTS[a]

abType of Package		Package Size in.	Package Size mm	Net Weight of Electrode[b] lb	Net Weight of Electrode[b] kg
Coils without Support		(See Note c)		(See Note c)	
Coils with Support (see below)	ID	6-3/4	170	14	6.4
	ID	12	300	25, 30, 50, and 60	11, 14, 23, and 27
Spools	OD	4	100	1-1/2 and 2-1/2	0.7 and 1.1
	OD	8	200	10, 15, and 22	4.5, 6.8, and 10
	OD	12	300	25, 30, 35, and 44	11, 14, 16, and 20
	OD	14	360	50 and 60	23 and 27
	OD	22	560	250	110
	OD	24	610	300	140
	OD	30	760	600 and 750	170 and 340
Drums	OD	15-1/2	400	(See Note c)	
	OD	20	500	(See Note c)	
	OD	21	530	500	225
	OD	23	600	300 and 600	140 and 270

Coils with Support — Standard Dimensions and Weights[a]

Electrode Size	Coil Net Weight[b] lb	Coil Net Weight[b] kg	Coil Dimensions: Inside Diameter of Liner in.	Coil Dimensions: Inside Diameter of Liner mm	Coil Dimensions: Width of Wound Electrode, max. in.	Coil Dimensions: Width of Wound Electrode, max. mm
All	14	6.4	6-3/4 ± 1/8	170 ± 3	3	75
	25 and 30	11 and 14	12 ± 1/8	305 ± 3	2-1/2 or 4-5/8	65 or 120
	50 and 60	23 and 27	12 ± 1/8	305 ± 3	4-5/8	120

NOTES:
a. Sizes and net weights other than those specified may be supplied as agreed between supplier and purchaser.
b. Tolerance on net weight shall be ±10 percent.
c. As agreed between supplier and purchaser.

21.3 Coils with support shall have the information securely affixed in a prominent location on the support.

21.4 Spools shall have the information securely affixed in a prominent location on the outside of at least one flange of the spool.

21.5 Drums shall have the information securely affixed in a prominent location on the outside of the drum.

22. Packaging

Electrodes shall be suitably packaged to ensure against damage during shipment and storage under normal conditions.

23. Marking of Packages

23.1 The following product information (as a minimum) shall be legibly marked so as to be visible from the outside of each unit package.

(1) AWS specification and classification designation (year of issue may be excluded)

(2) Supplier's name and trade designation

(3) Size and net weight

(4) Lot, control, or heat number

23.2 The following precautionary information (as a minimum) shall be prominently displayed in legible print on all packages of flux cored electrodes, including individual unit packages enclosed within a larger package:

SI Equivalents	
in.	mm
0.005	0.13
1/32	0.8
0.630	16
1-3/4	44
4	100

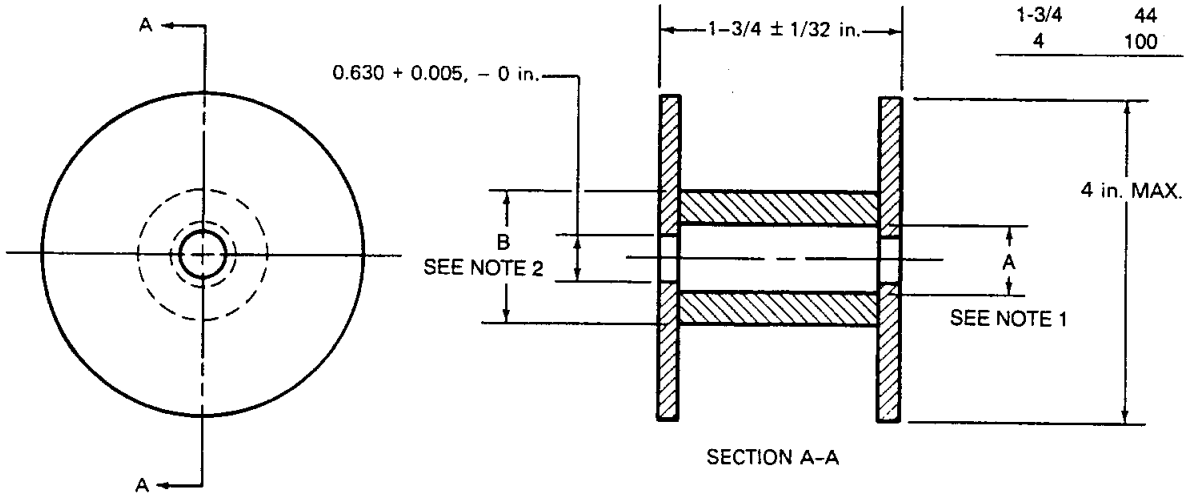

Notes:
1. Dimension A, inside diameter of barrel, shall be such that swelling of the barrel or misalignment of the barrel and flanges will not result in the core of the spool being less than the inside diameter of the flanges.
2. Dimension B, outside diameter of barrel, shall be such as to permit proper feeding of the electrode.

FIG. 11 DIMENSIONS OF STANDARD 4 in. (100 mm) SPOOL

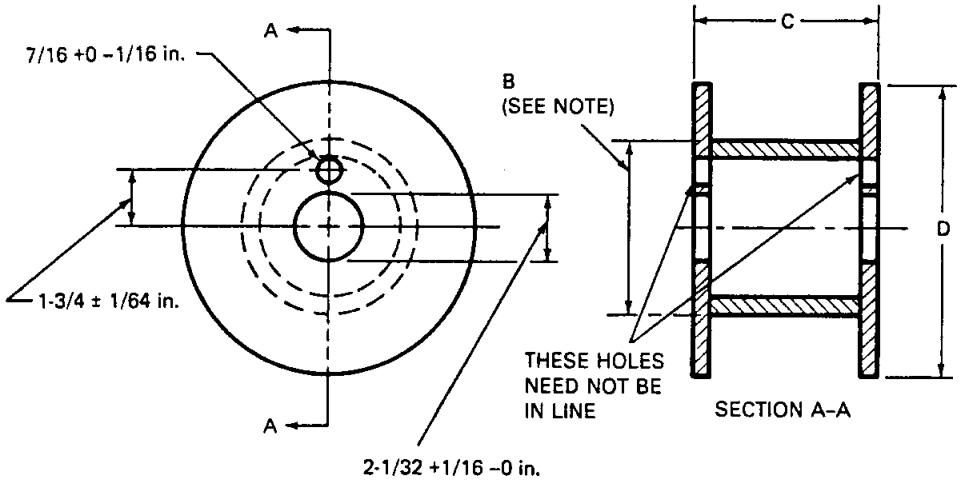

Spool Size		C Dimension		D Dimension (maximum)	
in.	mm	in.	mm	in.	mm
8	200	2-5/32 ± 1/32	55 ± 1	8	205
8	200	2-7/8 ± 1/16	75 ± 2	8	205
12	300	4 ± 1/16	100 ± 2	12	305
14	350	4 ± 1/16	100 ± 2	14	355

SI Equivalents	
in.	mm
1/64	0.4
1/16	1.6
7/16	11
1-3/4	44
2-1/32	52

Note:
Dimension B, outside diameter of barrel, shall be such as to permit proper feeding of the electrode.

FIG. 12 DIMENSIONS OF STANDARD 8, 12 AND 14 in. (200, 300 AND 350 mm) SPOOLS

WARNING:

Protect yourself and others.

Read and understand this information.

FUMES AND GASES can be dangerous to your health.

ARC RAYS can injure eyes and burn skin.

ELECTRIC SHOCK can kill.

- Before use, read and understand the manufacturer's instructions, the Material Safety Data Sheets (MSDSs), and your employer's safety practices.
- Keep your head out of the fumes.
- Use enough ventilation, exhaust at the arc, or both, to keep fumes and gases away from your breathing zone and the general area.
- Wear correct eye, ear, and body protection.
- Do not touch live electrical parts.
- See American National Standard Z49.1, *Safety in Welding, Cutting, and Allied Processes*, published by the American Welding Society, 550 N.W. LeJeune Road, Miami, Florida 33126; *OSHA Safety and Health Standards*, 29 CFR 1910, available from the U.S. Government Printing Office, Washington, D.C. 20402.

DO NOT REMOVE THIS INFORMATION

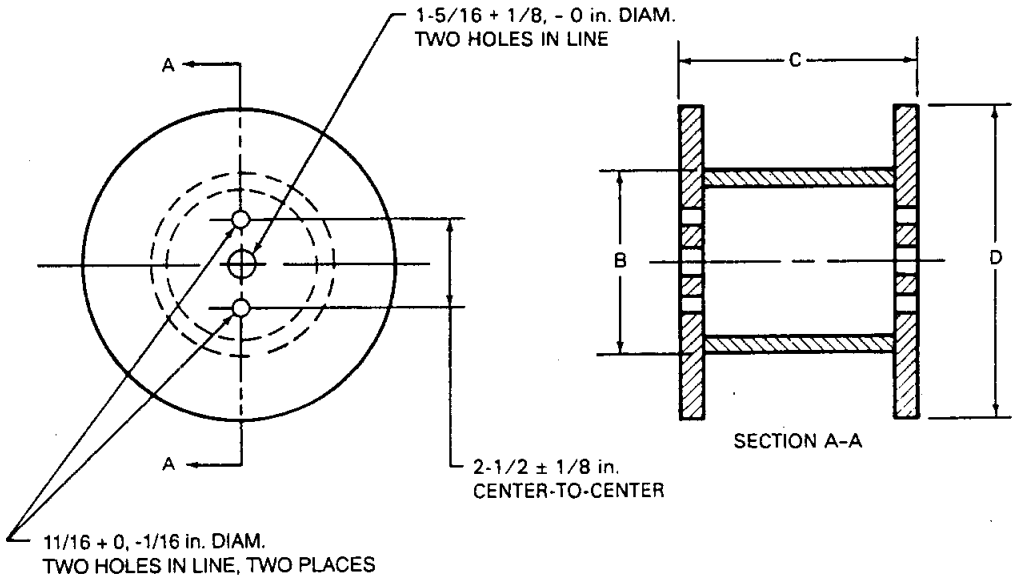

Spool Size		D Dimension		Maximum C Dimension	
in.	mm	in.	mm	in.	mm
22	560	22 ± 1/2	560 ± 12.7	12	305
24	610	24 ± 1/2	610 ± 12.7	13-1/2	345
30	760	30 ± 1/2	760 ± 12.7	13-1/2	345

SI Equivalents	
in.	mm
1/16	1.6
1/8	3
11/16	18
1-5/16	33
2-1/2	63

Note:
Dimension B, outside diameter of barrel, shall be such as to permit proper feeding of the electrode.

FIG. 13 DIMENSIONS OF 22, 24 AND 30 in. (560, 610, 760 mm) SPOOLS

Annex
Guide to Specification for Carbon Steel Electrodes for Flux Cored Arc Welding

(This Annex is not a part of ANSI/AWS A5.20-95, *Specification for Carbon Steel Electrodes for Flux Cored Arc Welding,* but is included for information purposes only.)

A1. Introduction

The purpose of this guide is to correlate the electrode classifications with their intended applications so the specification can be used effectively. This guide provides examples rather than complete listings of the materials and applications for which each electrode is suitable.

A2. Classification System

A2.1 The system for identifying the electrode classifications in this specification follows, for the most part, the standard pattern used in other AWS filler metal specifications. An illustration of this system is given in Fig. A1.

A2.2 Some of the classifications are intended to weld only in the flat and horizontal positions (E70T-5, for example). Others are intended for welding in all positions (E71T-1, for example). As in the case of shielded metal arc electrodes, the smaller sizes of flux cored electrodes are the ones used for the out-of-position work. Flux cored electrodes $^{5}/_{64}$ in. (2.0 mm) in diameter and larger usually are used for horizontal fillets and flat position welding.

A2.3 Many of the classifications included in this specification have requirements for impact testing in the as-welded condition as shown in Table 3. In order to include product with improved toughness at lower temperatures, an optional supplemental designator, J, has been added to identify classifications which, when tested, produce weld metal which exhibits 20 ft·lbf at −40°F (27 J at −40°C). The user is cautioned that although the improved weld metal toughness will be evidenced when welding is performed under conditions similar to the test assembly preparation method specified in this specification, other applications of the electrode, such as long-term postweld heat treatment or vertical up welding with higher heat input, may differ markedly from the improved toughness levels given. The users should always perform their own properties verification testing.

A2.4 "G" Classification

A2.4.1 This specification includes electrodes classified as E6XT-G, E6XG-GS, E7XT-G, and E7XT-GS. The "G" or "GS" indicates that the electrode is of a general classification. It is "general" because not all of the particular requirements specified for each of the other classifications are specified for this classification. The intent, in establishing this classification, is to provide a means by which electrodes that differ in one respect or another (chemical composition, for example) from all other classifications (meaning that the composition of the electrode — in the case of the example — does not meet the composition specified for any of the classifications in the specification) can still be classified according to the specification. The purpose is to allow a useful electrode — one that otherwise would have to await a revision of the specification — to be classified immediately, under the existing specification. This means, then, that two electrodes — each bearing the same "G" classification — may be quite different in some certain respect (chemical composition, again, for example).

A2.4.2 The point of difference (although not necessarily the amount of the difference) referred to in A2.4.1 will be readily apparent from the use of the words "not required" and "not specified" in the specification. The use of these words is as follows:

Not Specified is used in those areas of the specification that refer to the results of some particular test. It

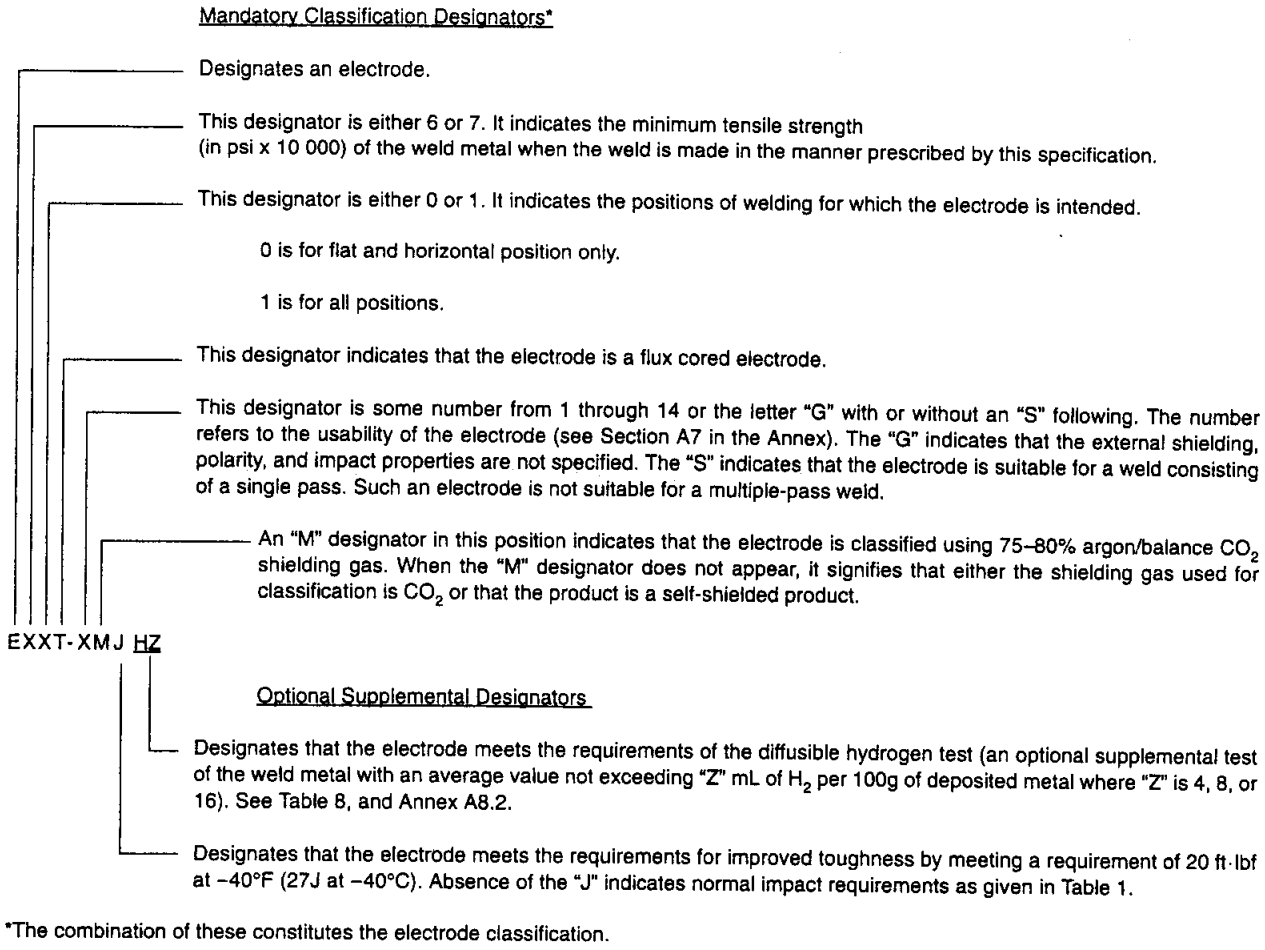

FIG. A1 CLASSIFICATION SYSTEM FOR CARBON STEEL FLUX CORED ELECTRODES

indicates that the requirements for that test are not specified for that particular classification.

Not Required is used in those areas of the specification that refer to the tests that must be conducted in order to classify an electrode (or a welding material). It indicates that that test is not required because the requirements (results) for the test have not been specified for that particular classification. Restating the case, when a requirement is not specified, it is not necessary to conduct the corresponding test in order to classify a electrode to that classification. When purchasers want the information provided by that test in order to consider a particular product of that classification for a certain application, they will have to arrange for that information with the supplier of the product. They will have to establish with that supplier just what the testing procedure and the acceptance requirements are to be for that test. They may want to incorporate that information (via ANSI/AWS A5.01, *Filler Metal Procurement Guidelines*) in the purchase order.

A2.4.3 When an electrode cannot be classified according to some classification other than a "G" classification, the manufacturer may request that a classification be established for that electrode. This may be done by following the procedure given below. When the manufacturer elects to use the "G" classification, the Filler Metal Committee recommends that they still request a classification be established for that electrode as long as the electrode is of commercial significance.

A2.4.4 Written requests for establishing a new electrode classification shall provide sufficient detail to permit the Committee or the Subcommittee to decide whether a new classification or the modification of an existing classification is more appropriate, and whether either is necessary to satisfy the need. The request

shall state the variables and their limits for such a classification or modification. The request should contain some indication of the time by which completion of the new classification or modification is needed.

A2.4.5 Requests shall be received at AWS Headquarters by the Secretary of the Committee, who will:

(1) Assign an identifying number to each request. This number shall include the date the request was received.

(2) Confirm receipt of the request and give the identification number to the person who made the request.

(3) Send a copy of the request to the Chairman of the Filler Metal Committee and to the Chairman of the particular subcommittee involved.

(4) File the original request.

(5) Add outstanding requests to the agenda of meetings of the Committee and the subcommittee.

A3. Acceptance

Acceptance of all welding materials classified under this specification is in accordance with ANSI/AWS A5.01, *Filler Metal Procurement Guidelines,* as the specification states. Any testing a purchaser requires of the supplier, for material shipped in accordance with this specification, shall be clearly stated in the purchase order, according to the provisions of ANSI/AWS A5.01. In the absence of any such statement in the purchase order, the supplier may ship the material with whatever testing is normally conducted on material of that classification, as specified in Schedule F, Table 1, of the ANSI/AWS A5.01. Testing in accordance with any other schedule in that table must be specifically required by the purchase order. In such cases, acceptance of the material shipped will be in accordance with those requirements.

A4. Certification

The act of placing the AWS specification and classification designations on the packaging enclosing the product, or the classification on the product itself, constitutes the supplier's (manufacturer's) certification that the product meets all of the requirements of the specification.

The only testing requirement implicit in this certification is that the manufacturer has actually conducted the tests required by the specification on material that is representative of that being shipped, and that the material met the requirements of the specification. Representative material, in this case, is any production run of that classification using the same formulation. "Certification" is not to be construed to mean that tests of any kind were necessarily conducted on samples of the specific material shipped. Tests on such material may or may not have been conducted. The basis for the certification required by the specification is the classification test of "representative material" cited above, and the "Manufacturer's Quality Assurance System" in ANSI/AWS A5.01.

A5. Ventilation During Welding

A5.1 Five major factors govern the quantity of fumes in the atmosphere to which welders and welding operators are exposed during welding:

(1) Dimensions of the space in which welding is done (with special regard to the height of the ceiling)

(2) Number of welders and welding operators working in that space

(3) Rate of evolution of fumes, gases, or dust, according to the materials and processes used

(4) The proximity of the welders or welding operators to the fumes as the fumes issue from the welding zone, and to the gases and dusts in the space in which they are working

(5) The ventilation provided to the space in which the welding is done

A5.2 American National Standard Z49.1, *Safety in Welding, Cutting, and Allied Processes* (published by the American Welding Society), discusses the ventilation that is required during welding and should be referred to for details. Attention is drawn particularly to the section of that document entitled Protection of Personnel and the General Area and Ventilation.

A6. Welding Considerations

A6.1 When examining the properties required of weld metal as a result of the tests made according to this specification, it should be recognized that in production, where the conditions and procedures may differ from those in this specification (electrode size, amperage, voltage, type and amount of shielding gas, position of welding, electrode extension, plate thickness, joint geometry, preheat and interpass temperatures, travel speed, surface condition, base-metal composition and dilution, for example), the properties of the weld metal may also differ. Moreover, these differences may be large or small.

A6.2 Since it has not been possible to specify one single detailed welding procedure for all products classi-

fied under any given classification in this specification, details of the welding procedure used in classifying each product should be recorded by the manufacturer and made available to the user, on request. The information should include each of the items referred to in A6.1, as well as the actual number of passes and layers required to complete the weld test assembly.

A6.3 The toughness requirements for the different classifications in this specification can be used as a guide in the selection of electrodes for applications requiring some degree of low temperature notch toughness. For an electrode of any given classification, there can be a considerable difference between the impact test results from one assembly to another, or even from one impact specimen to another, unless particular attention is given to the manner in which the weld is made and the test specimens are prepared (even the location and orientation of the specimen within the weld), the temperature of testing, and the operation of the testing machine.

A6.4 In Table 2, some electrodes are listed as suitable for single- and multiple-pass welds, while others are said to be suitable only for single-pass welds. For more information concerning this, see Section A7, Description and Intended Use of Flux Cored Electrodes.

A6.5 Hardenability. There are inherent differences in the effect of the carbon content of the weld deposit on hardenability, depending on whether the electrode was gas-shielded or self-shielded. Gas shielded electrodes generally employ a Mn-Si deoxidation system. The carbon content affects hardness in a manner which is typical of many carbon equivalent formulas published for carbon steel.

Most self-shielded electrodes utilize an aluminum-based alloy system to provide for protection and deoxidation. One of the effects of the aluminum is to modify the effect of carbon on hardenability. Hardness levels obtained with self-shielded electrodes will therefore be lower than the carbon content would indicate (when considered on the basis of typical carbon equivalent formulas).

A7. Description and Intended Use of Flux Cored Electrodes

This specification contains many different classifications of flux cored electrodes. The suffix in each classification (1 through 14, G and GS), indicates a general grouping of electrodes that contain similar flux or core components and which have similar usability characteristics. Some classifications (Table 2) are listed as being suitable for multiple- and single-pass welding, while others are said to be suitable only for single-pass welding. An electrode that is suitable for multiple-pass welding may also be suitable for a single pass welding.

The user should understand that the classifications listed for single-pass welding are more highly deoxidizing and can be used on base metals that have some rust or mill scale. When these electrodes are used for more than a single pass, these deoxidizers can build up as alloying elements and act to increase the strength and hardness of the weld metal. These same effects will also be observed when an electrode classified with CO_2 shielding gas is used with a less reactive gas (argon or combinations containing argon, for example).

A7.1 EXXT-1 and EXXT-1M Classifications. Electrodes of the EXXT-1 group are classified with CO_2 shielding gas. However, other gas mixtures (such as argon-CO_2) may be used to improve the arc characteristics, especially for out-of-position work, when recommended by the manufacturer. Increasing the amount of argon in the argon-CO_2 mixture will increase the manganese and silicon contents in the weld metal. The increase in manganese and silicon will increase the yield and tensile strengths and may affect impact properties.

Electrodes of the EXXT-1M group are classified with 75–80% argon/balance CO_2 shielding gas. Their use with argon/CO_2 shielding gas mixtures having reduced amounts of argon or with CO_2 shielding gas may result in some deterioration of arc characteristics and out-of-position welding characteristics. In addition, a reduction of the manganese and silicon contents in the weld will reduce yield and tensile strengths and may affect impact properties.

Both the EXXT-1 and EXXT-1M electrodes are designed for single- and multiple-pass welding using DCEP polarity. The larger diameters (usually $^5/_{64}$ in. [2.0 mm] and larger) are used for welding in the flat position and for welding fillet welds in the horizontal position (EX0T-1 and EX0T-1M). The smaller diameters (usually $^1/_{16}$ in. [1.6 mm] and smaller) are generally used for welding in all positions (EX1T-1 and EX1T-1M). The EXXT-1 and EXXT-1M electrodes are characterized by a spray transfer, low spatter loss, flat to slightly convex bead contour, and a moderate volume of slag which completely covers the weld bead. Most electrodes of this classification have a rutile base slag and produce high deposition rates.

A7.2 EXXT-2 and EXXT-2M Classifications. Electrodes of these classifications are essentially EXXT-1 and EXXT-1M with higher manganese or silicon, or both, and are designed primarily for single-pass welding

in the flat position and for welding fillet welds in the horizontal position. The higher levels of deoxidizers in these classifications allow single-pass welding of heavily oxidized or rimmed steel.

Weld metal composition requirements are not specified for single-pass electrodes, since checking the composition of the undiluted weld metal will not provide an indication of the composition of a single-pass weld. These electrodes give good mechanical properties in single-pass welds.

The manganese content and the tensile strength of the weld metal of multiple-pass welds made with EXXT-2 and EXXT-2M electrodes will be high. These electrodes can be used for welding base metals which have heavier mill scale, rust, or other foreign matter that cannot be tolerated by some electrodes of the EXXT-1 or EXXT-1M classifications. The arc transfer, welding characteristics and deposition rates of these electrodes are similar to those of the EXXT-1 or EXXT-1M classifications (see A7.1).

A7.3 EXXT-3 Classification. Electrodes of this classification are self-shielded, used on DCEP, and have a spray-type transfer. The slag system is designed to make very high welding speeds possible. The electrodes are used for single-pass welds in the flat, horizontal, and vertical (up to 20 degree incline) positions (downward progression) on sheet metal. Since these electrodes are sensitive to the effects of base-metal quenching, they are not generally recommended for the following:

(1) T- or lap joints in materials thicker than $^3/_{16}$ in. (4.8 mm)

(2) Butt, edge, or corner joints in materials thicker than $^1/_4$ in. (6.4 mm)

The electrode manufacturer should be consulted for specific recommendations.

A7.4 EXXT-4 Classification. Electrodes of this classification are self-shielded, operate on DCEP, and have a globular-type transfer. The slag system is designed to make very high deposition rates possible and to produce a weld that is very low in sulphur, which makes the weld very resistant to hot cracking. These electrodes are designed for low penetration beyond the root of the weld, enabling them to be used on joints which have been poorly fit, and for single- and multiple-pass welding.

A7.5 EXXT-5 and EXXT-5M Classifications. Electrodes of the EXXT-5 classification are designed to be used with CO_2 shielding gas; however, as with the EXXT-1 classification, argon-CO_2 mixtures may be used to reduce spatter. Electrodes of the EXXT-5M classification are designed for use with 75–80% argon/balance CO_2 shielding gas. Electrodes of the EX0T-5 and EX0T-5M classifications are used primarily for single- and multiple-pass welds in the flat position and for welding fillet welds in the horizontal position. These electrodes are characterized by a globular transfer, slightly convex bead contour, and a thin slag that may not completely cover the weld bead. These electrodes have a lime-fluoride base slag. Weld deposits produced by these electrodes typically have impact properties and hot and cold crack resistance that are superior to those obtained with rutile base slags. The EX1T-5 and EX1T-5M electrodes using DCEN, can be used for welding in all positions. However, the operator appeal of these electrodes is not as good as those with rutile base slags.

A7.6 EXXT-6 Classification. Electrodes of this classification are self-shielded, operate on DCEP, and have a spray-type transfer. The slag system is designed to give good low-temperature impact properties, good penetration into the root of the weld, and excellent slag removal, even in a deep groove. These electrodes are used for single- and multiple-pass welding in flat and horizontal positions.

A7.7 EXXT-7 Classification. Electrodes of this classification are self-shielded, operate on DCEN, and have a small droplet transfer to a spray-type transfer. The slag system is designed to allow the larger sizes to be used for high deposition rates in the horizontal and flat positions, and to allow the smaller sizes to be used for all welding positions. The electrodes are used for single- and multiple-pass welding and produce very low sulphur weld metal which is very resistant to cracking.

A7.8 EXXT-8 Classification. Electrodes of this classification are self-shielding, operate on DCEN, and have a small droplet or spray-type transfer. The electrodes are suitable for all welding positions and the weld metal has very good low temperature notch toughness and crack resistance. The electrodes are used for single- and multiple-pass welds.

A7.9 EXXT-9 and EXXT-9M Classifications. Electrodes of the EXXT-9 group are classified with CO_2 shielding gas. However, gas mixtures of argon-CO_2 are sometimes used to improve usability, especially for out-of-position applications. Increasing the amount of argon in the argon-CO_2 mixture will affect the metal analysis and mechanical properties of weld metal deposited by these electrodes, just as it will for weld metal deposited by EXXT-1 and EXXT-1M electrodes (see A7.1).

Electrodes of the EXXT-9M group are classified with a 75–80% argon/balance CO_2 shielding gas. Their use with argon/CO_2 shielding gas mixtures having reduced amounts of argon, or with CO_2 shielding gas, may result in some deterioration of arc characteristics and out-of-position welding characteristics. In addition, a reduction of the manganese and silicon contents in the weld will result, which will have some effect on properties of weld metal from these electrodes, just as it will on properties of weld metal deposited by EXXT-1 and EXXT-1M electrodes (see A7.1).

Both the EXXT-9 and EXXT-9M electrodes are designed for single- and multiple-pass welding. The larger diameters (usually $^5/_{64}$ in. [2.0 mm] and larger) are used for welding in the flat position and for welding fillet welds in the horizontal position. The smaller diameters (usually $^1/_{16}$ in. [1.6 mm] and smaller) are often used for welding in all positions.

The arc transfer, welding characteristics, and deposition rates of the EXXT-9 and EXXT-9M electrodes are similar to those of the EXXT-1 or EXXT-1M classifications (see A7.1). EXXT-9 and EXXT-9M electrodes are essentially EXXT-1 and EXXT-1M electrodes that deposit weld metal with improved impact properties.

Some electrodes in this classification require that joints be relatively clean and free of oil, excessive oxide, and scale in order that welds of radiographic quality can be obtained.

A7.10 EXXT-10 Classification. Electrodes of this classification are self-shielded, operate on DCEN, and have a small droplet transfer. The electrodes are used for single-pass welds at high travel speeds on material of any thickness in the flat, horizontal, and vertical (up to 20 degree incline) positions.

A7.11 EXXT-11 Classification. Electrodes of this classification are self-shielded, operate on DCEN, and have a smooth spray-type transfer. They are general purpose electrodes for single- and multiple-pass welding in all positions. Their use is generally not recommended on thicknesses greater than $^3/_4$ in. (19 mm) unless preheat and interpass temperature control are maintained. The electrode manufacturer should be consulted for specific recommendations.

A7.12 EXXT-12 and EXXT-12M Classifications. Electrodes of these classifications are essentially EXXT-1 and EXXT-1M electrodes which have been modified to improve impact toughness and to meet the lower manganese requirements of the A-1 Analysis Group in the ASME *Boiler and Pressure Vessel Code,* Section IX. They, therefore, have an accompanying decrease in tensile strength and hardness. Since welding procedures influence all weld metal properties, users are urged to check hardness on any application where a required hardness level is a requirement.

The arc transfer, welding characteristics, and deposition rates of the EXXT-12 and EXXT-12M electrodes are similar to those of the EXXT-1 and EXXT-1M classifications (see A7.1).

A7.13 EXXT-13 Classification. Electrodes of this classification are self-shielded and operate on DCEN, and are usually welded with a short-arc transfer. The slag system is designed so that these electrodes can be used in all positions for the root pass on circumferential pipe welds. The electrodes can be used on all pipe wall thicknesses, but are only recommended for the first pass. They generally are not recommended for multiple-pass welding.

A7.14 EXXT-14 Classification. Electrodes of this classification are self-shielded, operate on DCEN, and have a smooth spray-type transfer. The slag system is designed with characteristics so that these electrodes can be used to weld in all positions and also to make welds at high speed. They are used to make welds on sheet metal up to $^3/_{16}$ in. (4.8 mm) thick, and often are specifically designed for galvanized, aluminized, or other coated steels. Since these welding electrodes are sensitive to the effects of base-metal quenching, they are not generally recommended for the following:

(1) T- or lap joints in materials thicker than $^3/_{16}$ in. (4.8 mm)

(2) Butt, edge, or corner joints in materials thicker than $^1/_4$ in. (6.4 mm)

The electrode manufacturer should be consulted for specific recommendations.

A7.15 EXXT-G Classification. This classification is for multiple-pass electrodes that are not covered by any presently defined classification. Except for chemical requirements to assure a carbon steel deposit and the tensile strength, which is specified, the requirements for this classification are not specified. They are those that are agreed to by the purchaser and the supplier.

A7.16 EXXT-GS Classification. This classification is for single-pass electrodes that are not covered by any presently defined classification. Except for the tensile strength, which is specified, the requirements for this classification are not specified; they are agreed upon by the purchaser and supplier.

A8. Special Tests

A8.1 It is recognized that supplementary tests may need to be conducted to determine the suitability of these

welding electrodes for applications involving properties such as hardness, corrosion resistance, mechanical properties at higher or lower service temperatures, wear resistance, and suitability for welding combinations of dissimilar metals. Supplemental requirements as agreed between purchaser and supplier may be added to the purchase order following the guidance of ANSI/AWS A5.01.

A8.2 Diffusible Hydrogen Test

A8.2.1 Hydrogen-induced cracking of weld metal or the heat-affected zone generally is not a problem with carbon steels containing 0.3% or less carbon, nor with lower strength alloy steels. However, the electrodes classified in this specification are sometimes used to join higher carbon steels or low alloy, high-strength steels where hydrogen-induced cracking may be a serious problem.

A8.2.2 Flux cored arc welding is generally considered to be a low-hydrogen welding process. However, as the weld metal or heat-affected zone strength or hardness increases, the concentration of diffusible hydrogen that will cause cracking under given conditions of restraint and heat input becomes lower. It may be appropriate to evaluate the diffusible hydrogen produced during welding with a flux cored electrode.

A8.2.3 This specification has, therefore, included the use of optional designators for diffusible hydrogen (see Table 8) to indicate the maximum average value obtained under a clearly defined test condition. An optional supplemental designator "HZ" following the mandatory classification supplemental designator, if used, indicates an average diffusible hydrogen content of not more than "Z" ml/100 g of deposited metal when tested in the "as-received" condition in accordance with ANSI/AWS A4.3, *Standard Methods for Determination of the Diffusible Hydrogen Content of Martensitic, Bainitic, and Ferritic Steel Weld Metal Produced by Arc Welding.* Electrodes that are designated as meeting the lower or lowest hydrogen limits, as specified in Table 8, are also understood to be able to meet any higher hydrogen limits even though these are not necessarily designated along with the electrode classification. Therefore, as an example, an electrode designated as "H4" also meets "H8" and "H16" requirements without being designated as such. See Section 15, Diffusible Hydrogen Test, and Table 8.

A8.2.4 The user of this information is cautioned that actual fabrication conditions may result in different diffusible hydrogen values than those indicated by the designator.

A8.2.5 The use of a reference atmospheric condition during welding is necessitated because the arc is subject to atmospheric contamination when using either self-shielded or gas-shielded flux cored electrodes. Moisture from the air, distinct from that in the electrode, can enter the arc and subsequently the weld pool, contributing to the resulting observed diffusible hydrogen. This effect can be minimized by maintaining as short an arc length as possible consistent with a steady arc. Experience has shown that the effect of arc length is minor at the H16 level, but can be very significant at the H4 level. An electrode meeting the H4 requirements under the reference atmospheric conditions may not do so under conditions of high humidity at the time of welding, especially if a long arc length is maintained.

A8.2.6 Electrode extension also affects diffusible hydrogen with flux cored electrodes. In general, a longer electrode extension will preheat the electrode more, which causes some removal of hydrogen-bearing compounds (moisture and lubricants) before they reach the arc. The result of longer electrode extension can be reduced diffusible hydrogen. However, excessive electrode extension with external gas-shielded electrodes may cause some loss of gas shielding unless the contact tip is recessed in the gas cup. If the gas shielding is disturbed, more air may enter the arc and increase the diffusible hydrogen. This may also cause porosity due to nitrogen pickup.

A8.2.7 The reader is cautioned that the shielding gas itself can contribute significantly to diffusible hydrogen. Normally, welding grade shielding gases are intended to have very low dew points and very low impurity levels. This, however, is not always the case. Instances have occurred where a contaminated gas cylinder resulted in a significant increase of diffusible hydrogen in the weld metal. In case of doubt, a check of gas dew point is suggested. A dew point of −40°F (−40°C) or lower is considered satisfactory for most applications.

A8.2.8 Flux cored electrodes can absorb significant moisture if stored in a humid environment in damaged or open packages, or especially if unprotected for long periods of time. In the worst cases of high humidity, even overnight exposure of unprotected electrodes can lead to a significant increase of diffusible hydrogen. In the event the electrode has been exposed, the manufacturer should be consulted regarding probable damage to low-hydrogen characteristics and possible reconditioning of the electrodes.

A8.2.9 Not all flux cored electrode classifications may be available in the H16, H8, or H4 diffusible hydrogen levels. The manufacturer of a given electrode should be consulted for availability of products meeting these limits.

A8.2 Aging of Tensile Specimens. Weld metals may contain significant quantities of hydrogen for some time after they have been made. Most of this hydrogen gradually escapes over time. This may take several weeks at room temperature or several hours at elevated temperatures. As a result of this eventual change in hydrogen level, ductility of the weld metal increases towards its inherent value, while yield, tensile, and impact strengths remain relatively unchanged. This specification permits the aging of the tensile test specimens at elevated temperatures up to 220°F for up to 48 hours before subjecting them to tension testing. The purpose of this treatment is to facilitate removal of hydrogen from the test specimen in order to minimize discrepancies in testing.

Aging treatments are sometimes used for low-hydrogen electrode deposits, especially when testing high-strength deposits. Note that aging may involve holding test specimens at room temperature for several days or holding at a higher temperature for a shorter period of time. Consequently, users are cautioned to employ adequate preheat and interpass temperatures to avoid the deleterious effects of hydrogen in production welds.

A9. Safety Considerations

A9.1 Burn Protection. Molten metal, sparks, slag, and hot work surfaces are produced by welding, cutting, and allied processes. These can cause burns if precautionary measures are not used. Workers should wear protective clothing made of fire-resistant material. Pant cuffs, open pockets, or other places on clothing that can catch and retain molten metal or sparks should not be worn. High-top shoes or leather leggings and fire-resistant gloves should be worn. Pant legs should be worn over the outside of high-top shoes. Helmets or hand shields that provide protection for the face, neck, and ears, and a protective head covering should be used. In addition, appropriate eye protection should be used.

When welding overhead or in confined spaces, ear plugs to prevent weld spatter from entering the ear canal should be worn in combination with goggles, or the equivalent, to give added eye protection. Clothing should be kept free of grease and oil. Combustible materials should not be carried in pockets. If any combustible substance has been spilled on clothing, a change to clean, fire-resistant clothing should be made before working with open arcs or flames. Aprons, cape sleeves, leggings, and shoulder covers with bibs designed for welding service should be used.

Where welding or cutting of unusually thick base metal is involved, sheet metal shields should be used for extra protection. Mechanization of highly hazardous processes or jobs should be considered. Other personnel in the work area should be protected by the use of noncombustible screens or by the use of appropriate protection as described in the previous paragraph.

Before leaving a work area, hot work pieces should be marked to alert other persons of this hazard. No attempt should be made to repair or disconnect electrical equipment when it is under load; disconnection under load produces arcing of the contacts and may cause burns or shock, or both. (Note: Burns can be caused by touching hot equipment such as electrode holders, tips, and nozzles. Therefore, insulated gloves should be worn when these items are handled, unless an adequate cooling period has been allowed before touching.)

The following references are for more detailed information on personal protection:

(1) American National Standards Institute. *Practice for Occupational and Educational Eye and Face Protection,* ANSI/ASC Z87.1. New York: American National Standards Institute.

(2) American National Standards Institute. *Safety-Toe Footwear,* ANSI/ASC Z41.1. New York: American National Standards Institute.

(3) American Welding Society. *Safety in Welding, Cutting, and Allied Processes,* ANSI/ASC Z49.1. Miami, FL: American Welding Society.

(4) OSHA, *Code of Federal Regulations,* Title 29—Labor, Chapter XVII, Part 1910. Washington, D.C.: U. S. Government Printing Office.[5]

A9.2 Electrical Hazards. Electric shock can kill. However, it can be avoided. Live electrical parts should not be touched. The manufacturer's instructions and recommended safe practices should be read and understood. Faulty installation, improper grounding, and incorrect operation and maintenance of electrical equipment are all sources of danger.

All electrical equipment and workpieces should be grounded. The workpiece lead is not a ground lead; it is used only to complete the welding circuit. A separate connection is required to ground the workpiece.

[5] OSHA standards may be obtained from the U. S. Government Printing Office, Washington, D.C. 20402.

The correct cable size should be used since sustained overloading will cause cable failure and can result in possible electrical shock or fire hazard. All electrical connections should be tight, clean, and dry. Poor connections can overheat and even melt. Further, they can produce dangerous arcs and sparks. Water, grease, or dirt should not be allowed to accumulate on plugs, sockets, or electrical units. Moisture can conduct electricity. To prevent shock, the work area, equipment, and clothing should be kept dry at all times. Welders should wear dry gloves and rubber-soled shoes, or stand on a dry board or insulated platform. Cables and connections should be kept in good condition. Improper or worn electrical connections may create conditions that could cause electrical shock or short circuits. Worn, damaged, or bare cables should not be used. Open circuit voltage should be avoided. When several welders are working with arcs of different polarities, or when a number of alternating current machines are being used, the open circuit voltages can be additive. The added voltages increase the severity of the shock hazard.

In case of electric shock, the power should be turned off. If the rescuer must resort to pulling the victim from the live contact, nonconducting materials should be used. If the victim is not breathing, cardiopulmonary resuscitation (CPR) should be administered as soon as contact with the electrical source is broken. A physician should be called and CPR continued until breathing has been restored, or until a physician has arrived. Electrical burns are treated as thermal burns; that is, clean, cold (iced) compresses should be applied. Contamination should be avoided; the area should be covered with a clean, dry dressing; and the patient should be transported to medical assistance.

Recognizing safety standards such as ANSI/ASC Z49.1 and NFPA No. 70, *The National Electrical Code* should be followed.[6]

A9.3 Fumes and Gases. Many welding, cutting, and allied processes produce fumes and gases which may be harmful to health. Fumes are solid particles which originate from welding electrodes and fluxes, the base metal, and any coatings present on the base metal. Gases are produced during the welding process or may be produced by the effects of process radiation on the surrounding environment. Management, welders, and other personnel should be aware of the effects of these fumes and gases. The amount and composition of these fumes and gases depend upon the composition of the electrode and base metal, welding process, current level, arc length, and other factors.

The possible effects of overexposure range from irritation of eyes, skin, and respiratory system to more severe complications. Effects may occur immediately or at some later time. Fumes can cause symptoms such as nausea, headaches, dizziness, and metal fume fever. The possibility of more serious health effects exists when especially toxic materials are involved. In confined spaces, the shielding gases and fumes might displace breathing air and cause asphyxiation. One's head should always be kept out of the fumes. Sufficient ventilation, exhaust at the arc, or both, should be used to keep fumes and gases from your breathing zone and the general area.

In some cases, natural air movement will provide enough ventilation. Where ventilation may be questionable, air sampling should be used to determine if corrective measures should be applied.

More detailed information on fumes and gases produced by the various welding processes may be found in the following:

(1) The permissible exposure limits required by OSHA can be found in *Code of Federal Regulations,* Title 29—Labor, Chapter XVII, Part 1910.

(2) The recommended threshold limit values for these fumes and gases may be found in *Threshold Limit Values for Chemical Substances and Physical Agents in the Workroom Environment* published by the American Conference of Governmental Industrial Hygienists (ACGIH).[7]

(3) The results of an AWS-funded study are available in a report entitled, *Fumes and Gases in the Welding Environment.*

A9.4 Radiation. Welding, cutting, and allied operations may produce radiant energy (radiation) harmful to health. One should become acquainted with the effects of this radiant energy.

Radiant energy may be ionizing (such as x-rays), or nonionizing (such as ultraviolet, visible light, or infrared). Radiation can produce a variety of effects such as skin burns and eye damage, depending on the radiant energy's wavelength and intensity, if excessive exposure occurs.

A9.4.1 Ionizing Radiation. Ionizing radiation is produced by the electron beam welding process. It is ordinarily controlled within acceptance limits by use of suitable shielding enclosing the welding area.

[6] NFPA documents are available from the National Fire Protection Association, Batterymarch Park, Quincy, MA 02269

[7] ACGIH documents are available from the American Conference of Governmental Industrial Hygienists, 6550 Glenway Avenue, Building D-5, Cincinnati, OH 45211.

A9.4.2 Nonionizing Radiation. The intensity and wavelengths of nonionizing radiant energy produced depend on many factors, such as the process, welding parameters, electrode and base-metal composition, fluxes, and any coating or plating on the base metal. Some processes such as resistance welding and cold pressure welding ordinarily produce negligible quantities of radiant energy. However, most arc welding and cutting processes (except submerged arc when used properly), laser welding and torch welding, cutting, brazing, or soldering can produce quantities of nonionizing radiation such that precautionary measures are necessary.

Protection from possible harmful effects caused by non-ionizing radiant energy from welding include the following measures:

(1) One should not look at welding arcs except through welding filter plates which meet the requirements of ANSI/ASC Z87.1, *Practice for Occupational and Educational Eye and Face Protection.* It should be noted that transparent welding curtains are not intended as welding filter plates, but rather are intended to protect a passerby from incidental exposure.

(2) Exposed skin should be protected with adequate gloves and clothing as specified in ANSI/ASC Z49.1, *Safety in Welding, Cutting, and Allied Processes.*

(3) Reflections from welding arcs should be avoided, and all personnel should be protected from intense reflections. (Note: Paints using pigments of substantially zinc oxide or titanium dioxide have a lower reflectance for ultraviolet radiation.)

(4) Screens, curtains, or adequate distance from aisles, walkways, etc., should be used to avoid exposing passersby to welding operations.

(5) Safety glasses with UV protective side shields have been shown to provide some beneficial protection from ultraviolet radiation produced by welding arcs.

A9.4.3 Ionizing radiation information sources include the following:

(1) American Welding Society. AWS F2.1-78, *Recommended Safe Practices for Electron Beam Welding and Cutting.* Miami, FL: American Welding Society.

(2) Manufacturer's product information literature.

A9.4.4 Nonionizing radiation information sources include:

(1) American National Standards Institute. *Safe Use of Lasers,* ANSI/ASC Z136.1. New York: American National Standards Institute.

(2) American National Standards Institute. *Practice for Occupational and Educational Eye and Face Protection,* ANSI/ASC Z87.1. New York: American National Standards Institute.

(3) American Welding Society. *Safety in Welding, Cutting, and Allied Processes,* ANSI/ASC Z87.1. Miami, FL: American Welding Society.

(4) Hinrichs, J. F. "Project committee on radiation-summary report." *Welding Journal* 57(1):62–65, 1978.

(5) Marshall, W. J., Sliney, D. H., et al. "Optical radiation levels produced by air-carbon arc cutting processes." *Welding Journal* 59(3):43–46, 1980.

(6) Moss, C. E. and Murray, W. E. "Optical radiation levels produced in gas welding, torch brazing, and oxygen cutting." *Welding Journal* 58(9):37–46, 1979.

(7) Moss, C. E. "Optical radiation transmission levels through transparent welding Curtains." *Welding Journal* 58(3):69s–75s, 1979.

(8) National Technical Information Service. Nonionizing Radiation Protection Special Study No. 42-0053-77, *Evaluation of the Potential Hazards from Actinic Ultraviolet Radiation Generated by Electric Welding and Cutting Arcs.* Springfield, VA: National Technical Information Service.[8]

(9) —. Non-Ionizing Radiation Protection Special Study No. 42-0312-77, *Evaluation of the Potential Retina Hazards from Optical Radiation Generated by Electrical Welding and Cutting Arcs.* Springfield, VA: National Technical Information Service.

[8] National Technical Information documents are available from the National Technical Information Service, Springfield, VA 22161.

SPECIFICATION FOR COMPOSITE SURFACING WELDING RODS AND ELECTRODES

SFA-5.21

(Identical with AWS Specification A5.21-80)

Scope

This specification prescribes requirements for composite surfacing welding rods and electrodes. The specification covers straight length bare and covered composite welding rods for use with the oxyfuel, gas tungsten arc, and atomic hydrogen welding processes. This specification also covers straight length bare and covered electrodes for use with the shielded metal arc welding process.

Note 1. The values stated in U.S. customary units are to be regarded as the standard. The SI units are given as equivalent values to the U.S. customary units. The published sizes and dimensions in the two systems are not identical, and, for this reason, conversion from a published size or dimension in one system will not always coincide with the published size or dimension in the other. Suitable conversions encompassing published sizes of both, can be made, however, if appropriate tolerances are applied in each case.

Note 2. No attempt has made to classify all filler metals within the limits of the above scope. This specification covers only those filler metals that have approximate industrial standardization and for which technical data were available. It is intended that subsequent editions of this specification will incorporate these other filler metals as industry standardization occurs. Certain aspects of this specification may be helpful or pertinent to the gas metal arc welding process, but such coverage is only incidental.

1. Classification and Acceptance

1.1 Classification. Composite surfacing welding rods and electrodes are classified on the basis of the chemical composition of the weld metal with the exception of the composite tungsten-carbide welding rods and electrodes (see Tables 1 and 2) Composite tungsten-carbide surfacing welding rods and electrodes are classified on the basis of the chemical composition of the carbon steel tube (see Table 3), the chemical composition of the tungsten-carbide granules (see Table 4), and the mesh size distribution and percent by weight of the tungsten-carbide granules contained in the carbon steel tube (see Tables 5 and 6) Any composite surfacing welding rod or electrode classified under one classification shall not be classified under any other classification of this specification.

1.2 Acceptance. At the option and expense of the purchaser, any or all of the test requirements of this specification may be used as a basis for acceptance of the products covered by this specification. AWS A5.01, Filler Metal Procurement Guidelines, may be referred to for lot definitions and frequency of testing.

1.3 Chemical Composition Requirements. The chemical composition of the welding rods and electrode deposits (except tungsten-carbide rods or electrodes) shall conform to the requirements prescribed for their classification in Tables 1 and 2, respectively. The chemical composition of the carbon steel tube and tungsten-carbide granules of tungsten-carbide rods and electrodes shall conform to the requirements of Tables 3 and 4, respectively. The details of the test are specified in 3.4.

1.4 Usability. A test, as described in 3.3, is prescribed to demonstrate the usability of the filler metals. In order to be classified under this specification, the filler metals shall be capable of yielding the following usability test results:

1.4.1 For welding rods, the metal shall flow freely and smoothly over the surface of the plate without boiling or excessive activity.

1.4.2 Electrodes shall operate smoothly, without excessive spatter, when used within the current ranges recommended by the manufacturer. Slag, if present, shall be readily removed with hand tools.

TABLE 1
CHEMICAL REQUIREMENTS FOR COMPOSITE SURFACING WELDING RODS, PERCENT

AWS Classification	Carbon	Manganese	Tungsten	Chromium	Molybdenum	Iron	Vanadium	Silicon	Total other elements
RFe5-A	0.7 to 1.0	0.50	5.0 to 7.0	3.0 to 5.0	4.0 to 6.0	remainder	1.0 to 2.5	0.50	1.0
RFe5-B	0.5 to 0.9	0.50	1.0 to 2.5	3.0 to 5.0	5.0 to 9.5	remainder	0.8 to 1.3	0.50	1.0
RFeCr-Al	3.7 to 5.0	2.0 to 6.0	—	27.0 to 35.0	—	remainder	—	1.0 to 2.5	1.0

Note 1. Analysis shall be made for the elements for which specific values are shown in this table. If, however, the presence of other elements is indicated in the course of routine analysis, further analysis shall be made to determine that the total of these other elements is not present in excess of the limits specified for "Total other elements" in the last column in the table.
Note 2. Single values shown are maximum percentages, except where otherwise specified.

TABLE 2
CHEMICAL REQUIREMENTS FOR COMPOSITE SURFACING ELECTRODES, PERCENT

AWS Classification	Carbon	Manganese	Tungsten	Nickel	Chromium	Molybdenum	Iron	Vanadium	Silicon	Phosphorous	Total other elements
EFe5-A	0.7 to 1.0	0.50	5.0 to 7.0	—	3.0 to 5.0	4.0 to 6.0	remainder	1.0 to 2.5	0.70	—	1.0
EFe5-B	0.5 to 0.9	0.50	1.0 to 2.5	—	3.0 to 5.0	5.0 to 9.5	remainder	0.8 to 1.3	0.70	—	1.0
EFe5-C	0.3 to 0.5	0.50	1.0 to 2.5	—	3.0 to 5.0	5.0 to 9.0	remainder	0.8 to 1.2	0.70	—	1.0
EFeMn-A	0.5 to 0.9	11.0 to 16.0	—	2.75 to 6.0	0.50	—	remainder	—	1.3	0.03	1.0
EFeMn-B	0.5 to 0.9	11.0 to 16.0	—	—	0.50	0.6 to 1.4	remainder	—	0.3 to 1.3	0.03	1.0
EFeCr-Al	3.0 to 5.0	4.0 to 8.0	—	—	26.0 to 32.0	2.0	remainder	—	1.0 to 2.5	—	1.0

Note 1. Analysis shall be made for the elements for which specific values are shown in this table. If, however, the presence of other elements is indicated in the course of routine analysis, further analysis shall be made to determine that the total of these other elements is not present in excess of the limits specified for "Total other elements" in the last column in the table.
Note 2. Single values shown are maximum percentages, except where otherwise specified.

TABLE 3
CHEMICAL REQUIREMENTS FOR CARBON STEEL TUBES FOR TUNGSTEN-CARBIDE WELDING RODS AND ELECTRODES, PERCENT

Carbon	Manganese	Phosphorus	Sulfur	Silicon	Nickel	Chromium	Molybdenum	Vanadium
0.10	0.45	0.02	0.03	0.01	0.30[a]	0.20[a]	0.30[a]	0.08[a]

a. Single values shown are nominal percentages, except for those marked with footnote a which indicate maximum percentages.

TABLE 4
CHEMICAL REQUIREMENTS FOR TUNGSTEN-CARBIDE GRANULES, PERCENT

Carbon	Cobalt	Tungsten	Nickel	Molybdenum	Iron	Silicon
3.6 to 4.2	0.3	94.0 min.	0.3	0.60	0.5	0.3

Note 1. Single values shown are maximum percentages, except where otherwise indicated.
Note 2. Chemical analysis shall be made on tungsten-carbide granules that have been well cleaned to remove all flux or other surface contamination.

TABLE 5
MESH SIZE AND WEIGHT PERCENT OF TUNGSTEN-CARBIDE GRANULES CONTAINED IN TUNGSTEN-CARBIDE WELDING RODS

AWS Classification	Mesh size of tungsten-carbide granules		Weight percent of tungsten-carbide granules
	Tyler standard	U.S. standard	
RWC-5/8	thru 5 – on 8	thru 5 – on 8	60
RWC-8/12	thru 8 – on 10	thru 8 – on 12	60
RWC-12/20	thru 10 – on 20	thru 12 – on 20	60
RWC-20/30	thru 20 – on 28	thru 20 – on 30	60
RWC-30/40	thru 28 – on 35	thru 30 – on 40	60
RWC-30	thru 28	thru 30	60
RWC-40	thru 35	thru 40	60
RWC-40/120	thru 35 – on 112	thru 40 – on 120	60

Note 1. The tolerances on the weight percent of tungsten-carbide granules in the welding rod shall be plus 4.0 percent and minus 1.5 percent of the amount specified.
Note 2. The mesh size of the tungsten-carbide granules may vary from that specified above provided that no more than 5.0 percent maximum by weight of the granules is retained on the thru or "pass" sieve, and that no more than 20.0 percent maximum by weight passes the on or "hold" sieve.

TABLE 6
MESH SIZE AND WEIGHT PERCENT OF TUNGSTEN-CARBIDE GRANULES CONTAINED IN TUNGSTEN-CARBIDE ELECTRODES

AWS Classification	Mesh size of tungsten-carbide granules		Weight percent of tungsten-carbide granules
	Tyler standard	U.S. standard	
EWC-12/30	thru 10-on 28	thru 12-on 20	60
EWC-20/30	thru 20-on 28	thru 20-on 30	60
EWC-30/40	thru 28-on 35	thru 30-on 40	60
EWC-40	thru 35	thru 40	60
EWC-40/120	thru 35-on 115	thru 40-on 120	60

Note 1. The tolerances on the weight percent of tungsten-carbide granules in the electrode shall be plus 4.0 percent and minus 1.5 percent of the amount specified.
Note 2. The mesh size of the tungsten-carbide granules may vary from that specified above, provided that no more than 5.0 percent maximum by weight of the granules is retained on the thru or "pass" sieve, and that no more than 20.0 percent maximum by weight passes the on or "hold" sieve.

1.4.3 The surface of the test pad, after being ground, shall be free from injurious defects visible to the naked eye.

1.5 Retests. If any test fails, two addditional tests of that particular test, as taken from the original test assembly or from new test assemblies, shall be performed, and the results of both shall meet the requirements prescribed for that test.

2. Manufacture

2.1 Method of Manufacture. The filler metal may be made by any method that will yield a product conforming to the requirements of this specification.

2.2 Welding Rods and Bare Electrodes, Finish and Uniformity. Composite welding rods and bare electrodes shall be of uniform quality and free from segregation, oxides, slivers, depressions, scratches (excluding seams), scale, or other irregularities that would adversely affect the welding properties or the operation of the welding equipment.

2.3 Covered Electrodes

2.3.1 The covering on covered electrodes of all sizes shall be concentric to the extent that the maximum core-plus-one-covering dimension shall not exceed the minimum core-plus-one-covering dimension by more than 7 percent of the minimum core-plus-one-covering dimension for composite core wire electrodes, provided that in any case no "fingernailing"[1] shall occur during welding.

The concentricity shall be measured by any suitable means.

2.3.2 The covering shall be such that it is not readily damaged by ordinary handling.

2.3.3 The covering shall be such that heating of the electrode during welding shall not cause injurious blistering or flaking of the covering within the ranges of current recommended by the manufacturer.

2.3.4 The composite core and covering shall be free of defects that would interfere with uniform performance of the electrodes.

2.4 Exposed Core. Covered electrodes for manual welding shall be bare or free from coating for a distance of about $\frac{3}{4}$ in. (20 mm), but not more than 1-$\frac{1}{4}$ in. (32 mm), for making contact with the holder. The arc end of covered electrodes shall be sufficiently bare to permit easy striking of the arc. The length of the bare portion of the arc end (measured from the end to the point where full cross section of the covering is obtained) shall not exceed $\frac{1}{8}$ in. (3.2 mm) or the diameter of the composite core, whichever is smaller.

[1] This term indicates that the electrode covering, at the end, is being consumed unevenly around the circumference of the core wire. Thus, instead of the covering remaining symmetrical with respect to the core wire, it protrudes beyond the core wire in much the same manner as a fingernail protrudes beyond the end of a finger.

2.5 Standard Sizes and Lengths

2.5.1 Standard sizes and lengths of welding rods are shown in Table 7. Standard sizes and lengths of electrodes are shown in Table 8.

2.5.2 Standard sieve analyses for the tungsten-carbide granules contained in the tubular tungsten-carbide welding rods and electrodes shall be as shown in Tables 5 and 6. Sieve analyses shall be made in accordance with ASTM B214, Sieve Analyses of Granular Metal Powders.[2] Special Sieve analyses, other than the standard ones, shall be as agreed upon by the supplier and the purchaser.

2.6 Packaging. Welding rods and electrodes shall be suitably packaged to protect against damage during handling, shipping, or under normal dry storage conditions in bundles or containers of 5, 10, 25, 50, 60, or 100 lb (2.3, 4.5, 11, 23, 27, or 45 kg) net weight.[3]

2.7 Marking

2.7.1 The outside of each unit package shall be legibly marked with the following information:

2.7.1.1 Specification and classification numbers

2.7.1.2 Standard size and net weight

2.7.1.3 Lot, control, or heat number

2.7.2 Marking of any or all overpacking of unit packages with items listed in 2.7.1 shall be optional with the manufacturer.

2.7.3 For other than oxyfuel rods, all packages of filler metal, or all individually packaged units enclosed within a larger package(s), shall carry the following precautionary labeling or its equivalent, as a minimum, prominently displayed in legible type:

WARNING: Protect yourself and others. Read and understand this label.

TABLE 7
STANDARD SIZES AND LENGTHS OF COMPOSITE WELDING RODS

AWS Classification	Diameter,[a] in.	Diameter,[a] mm	Length,[b] in.	Length,[b] mm
RFe5-A	1/8	3.2	14	350
	5/32	4.0		
RFe5-B	3/16	4.8	18	450
	1/4	6.4		
RFeCr-A1	5/16	8.0	28	700
	3/8	9.5		
RWC-5/8	3/8	9.5	14	350
			18	450
			28	700
RWC-8/12	1/4	6.4	14	350
	3/8	9.5	18	450
			28	700
RWC-12/20	3/16[c]	4.8[c]	14	350
	1/4	6.4	18	450
	3/8	9.5	28	700
RWC-20/30	5/32	4.0		
	3/16	4.8	14	350
	1/4	6.4	18	450
	3/8	9.5	28	700
RWC-30/40	1/8	3.2		
	5/32	4.0	14	350
	3/16[c]	4.8[c]	18	450
	1/4	6.4	28	700
	3/8	9.5		
RWC-30	1/8	3.2	14	350
	3/16[c]	4.8[c]	18	450
			28	700
RWC-40	1/8	3.2	14	350
	3/16	4.8	18	450
			28	700
RWC-40/120	1/8	3.2		
	5/32	4.0	14	350
	3/16[c]	4.8[c]	18	450
	1/4	6.4	28	700

a. Diameter of composite welding rods, measured at approximately 90 deg from the seam, shall not vary more than ± 20 percent from the nominal.
b. Lengths shall not vary more than the following from the standard:
28 in. (700 mm) and shorter. . . . . ±1/4 in. (6.4 mm).
36 in. (900 mm) . . . . . ±3/8 in. (10 mm).
c. The diameter of the 3/16 in. (4.8 mm) size may vary + 30 percent from the nominal size.

[2] ASTM standards can be obtained from the American Society for Testing and Materials, 100 Barr Harbor Drive, West Conshohocken, PA 19428-2959.

[3] Other standard weights are available upon agreement between purchaser and supplier.

TABLE 8
STANDARD SIZES AND LENGTHS OF COMPOSITE ELECTRODES

AWS Classification	Diameter,[a] in.	Diameter,[a] mm	Length, in.	Length, mm
			14	350
EFe5-A	1/8	3.2	18	450
EFe5-B	5/32	4.0		
EFe5-C	3/16[c]	4.8[c]		
EFeMn-A	1/4	6.4	14	350
EFeMn-B	5/16	8.0		
EFeCr-A1	3/8	9.5		
EWC-12/30	1/4	6.4	14	350
EWC-20/30	3/16	4.8[c]	14	350
EWC-30/40	1/8	3.2	14	350
EWC-40	1/8	3.2	14	350
	3/16[c]	4.8[c]		
EWC-40/120	1/8	3.2	14	350
	5/32	4.0		
	3/16[c]	4.8[c]		
	1/4	6.4		

a. Diameter of composite electrodes, measured approximately 90 deg from the seam, shall not vary more than ±20 percent from the nominal.
b. Lengths of composite electrodes shall not vary more than ±1/4 in. (10 mm) from the nominal.
c. The diameter of the 3/16 in. (4.8 mm) size may vary +30 percent from the nominal size.

FUMES AND GASES can be dangerous to your health. ARC RAYS can injure eyes and burn skin. ELECTRIC SHOCK can kill.

- Read and understand the manufacturer's instructions and your employer's safety practices.
- Keep your head out of the fumes.
- Use enough ventilation or exhaust at the flame, or both, to keep fumes and gases from your breathing zone and the general area.
- Wear correct eye, ear, and body protection.
- See American Welding National Standard Z49.1, "Safety in Welding and Cutting," published by the American Welding Society, 2501 N.W. 7th Street, Miami, Florida, 33125; OSHA Safety and Health Standards, 29 CFR 1910, available from the U.S. Government Printing Office, Washington, D.C. 20402.

Do Not Remove This Label

2.7.4 For oxyfuel rods, all packages of filler metal, or all individually packaged units enclosed within a larger package(s), shall carry the following precautionary labeling or its equivalent, as a minimum, prominently displayed in legible type:

WARNING: Protect yourself and others. Read and understand this label.

FUMES AND GASES can be dangerous to your health. HEAT RAYS (INFRARED RADIATION from flame or hot metal) can injure eyes.

- Read and understand the manufacturer's instructions and your employer's safety practices.
- Keep your head out of the fumes.
- Use enough ventilation or exhaust at the flame, or both, to keep fumes and gases from your breathing zone and the general area.
- Wear correct eye, ear, and body protection.
- See American Welding National Standard Z49.1, "Safety in Welding and Cutting," published by the American Welding Society, 2501 N.W. 7th Street, Miami, Florida, 33125; OSHA Safety and Health Standards, 29 CFR 1910, available from the U.S. Government Printing Office, Washington, D.C. 20402.

Do Not Remove This Label

2.8 Electrode Identification. All covered electrodes shall be identified in accordance with the following:

2.8.1 At least one legible imprint of the applicable AWS classification shall be applied to the electrode covering as near as practical to the grip end of the core wire, and within 2-1/2 in. (65 mm) of that grip end.

2.8.2 The numbers and letters of the imprinted electrode classification shall be of bold block type and of sufficient size to be readable.

2.8.3 The ink used for imprinting shall provide sufficient contrast with the electrode covering in order that the numbers and letters of the electrode classification shall be readable before and after normal welding applications.

2.8.4 The prefix letter E in the electrode classification may be omitted from the imprint on the electrode covering.

2.9 Rounding-Off Procedures. For purposes of determining conformance with this specification, an observed or calculated value shall be rounded off to the nearest unit in the last right-hand place of figures used in expressing the limiting value for other values in

accordance with the rounding-off method of ASTM E29, Recommended Practice for Indicating Which Places of Figures are to be Considered Significant in Specified Limiting Values.

2.10 Certification. For all material furnished under this specification, the manufacturer certifies (by meeting the requirements of 2.7) that the material, or representative material, has passed the tests required for classification by this specification. When required by the purchaser, the manufacturer shall furnish a copy of the results of those tests.

3. Details of Tests

3.1 Required Tests. The tests specified in 1.3 and 1.4 shall be conducted in accordance with the requirements of this Section 3. Usability tests and chemical analysis may be made on welding rods and electrodes of any size.

3.2 Material for Test Plates. The base metals for both the usability test and chemical analysis shall conform to one of the following specifications or their equivalent:

3.2.1 ASTM Specification A285, Pressure Vessel Plates Carbon Steel Low and Intermediate Tensile Strength, Grade A or equivalent.

3.2.2 ASTM Specification A36, Structural Steel.

3.3 Usability Test

3.3.1 A test pad shall be prepared using techniques, position, and other factors as specified by the manufacturer.

3.3.2 The surface of the pad shall be ground smooth and clean, after which the surface shall be visually examined.

3.4 Chemical Analysis

3.4.1 Chemical analysis of composite welding rods and electrodes:

3.4.1.1 All surfacing on the chemical analysis pad shall be done in the flat position.

3.4.1.2 For covered electrodes and RFeX-X rods, the test pad shall be prepared as shown in Fig. 1, using the welding procedures specified by the manufacturer as to factors not covered herein. The full length of each covered electrode shall be used, with the stub length not to exceed 1-3/4 in. (45 mm).

3.4.1.3 The top surface of the test pad shall be removed and discarded, and an adequate sample of weld metal, sufficient for retest, if necessary, shall then be removed from the test pad by any appropriate means. Postheat treatment may be used to soften the test pad to facilitate removal. Metal for the sample shall not be removed closer than 1/4 in. (6.4 mm) from the base metal. No oil or other lubricant shall be used when removing the sample.

3.4.1.4 Chemical analysis may be made by any suitable method agreed upon by the manufacturer and the purchaser.

3.4.2 Chemical analysis of carbon steel tubes for tungsten-carbide welding rods and electrodes:

3.4.2.1 The chemical composition of the carbon steel tube and the tungsten-carbide granules shall be determined separately. Prior to beginning analysis of the carbon steel tube, determine the percent by weight of the tungsten-carbide in the tube using the following procedure:

(1) Record the weight of one or more tungsten-carbide welding rods or electrodes after removing any coatings present.

(2) Remove the tungsten-carbide from the tube and clean it by washing with water and treating with 1-1 hydrochloric acid, as required, to remove any flux, powdered iron, graphite, etc. Heating of the acid may be required. A hot or cold 1-1 hydrochloric acid will not attack cast tungsten-carbide an appreciable amount in less than an hour.

(3) Weigh the cleaned and dried tungsten-carbide granules and calculate the percent tungsten-carbide from the initial weight of the tube.

3.4.2.2 An adequate sample of the carbon steel tube, sufficient for retest if necessary, shall be obtained to make the prescribed chemical analysis.

3.4.2.3 Chemical analysis may be made by any suitable method agreed upon by the supplier and the purchaser. In case of dispute, the procedure outlined in the latest edition of ASTM E350, Standard Methods for Chemical Analysis of Carbon Steel, Low Alloy Steel, Silicon Electrical Steel, Ingot Iron, and Wrought Iron, shall be the reference method.

3.4.3 Chemical analysis of tungsten-carbide granules from tungsten-carbide welding rods and electrodes:

3.4.3.1 The sample of tungsten-carbide granules for chemical analysis should be thoroughly cleaned. If the washing and treating with 1-1 hydrochloric acid

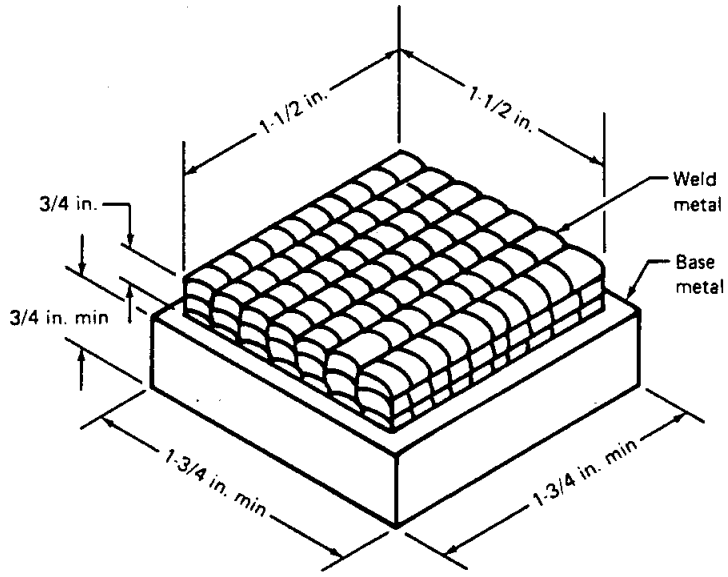

SI Equivalents

in.	mm
3/4	19
1-1/2	38
1-3/4	44

FIG. 1 CHEMICAL ANALYSIS TEST PAD

has not cleaned the granules, a light etch may be required. Since the tungsten-carbide granules will dissolve in concentrated nitric acid containing hydrofluoric acid, the sample to be cleaned shall be covered with nitric acid in a platinum or pyrex glass container and heated while hydrofluoric acid is added drop by drop until the particles are clean.

3.4.3.2 After the tungsten-carbide particles have been cleaned, the mesh size distribution shall be determined by the method cited in 2.5.2.

3.4.3.3 Chemical analysis of the cleaned tungsten-carbide granules may be made by any suitable method agreed upon by the supplier and the purchaser.

Appendix: Guide to AWS Classification of Composite Surfacing Welding Rods and Electrodes

A1. Introduction and Classification System

A1.1 Introduction. This guide is appended to the specification as a source of information; *it is not mandatory and does not form a part of the specification.*

The specification itself is intended to provide both the manufacturer and the purchaser with a means of production control and a basis of acceptance through mutually acceptable, sound, standard requirements.

This guide has been prepared as an aid to prospective users of the welding rods and electrodes classified by the specification in determining which classification of filler metal is best suited for a particular application, with due consideration to the particular requirements for that application.

A1.2 Classification System

A1.2.1 The system for identifying welding rod and electrode classifications used in this specification follows the standard pattern used in other AWS filler metal specifications. The letter E at the beginning of each classification indicates an electrode, and the letter R indicates a welding rod.

A1.2.2 For the high-speed steels, austenitic manganese steels, and austenitic high chromium irons, the letters immediately after the E or R are the chemical symbols for the principal elements in the classification. Thus FeMn is an iron-manganese steel, and FeCr is an iron-chromium alloy, etc. Where more than one classification is included in a basic group, the individual classifications in the group are identified by the letters A, B, etc., as in EFeMn-A. Further subdividing is done by using a 1, 2, etc., after the last letter.

A1.2.3 For the tungsten-carbide classifications, the WC immediately after the E or R indicates that the filler metal consists of a mild steel tube filled with granules of fused tungsten-carbide. The numbers following the WC indicate the mesh size limits for the tungsten-carbide granules. The number preceding the slash indicates the sieve size for the "pass" screen, and that following the slash indicates the sieve size for the "hold" screen. Where only one sieve size is shown, this indicates the size of the screen through which the granules must pass.

A1.2.4 This specification classifies composite surfacing filler metals. Surfacing welding rods and electrodes made from wrought core wire are covered by AWS A5.13, Specification for Solid Surfacing Welding Rods and Electrodes. A description of available surfacing filler metals is contained in the Appendix to that specification.

A1.3 Ventilation During Welding

A1.3.1 Three major factors in arc welding that govern the amount of contamination to which welders or welding operators may be exposed are:

A1.3.1.1 Dimensions of space in which welding is to be done (with special regard to height of ceiling)

A1.3.1.2 Number of welders or welding operators working in that space

A1.3.1.3 Possible evolution of hazardous fumes, gases, or dusts according to the metals and shielding gases involved

A1.3.2 American National Standard Z49.1, Safety in Welding and Cutting, discusses the ventilation that is required during welding and should be referred to for details. Attention is particularly drawn to Section 8, Health Protection and Ventilation.

A2. RFe5 and EFe5 High-Speed Steel Filler Metals

A2.1 Introduction and Applications. The RFe5 welding rods and EFe5 electrodes have proved very popular for applications where hardness is required at service temperatures up to 1100° F (595° C), and where good wear resistance and toughness are also required. These filler metals are essentially high-speed steels, modified slightly for welding applications.

The three classifications are approximately interchangeable, except that Fe5-A and Fe5-B (with high

carbon) are more suitable for cutting and machining (edge-holding) applications; EFe5-C (with lower carbon) is most suitable for hot working and for applications requiring toughness. Some typical surfacing applications are cutting tools, shear blades, reamers, forming dies, shearing dies, guides, ingot tongs, broaches, and other similar tools.

A2.2 Hardness. The Rockwell hardness of the undiluted Fe5 filler metals in the as-welded condition is in the range of C 55 to C 60. Where a machining operation is required, hardness may be reduced to approximately C 30 by an annealing treatment.

A2.3 Hot Hardness. Hardness at elevated temperatures (hot hardness) is a very important property of weld deposits of these filler metals. Tungsten and molybdenum are probably the most influential elements present in obtaining this property. Due to the large size of these atoms and their low diffusion rates, the carbides do not coalesce, but stay in very small particles. At temperatures up to 1,100° F (595° C), the as-deposited Rockwell hardness of C 60 falls off very slowly to approximately C 47 (448 Brinell). At higher temperatures, it falls off more rapidly. At about 1,200° F (650° C), the maximum Rockwell hardness is about C 30 (233 Brinell).

A2.4 Impact. The Fe5 filler metals as-deposited can withstand only medium impact without cracking. After tempering, the impact resistance is increased appreciably.

A2.5 Oxidation Resistance. Deposits of the Fe5 filler metals, because of the high molybdenum content, will oxidize readily. When heat treatments are required, a non-oxidizing furnace atmosphere, salt bath, or borax coating should be used to prevent decarburization.

A2.6 Corrosion Resistance. The Fe5 weld metal can withstand atmospheric corrosion but is not effective in providing resistance to liquid corrosion.

A2.7 Abrasion. The high-stress abrasion resistance of these filler metals, as-deposited, at room temperature is much better than that of low carbon steel, but they are not considered high abrasion resistance alloys. Resistance to deformation at elevated temperatures up to 1,100° F (595° C) is their outstanding feature, and this may aid hot abrasion resistance.

A2.8 Metal-to-Metal Wear and Mechanical Properties in Compression. Deposits of Fe5 filler metals are well suited for metal-to-metal wear, especially at elevated temperatures. They have a low coefficient of friction and the ability to take a high polish and retain their hardness at elevated temperatures. The compressive strength is very good and will fall or rise with the tempering temperature used.

A2.9 Machinability. These filler metals, after deposition, often have to be annealed for machining operations. For machinability, when thoroughly annealed, they are rated at 65 as compared to a 1 percent carbon tool steel, which has a rating of 100. Full hardness can be regained by heat-treating procedures discussed herein.

A2.10 Identification. The Fe5 filler metals, in the hardened or as-deposited condition, are highly magnetic. When spark tested, they give off a very small, thin stream of sparks approximately 60 in. (1 500 mm) long. Close to the grinding wheel, the spark is red; at the end, it is a straw color.

A2.11 Metallography. The Fe5 filler metals, when deposited, contain highly alloyed tetragonal martensite, highly alloyed retained austenite, and undissolved complex carbides. Molybdenum has been used to replace tungsten found in many other high-speed tool steels such as the 18-4-1 grade (18 percent tungsten, 4 percent chromium, and 1 percent vanadium). Molybdenum forms the same type of complex double carbide with iron and carbon as does tungsten. Since molybdenum is an element of smaller atomic weight than tungsten (approximately one-half), it will produce twice as many atoms of alloying elements in the steel as will tungsten when added in the same weight percentage. This appears to be a partial reason for the fact that 1 percent molybdenum can be substituted for approximately 2 percent tungsten.

The carbon content of high-speed steel is usually fixed within narrow limits. Carbon as low as 0.5 percent will not permit maximum hardness because of the presence of appreciable amounts of ferrite. As the carbon increases, the quenched hardness increases because of the absence of ferrite and because of the increased amount of carbon dissolved in the austenite. Chromium is present in this deposit at 3.0 to 5.0 percent, as this appears to be the right percentage for the best compromise between hardness and toughness. In conjunction with the carbon content, chromium is mainly responsible for the great hardenability of this deposit.

A2.12 Heat Treatment. A summary of the heat-treating data is outlined as follows:

Preheat: Preheat is usually used, although in some instances no preheating is required. When a preheat is used, the minimum is 300° F (150° C).

Annealing: 1,550 to 1,650° F (845 to 900° C). This treatment is applicable only when dictated by machining requirements.

Hardening: Necessary only if part has been annealed for machining.

Preheat — 1300 to 1500° F (705 to 815° C).

Harden — 2200 to 2250° F (1200 to 1230° C), air or oil quench.

Double Temper — 1025° F (550° C), 2 hr., air cool to room temperature; 1025° F (550° C), 2hr., air cool to room temperature.

Due to the high molybdenum content of these filler metals, weld deposits are susceptible to decarburization at high temperature; consequently, in heat treatment and annealing, care must be used to prevent decarburization.

A2.13 Welding Characteristics. The procedure for applying Fe5 filler metals is similar to that employed for other surfacing materials. The work must be carefully cleaned of all foreign material prior to welding. All cracked or spalled metal should be removed to ensure sound fusion of weld and base metals. Definite welding instructions depend upon the specific job and welding process to be employed. Preheating, although generally recommended, is not used in all surfacing applications but is dependent upon the shape, size, and composition of the part to be surfaced. Peening of each bead after deposition is sometimes employed to reduce stresses in the weldment.

A3. EFeMn Austenitic Manganese Steel Electrodes

A3.1 Introduction and Applications. The two classifications of EFeMn electrodes are substantially equivalent, except that the yield strength of EFeMn-B weld deposits is higher than that of EFeMn-A. For track work, the higher yield is considered an asset.

For surfacing with EFeMn electrodes, most appropriate applications are those dealing with metal-to-metal wear and impact, where the work-hardening quality of the deposit becomes a major asset. Soft rock crushing operations involving limestone or dolomite, for example, can also benefit from such protection. Abrasion by angular quartz particles does not seem to be altered in laboratory tests by work-hardening manganese steel. Severe service with quartz abrasion is best dealt with by using manganese steel as a tough base metal, and surfacing with a martensitic iron. Under very high stress conditions, like those in a jaw crusher, experience may demonstrate that all wear resistant metals except manganese steel are too brittle. Surface protection then becomes a matter of replacing worn metal with more EFeMn filler metal, which is common. Railway frogs and crossings are also reclaimed in this way. Extensive areas, as in crushers and power shovel parts, are usually protected with a combination of weld deposits and filler bars, which are flats and rounds of manganese steel, welded in place. Such protection may be applied up to perhaps 3 in. (76 mm) thick, and represents the approximate upper thickness limit of common surface protection methods.

A3.2 Hardness. The normal hardness of these weld deposits is 170 to 230 BHN, but this is misleading since they work-harden very readily to 450 to 550 BHN.

A3.3 Hot Hardness. Reheating above 500 to 600° F (260 to 315° C) may cause serious embrittlement. Thus, hot hardness is not a property that can be exploited.

A3.4 Impact. The EFeMn electrodes, as-deposited, are usually considered the outstanding engineering materials for heavy impact service.

A3.5 Oxidation Resistance and Corrosion Resistance. The EFeMn weld metal is similar to ordinary carbon steels in this respect and is not oxidation or corrosion resistant.

A3.6 Abrasion. Abrasion resistance to high- and low-stress abrasion is moderate against hard abrasives like quartz.

Wet Quartz Sand Abrasion Factor: 0.75 to 0.85 (compared to SAE 1020 Steel as 1.00).

Dry Quartz Sand Erosion Factor: 0.41 to 0.56 (compared to SAE 1020 Steel as 1.00).

The assumption that abrasion resistance increases with hardness has not been confirmed with carefully controlled testing using quartz as an abrasive.

A3.7 Metal-to-Metal Wear and Mechanical Properties in Compression. Metal-to-metal wear resistance is frequently excellent. The yield strength in compression is low, but any compressive deformation rapidly raises it until plastic flow ceases. This behavior is an asset in battering, pounding, and bumping wear situations.

A3.8 Machinability. Machining is very difficult with ordinary tools and equipment; finished surfaces are usually ground.

A3.9 Identification. Because of the unusual response to heating of the EFeMn weld metal, correct identification before welding is very important. A small magnet and a grinding wheel usually suffice, since a clean ground surface is substantially nonmagnetic, and grinding sparks are plentiful in contrast to the nonmagnetic stainless steels.

A3.10 Metallography. The chief constituent of EFeMn weld deposits is austenite, the nonmagnetic form of iron that can hold considerable carbon in solid solution. Austenite that is nearly saturated with carbon is responsible for the properties of these filler metals.

The austenite is not entirely stable. It will reject some of the carbon at intermediate temperatures or during deformation. This takes the form of manganese-iron carbides as fine particles, as films at grain boundaries, as flat, brittle plates, and in pearlite. Carbide precipitation in any of these forms leads to increased hardness and brittleness. Deformation (work-hardening from pounding, etc.) raises hardness most effectively with the least loss in toughness. Carbide precipitation, caused by slow cooling from the completely austenitic range or by reheating the tough structure, is undesirable.

The normal tough structure of manganese steel is produced in manufacture by water quenching from above 1800° F (980° C). Weld deposits depend on modified compositions to approximate this toughness after air cooling from the welding temperature.

A3.11 EFeMn-A (Nickel-Manganese). Nickel additions to the standard grade of manganese steel produce no apparent changes in yield strength, but there is a distinct trend toward higher elongation. The quenching rate is perhaps less critical, but quenching is still necessary to obtain the maximum toughness. A lower carbon content is much more effective in conferring toughness without quenching. As added nickel seems to prevent the lower intrinsic toughness of the straight 12 percent Mn steels with low carbon, an alloy of 0.50 to 0.90 percent carbon and about 3 to 5 percent nickel has become popular for welding electrodes. This alloy exhibits greater resistance to embrittlement from reheating up to 800° F (425° C) than the standard grade.[4]

A3.12 EFeMn-B (Molybdenum-Manganese). The addition of molybdenum to manganese steel tends to raise its yield strength. Like nickel, it increases the toughness of the lower carbon types, and can be used interchangeably to produce a satisfactory welding electrode. Either approximately 3 to 5 percent nickel, or ½ to 1-½ percent molybdenum will stabilize the tensile strength of the low carbon type near the standard level of 120,000 psi (827 MPa) after heat treatment. The associated elongation with ½ to 1-½ percent molybdenum is not so high, but it has a compensating higher yield strength. Deposits of EFeMn-B electrodes have given satisfactory performance in such exacting applications as railway switches and frogs, where battered down castings are rebuilt with molybdenum-manganese weld deposits.

A3.13 Heat Treatment. Weld deposits are usually not heat-treated, since the filler metals are formulated to be "air-toughening." However, it sometimes may be advisable to heat-treat a weldment to restore the toughness of a manganese base embrittled by too much reheating. Water quenching after 2 hr. at 1850° F (1010° C) is usually sufficient for this purpose. The weld deposit should be free of cracks if this is done; otherwise, oxidation of the cracks may cause considerable structural damage and cancel the benefits of the toughening heat treatment.

A3.14 Welding Characteristics

A3.14.1 If EFeMn filler metal is deposited on carbon or low alloy steel, the transition zone may be too low in manganese and thus, develop a martensitic structure, which can permit spalling of the weld deposit because of brittleness. Such use of an austenitic manganese steel overlay for abrasion resistance is generally not recommended, since an air-hardening steel or martensitic iron is usually more satisfactory.

A3.14.2 Manganese steel is so popular for battering metal-to-metal wear that it has seen considerable service as an overlay on carbon steels despite its tendency to develop martensite. For many years, it has been used as overlays on large steel mill coupling boxes, pinions, spindles, and other items working under heavy impact load. Cracking has been observed, but since the contacting faces are enclosed, highly stressed edges are avoided, and, perhaps because large surface areas are in contact, the surface protection technique has been considered satisfactory. Four layers of the manganese steel overlay were recommended.

A3.14.3 Not all users of this procedure may be so fortunate in avoiding trouble from the brittle fusion zone. One way to avoid cracking is to "butter" the carbon steel with a layer of austenitic stainless steel. This blends well with carbon or low alloy steels and manganese steel without forming brittle structures. The EFeMn filler metal may then be welded on top of the stainless steel deposit without sacrificing the toughness of austenite.

A3.14.4 Bare EFeMn electrodes are frequently used. Acceptable welds can be produced with sufficient power, and the high melting rates are considered an asset. Covered electrodes permit the use of lower power, are easier for an inexperienced welder to use, and minimize annoying short circuits in restricted space,

[4] Specification for Austenitic Manganese-Steel Castings (ASTM Designation: A 128)

but generally have a lower melting rate. Direct-current, reverse polarity is preferred for both covered and bare electrodes.

A3.14.5 While manganese steel has high ductility when strained in one direction, the two- and three-dimensional stresses that occur in weld deposits can, and frequently do, cause failure with no apparent ductility. The undesirable weld bead tensile stresses that develop on cooling can be changed to compressive stress by peening the deposit. Such peening, preferably with a pneumatic hammer, flows the outer surface, and the deformation relieves the tension that would otherwise cause cracks. The peening, for which a machinist's ball peen hammer is suitable, should be done promptly after deposition of one or even half an electrode. In no case should a bead longer than 9 in. (230 mm) be left without immediate peening.

A3.14.6 The weld metal is weakest while hot. Since it is easiest to deform at red or yellow heats, and since cracking is most likely to occur above 1500° F (815° C), it is advisable to peen the bead as quickly as practicable.

A3.14.7 There is experimental evidence that arc power, arc length, bead size, and melting rate are related to bead cracking. Unless the beads can be quickly and properly peened, arc power above 3.5 kw or melting rates above 12 in./mm (5.1 mm/s) should be avoided. In any case, a weaving bead that has a cross-sectional area greater than 0.18 in^2 (116 mm^2) (for example, 0.8 in. [20 mm] wide by 0.2 in. [5.1 mm] high above the base: which may mean about 0.40 in. [10 mm] thick) is desirable. These conditions may not prevent underbead cracking, but they should minimize fissuring in the weld.

A3.14.8 Much use of surfacing with EFeMn electrodes is to build up worn manganese steel parts. To avoid embrittling this base metal, it should be kept below 500° F, (260° C) within 2 in. (51 mm) from the weld by water cooling, intermittent welding, or other procedures.

A4. RFeCr-Al and EFeCr-Al Austenitic High Chromium Iron Filler Metals

A4.1 Introduction and Applications. The RFeCr-Al welding rods and EFeCr-Al electrodes have proved very popular for facing agricultural machinery parts. Arc welding is used on heavy materials and large areas; oxyfuel welding is used for thin sections. Plowshares can be considered as a typical application because these filler metals flow well enough to produce a thin edge deposit, and the wear conditions in sandy soil are typically those of erosion or low-stress scratching abrasion. It is significant that the FeCr-Al filler metals become unsuitable in very rocky soil because of the associated impact. Industrial applications include coke chutes, steel mill guides, sandblasting equipment, brick making machinery, etc.

A4.2 Hardness. The as-welded hardness when deposited by oxyfuel welding will vary with carbon content. The average Rockwell hardness of 104 production quality control tests was C 56.1 with an observed range of C 51 to C 62, representing a range of 4.3 to 5.2 percent carbon. Macrohardness values, such as Rockwell or Brinell numbers, will increase slowly as carbon increases. Such figures reflect the greater proportion of the hard carbides in the softer matrix but do not reliably indicate abrasion resistance.

Since dilution is not expected in normal oxyfuel welding, the chief variable is carbon pickup from the flame adjustment. With a 3x feather-to-cone reducing flame, a pickup of 0.4 percent carbon has been observed if the welding rod is on the low side of the carbon range. On the high side of the carbon range, a neutral flame can slightly decarburize the deposit.

The austenitic matrix can work-harden somewhat under impact, but since the consequent deformation leads to cracking, impact service is avoided.

A4.3 Hot Hardness. Hardness falls slowly with increasing temperatures up to about 800 to 900° F (425 to 480° C). and thereafter falls rapidly and also becomes strongly affected by creep. At 900* F (480° C), the instantaneous Rockwell hardness is about C 43, and 3 minutes under load will cause an apparent drop to near C 37. At 1200° F (650° C), the instantaneous value may be no higher than C 5, and the apparent loss due to creep in 3 minutes may be as much as 45 points on the "C" scale. However, the loss of hardness due to tempering is negligible in comparison with many martensitic alloys, and the drop in hardness shown by hot testing is practically recovered on cooling to ordinary temperatures.

Very little is known about its resistance to thermal shock and thermal fatigue.

A4.4 Impact. FrCr-Al deposits may withstand very light impact without cracking, but cracks will form readily if blows produce plastic deformation. These filler metals are seldom used under conditions of medium impact and are generally considered unsuitable for heavy impact where cracking is objectionable. Dynamic compression stresses above 60,000 psi (413 MPa) should be avoided.

A4.5 Oxidation Resistance. The high chromium content of these filler metals confers excellent oxidation resistance up to 1800° F (980° C), and they can be considered for hot wear applications where their hot plasticity is not objectionable.

A4.6 Corrosion Resistance. The matrix chromium content of the deposited FeCr-Al filler metals is comparatively low and is thus not very effective in providing resistance to liquid corrosion. These deposits will rust in moist air and are not stainless, but are more stable than ordinary iron and steel.

A4.7 Abrasion. Resistance to low-stress scratching abrasion is outstanding and is related to the volume of the hard carbides. Deposits of FeCr-Al will wear about one eighteenth as much as soft (SAE 1020) steel against rounded quartz sand grains and against sharp angular flint fragments. As stress on abrasion increases, their performance declines. As deposited, the resistance of FeCr-Al is only mediocre under high-stress grinding abrasion, and its use is usually not advantageous for such service.

A4.8 Metal-to-Metal Wear. Low-stress abrasion produces a good polish with a resulting low coefficient of friction. Where the polish is produced by metal-to-metal wear, performance is also good. Resistance to galling is considered better than for ordinary hardened steel because tempering from frictional heat is negligible. Austenite alone is prone to gall, and its presence may lead to unfavorable performance. Also, the hard carbides can stand in relief through wear of the austenite and cut or cause excessive wear of a mating surface. Therefore, metal-to-metal service should be approached cautiously. Rolling mill guides have been found to be appropriate applications.

A4.9 Mechanical Properties in Compression. In compression, the deposited FeCr-Al filler metals are expected to have a yield strength (0.1 percent offset) of between 80,000 to 140,000 psi (551 to 965 MPa), with an ultimate strength from 150,000 to 280,000 psi (1034 to 1930 MPa). They will show about 1 percent elastic deformation and tolerate from 0.5 to 3 percent additional plastic deformation before failure at the ultimate. Like other cast iron types, their tensile strength is low, and tension should be avoided in designs for their use.

A4.10 Machinability. The FeCr-Al deposits are considered commercially unmachinable with cutting tools. and are also very difficult to grind. For machine shop use, the recommended grinding wheels are aluminum oxide abrasive with a 24-grit size, hard (Q) and medium spaced resinoid bond for off-hand high-speed work, and a slightly softer (P) vitrified bond for off-hand low-speed use.

A4.11 Metallography. Deposits of these filler metals consist of hard carbides of the chromium carbide (Cr_7C_3) type dispersed in a matrix of austenite that is stable during slow cooling. The FeCr-Al classification does not apply to those high chromium irons that are subject to pearlite formation, martensitic hardening, and other manifestations of austenite transformation.

The Cr_7C_3 carbides have a diamond pyramid hardness (DPH) or Vickers pyramid number (VPN) of approximately 200, are harder than quartz, and thus confer resistance to scratching abrasion by most common materials. The austenite matrix is softer (about 450 DPH) and somewhat plastic. It can be eroded from around the carbides and may not give them competent support under conditions of high-stress abrasion. The austenite is rich in dissolved carbon as welded. Much of it separates out as spine-like crystals of Cr_7C_3 during cooling, some crystallizes as smaller particles, and some remains in solid solution. The hard carbides are brittle and fracture readily.

A4.12 Heat Treatment. The austenite, which is stabilized partly by dissolved chromium and partly by manganese, does not transform by usual steel hardening reactions. It can precipitate some carbon in dispersed form during aging heat treatments, but this hardening is minor and is neglected in practical surfacing operations.

A4.13 Welding Characteristics. In oxyfuel gas welding, flat position welding with a 3x feather-to-cone reducing flame is recommended. The coefficient of thermal expansion is about 50 percent greater than that of carbon steels and irons. Contraction stresses are prone to crack the deposit, and, while these cracks may do no harm, they may be minimized by preheating and postheating techniques. The use of a flux may be helpful in dealing with dirt, scale, and other undesirable surface contamination, but on a clear, bright metal surface such as grinding produces, flux is ordinarily unnecessary. A good bond can be produced on all iron-base materials, provided the base metal is not damaged by the high temperature conditions of welding and weld cooling. In arc welding, the procedure for applying FeCr-Al filler metals is similar to that used for other surfacing electrodes.

A5. Tungsten-Carbide Welding Rods and Electrodes

A5.1 Introduction and Applications

A5.1.1 These welding rods and electrodes are usually sold as steel tubes containing 60 percent carbide granules by weight (designated 60:40), but lower tungsten carbide percentages are available for certain applications. The carbide is a mixture of WC and W_2C tungsten-carbides that is produced by melting, solidifying, crushing, and sizing the carbide with screens. The size of the carbide granules has an important influence on weld deposit properties and is appropriately included by the various grades in the specification. The shape of the carbide granules is also important. Granules approaching cubes or spheres are desired.

A5.1.2 The requirements for tungsten-carbide granules given in the specification may be applied to tungsten-carbide purchased in bulk. Some users apply the loose granules by welding, and others prefer to make their own welding rods by filling tubes.

A5.1.3 Though crushed sintered tungsten-carbide bonded with cobalt or other constituents has been used in similar welding rods, it is not covered by the specification because it is usually considered inferior for the purpose. Cobalt may also be melted with tungsten-carbide and the product cast into small inserts or slugs. These are welded into place to provide localized abrasion resistance, but such carbide inserts for this useful technique are not covered by this specification. A quick field inspection for tungsten-carbide particles to determine if the carbide is alloyed with other constituents is to empty a tube and pass a small magnet over the carbide granules. Tungsten-carbide that contains an appreciable amount of iron, cobalt, or nickel will be attracted to the magnet. An excess of magnetic material will indicate the need for a chemical analysis check.

A5.1.4 The tungsten-carbide welding rods and electrodes are used to make overlays whose abrasion resistance currently surpasses that of any other available hardfacing material. They are typically used to armor the cutting teeth and gage holding surfaces of rock drill bits; the wearing surfaces of mining, quarrying, digging, and earth moving equipment; and a multitude of parts where the roughness of the weld deposit (as it wears) is not a handicap, but where the high abrasion resistance is needed.

A5.1.5 The deposits do not consist of hard carbides in a soft steel matrix as might be supposed. When the sheath of carbon steel melts during welding, it dissolves enough of both tungsten and carbon to form a hard matrix that is a competent support for the hard granules that it anchors in place. This matrix has characteristics that range from those of air-hardening tungsten steel to cast-iron structures containing considerable secondary tungsten-iron carbides.

A5.1.6 Surface roughness of abraded deposits depends upon initial granule size and welding procedures. Abrasion resistance depends largely upon the volume of undissolved carbides and is generally better for oxyfuel gas welds.

A5.2 Hardness. The hardness of good quality cast tungsten-carbide is:

Vickers pyramid number	About 2400
Rockwell "A"	9 to 95
Knoop K_{100}	1500
Scratch (Mohs scale about the same as silcon carbide)	9.4

The microhardness of the 6.1 percent C tungsten-carbide crystals WC in the cast carbide is Knoop (K_{100}) 1880. The hardness of the bonding metal will vary from RC30 for a deposit of 10 mesh particles (40-60) in a carbon steel tube, to RC60 for 100 mesh particles deposited with a carburizing flame from a carbon steel tube.

A5.3 Hot Hardness. Tungsten confers hot hardness, and the matrix of these composite weld deposits retains its hardness up to 1000° F (540° C), considerably better than ordinary hardened steels (see Fig. A1).

The higher temperatures of arc welding permit more tungsten-carbide solution during arc welding; and such welds, therefore, exhibit better hot hardness than oxyfuel gas welds. The pattern of hardness versus temperature is shown in Fig. A2.

A5.4 Impact. Both the carbide granules and the weld deposits are relatively brittle and vulnerable to sudden tensile stresses. However, they have high compressive strength and can withstand light impacts that do not produce compression stress above the yield strength, which may reach 200 ksi (1379 MPa) for the matrix. Impact blows faster than 50 ft/in (15.2 ft/in) should be avoided, and the design should avoid tensile stress.

A5.5 Oxidation Resistance. Tungsten-carbide has a low resistance to oxidation. Exposed granules of tungsten-carbide will oxidize to form voluminous yellow tungstic oxide at temperatures above 1000° F (540° C).

A5.6 Corrosion Resistance. Though the granules may be resistant to many media, the matrix of the standardized tube welding rod deposits is practically as vulnerable to rusting and corrosion as ordinary steel.

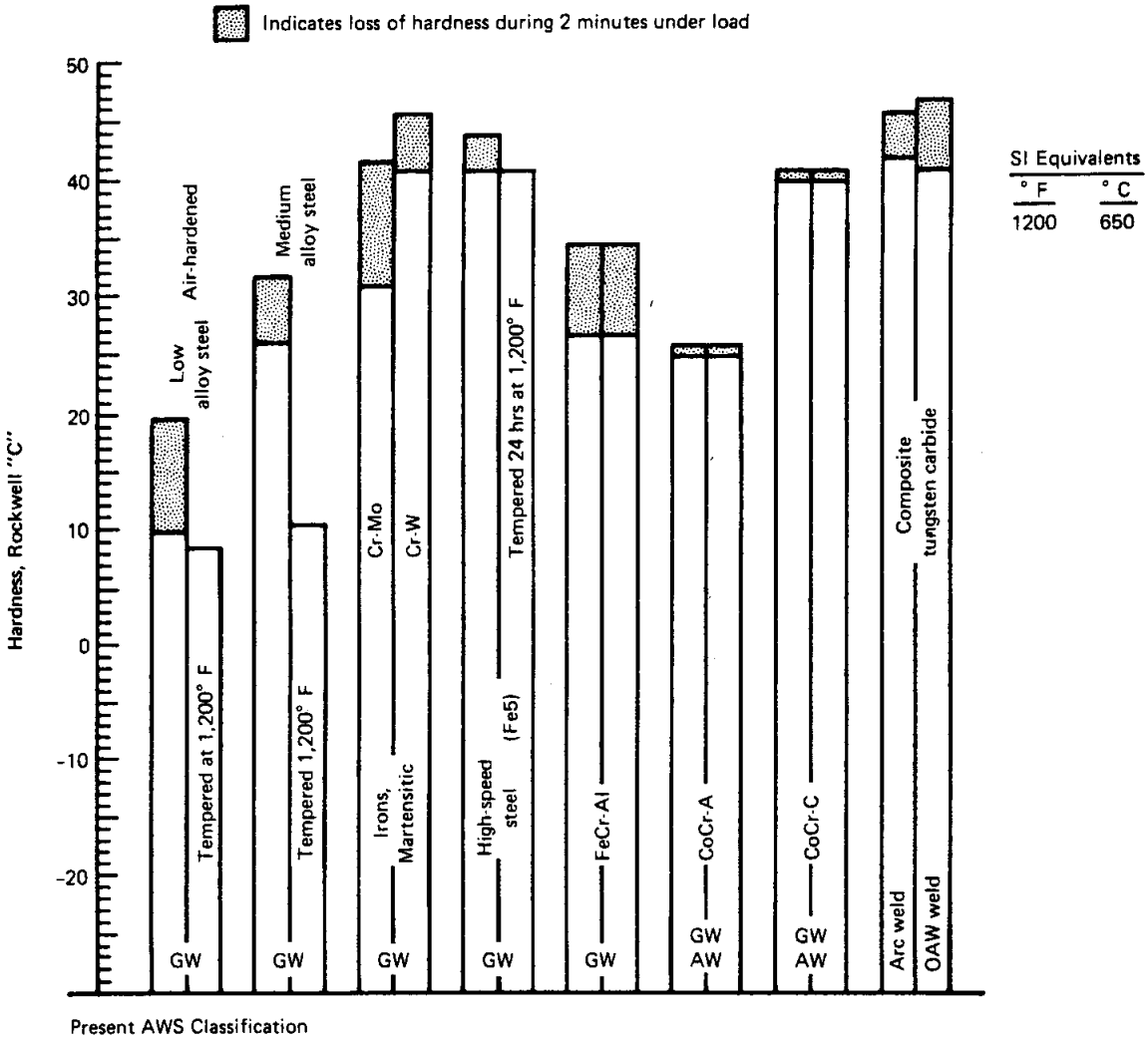

Note 1: GW = oxyacetylene weld
AW = shielded metal arc weld
Note 2: Values below 20 HRC included for illustrative purposes.

FIG. A1 APPARENT HOT HARDNESS OF HARD SURFACING ALLOYS AT 1000°F (540°C)

The materials covered by this specification should not be selected if corrosion resistance is required. If their great abrasion resistance impels the risk of application in a corrosive environment, a preliminary service test should be made to establish practicability.

A5.7 Abrasion Resistance. Composite weld deposits made from these materials are appropriate for resisting low-stress scratching or high-stress grinding abrasion. In either type, the matrix tends to abrade more rapidly, permitting the carbides to stand in relief. As long as matrix erosion does not undermine the carbide granules, this is of little concern unless the resultant roughness is objectionable. This selective action may cause more rapid weight loss in the early stage of a given use, but the wear rate then tends to decrease and stabilize. These stages may not be apparent in a field application, but they can be demonstrated in a laboratory test. This same test shows that arc welds have behavior related to granule size and welding current, while oxyfuel gas welds are usually higher in abrasion resistance and are more consistent.

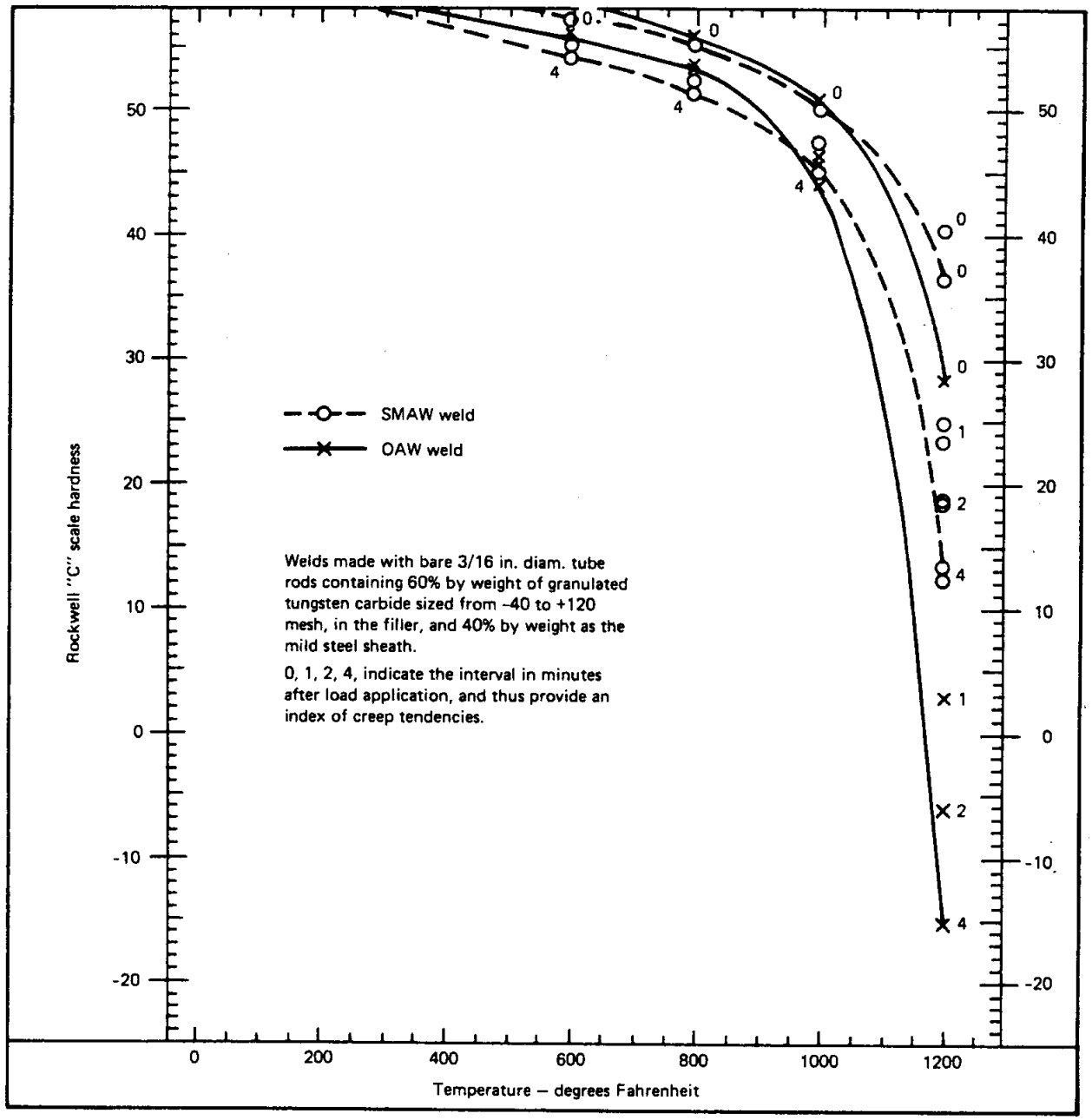

Note: Values below 20 HRC included for illustrative purposes.

FIG. A2 HOT HARDNESS OF COMPOSITE TUNGSTEN-CARBIDE WELD DEPOSITS, EFFECT OF TEMPERATURE ON APPARENT HOT HARDNESS

The effect of these variables is shown in the high-stress grinding results in Fig. A3.

The extreme is attained if high current arc welding is used with electrodes containing very fine granules, whereby all of the tungsten-carbide may be dissolved to form tungsten steel, and the resulting behavior is that of an air-hardening steel only.

A5.8 Metal-to-Metal Wear. Tungsten-carbide deposits are not applicable for conditions of metal-to-metal wear because the wear is chiefly in the matrix, and the carbide left in relief produces a rough surface.

A5.9 Mechanical Properties in Compression. Deposits can be made by using high-strength bonding alloys to give a deposit with high compressive strength; but the usual carbon steel binders give deposits that have a compressive strength about the same as a high carbon steel deposit.

A5.10 Machinability. Tungsten-carbide deposits are considered commercially unmachinable. The deposits are finished when required using silicon-carbide or diamond grinding wheels.

A5.11 Identification. Tungsten-carbide particles have the following properties that may be used for identification.

(1) Nonmagnetic

(2) High density (over 16 specific gravity)

(3) Insoluble in most acids

(4) Readily forms a yellow oxide when heated red hot in air

(5) High melting point; practically impossible to melt in oxyacetylene flame

(6) Very hard and quite brittle

A5.12 Heat Treatment. The properties of tungsten-carbide are not changed by heat treatment. However, the metal holding the particles of tungsten carbide in the surfacing layer may or may not respond to heat treatment. The response of the bonding metal depends upon the original analysis of the binder and upon the carbon and tungsten pickup during application.

Carburizing and hardening may be used to harden the bonding metal.

A5.13 Welding Characteristics

A5.13.1 The bare tubular welding rods used for oxyacetylene welding are made from carbon steel, and the techniques for oxyfuel gas welding carbon steel should be used. Oxidation of the base metal that will interfere with wetting and oxidation of the molten metal that can lead to porosity should be avoided. With adequate skill, excellent oxyacetylene deposits can be obtained. However, mechanical behavior of the melt will differ from that of carbon steel because of the included granules. Some solution of the tungsten-carbide granules during welding is expected, but the undissolved portion is important to the performance of the hard overlay. Granule distribution is influenced by manipulation of the welding torch and of the welding rod. The welder should strive for a uniform final distribution of the granules.

A5.13.2 Electric arc deposition from covered electrodes will involve little difficulty for a skilled welder, but the tungsten-carbide granules must be considered. Arc deposition temperatures are higher than those for oxyfuel gas welding, and there is a greater tendency to dissolve the tungsten-carbide granules. (The influence of this on performance is described under A5.7, Abrasion Resistance.) It is desirable to use the lowest feasible arc power in order to minimize granule solution. Granule distribution is controlled almost entirely by manipulation of the electrode. If the result is segregation of the granules in streaks, the resultant differential wear pattern in service may be undesirable. With arc deposition, the welder should also try to attain uniform granule deposition, which is more difficult than with oxyfuel gas welding.

A5.13.3 The molten steel matrix is expected to readily wet the tungsten-carbide granules and form a strong bond. If this does not occur, the presence of dirt (from the base metal) or excessive oxidation should be suspected.

A5.13.4 The following conditions have been found suitable for arc welding:

Electrode diameter,		Current,	
in.	(mm)	DCRP	AC
1/8	(3.2)	100 to 125	110 to 135
3/16	(4.8)	125 to 150	135 to 160

A5.13.5 The usual overlay is about $\frac{1}{8}$ in. (3.2 mm) thick, though skilled welders can make thinner deposits, and thicker ones are possible by using several layers. In the latter case, tension cracks in the overlay are likely.

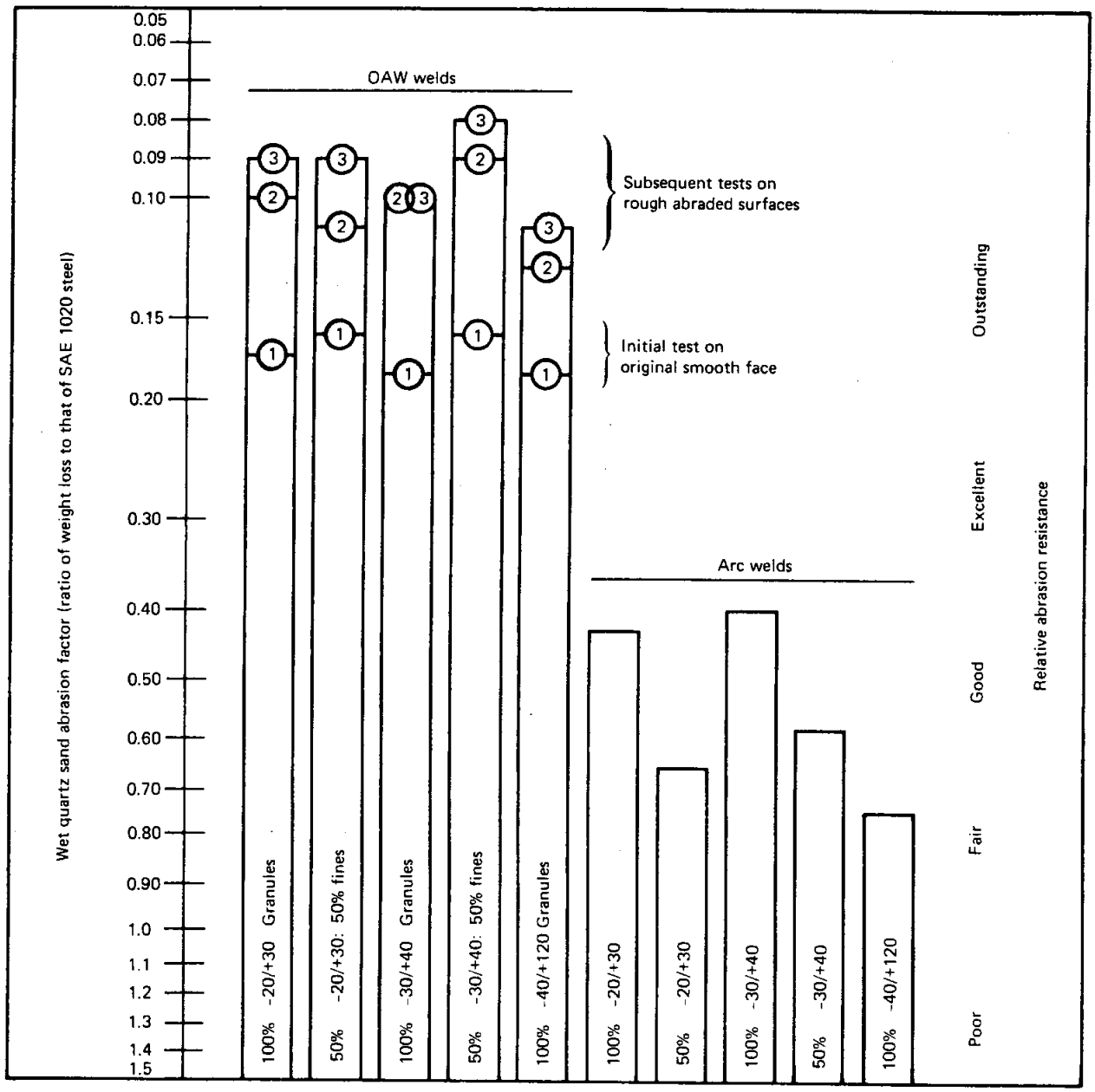

FIG. A3 ABRASION RESISTANCE OF COMPOSITE TUNGSTEN-CARBIDE WELD DEPOSITS AS AFFECTED BY GRANULE SIZE AND WELDING PROCESS

Bibliography

1. *The Welding Encyclopedia*, Seventeenth Edition, 1974.

2. *Welding Handbook*, Seventh Edition, Vol. 2, American Welding Society, *517-562.*

3. *Metal Handbook*, Eighth Edition, Vol. 6, American Society for Metals, *152-166.*

4. Avery, H.S., "Hot Hardness of Hard Facing Alloys," *Welding Journal*, July 1950, *552-578.*

5. "Surface Protection Against Wear and Corrosion," (A Symposium), Chapter 3, American Society for Metals, 1954.

6. Avery, H.S. and Chapin, H.J., "Hard Facing Alloys of the Chromium Carbide Type," *Welding Journal*, October 1952, *917-930.*

7. Avery, H.S., "Selecting Hard Facing Alloys to Resist Impact, Heat, Friction, and Abrasion," *Product Engineering*, March 1952.

8. Daemen, R., "Hard Surfacing, A Summary of Some Basic Principles," *W.I. Surfacing Journal*, Vol. 3, No. 4, October 1972, *4-9.*

9. Farmer, H.N., "Factors Affecting Selection and Performance of Hardfacing Alloys," (A Symposium), Vail, Colorado, July 30-31, 1974, Climax Molybdenum Co., *85-91.*

10. Wold, K.G., "Aluminum Brazes — Another Family of Hardfacing Alloys," *Welding Engineer*, Vol. 59, No. 8, August 1974, *9-11.*

11. Budinski, K.G., "Surfacing I: What a Designer Needs to Know," *Welding Design and Fabrication*, Vol. 49, No. 7, July 1976, *50-53.*

12. Bhansali, K.J. and Silence, W.L., "Metallurgical Factors Affecting Wear Resistance of Metals," *Metal Progress*, Nov. 1977, *38-43.*

13. Redman, J.E. "Hardfacing — Where and How to Use It," *Plant Engineering*, July 10, 1975, *95-97.*

14. Avery, H.S., "Some Characteristics of Composite Tungsten Carbide Weld Deposits," *Welding Journal*, February 1951, *144-160.*

15. Avery H.S., "Tungsten Carbide Hard Facing," *Tooling and Production*, May 1953, *49-51.*

SPECIFICATION FOR STAINLESS STEEL ELECTRODES FOR FLUX CORED ARC WELDING AND STAINLESS STEEL FLUX CORED RODS FOR GAS TUNGSTEN ARC WELDING

SFA-5.22

(Identical with AWS Specification A5.22-95)

1. Scope

1.1 This specification prescribes requirements for the classification of stainless steel electrodes for flux cored arc welding and flux cored rods for root pass welding with the gas tungsten arc process.[1] It includes only those products whose cores contain nonmetallic ingredients comprising at least 5 wt.% of the electrode or rod.[2]

1.2 The chromium content of undiluted weld metal from these electrodes and rods is not less than 10.5%[3] nominal and the iron content exceeds that of any other element. For purposes of classification, the iron content shall be derived as the balance element when all other elements are considered to be set at their specified minimum values.

PART A — GENERAL REQUIREMENTS

2. Classification

2.1 The welding electrodes and rods covered by this specification are classified according to the chemical composition of the undiluted weld metal, as specified in Table 1, the position of welding, the shielding medium, and type of welding current with which they are used, as specified in Table 2.

2.2 Electrodes and rods classified under one classification may be classified under any other classification of this specification provided they meet all the requirements for those classifications. Table 3 lists a number of examples of such dual classification.

3. Acceptance

Acceptance[4] of the material shall be in accordance with the provisions of ANSI/AWS A5.01, *Filler Metal Procurement Guidelines.*

4. Certification

By affixing the AWS specification[5] and classification designations to the packaging, or the classification to the product, the manufacturer certifies that the product meets the requirements of this specification.

[1] In ANSI/AWS A5.22-80, stainless steel classifications for 98% Argon - 2% Oxygen gas shielding existed (EXXXT-2). The combination of a slag covering and this shielding gas has been found to be inappropriate for flux cored arc welding and the EXXXT-2 Classifications have therefore been deleted from A5.22-95.

[2] Stainless steel products with less than 5% wt. non-metallic content are properly classified as metal cored electrodes or rods according to ANSI/AWS A5.9, *Specification for Bare Stainless Steel Welding Electrodes and Rods.*

[3] This revision includes the E502T-X and E505T-X classifications. These electrodes (although they may have differing designators) will also be included in the next revision of ANSI/AWS A5.29, *Specification for Low-Alloy Steel Electrodes for Flux Cored Arc Welding.* They will be deleted from this specification (ANSI/AWS A5.22) in the first revision following their incorporation in ANSI/AWS A5.29.

[4] See Section A3, Acceptance (in the Annex), for further information concerning acceptance, testing of material shipped, and ANSI/AWS A5.01, *Filler Metal Procurement Guidelines.*

[5] See Section A4, Certification (in the Annex), for further information concerning acceptance and testing called for to meet this requirement.

TABLE 1
CHEMICAL COMPOSITION REQUIREMENTS FOR UNDILUTED WELD METAL

		Weight Percent[a,b]										
AWS Classification[c]	UNS Number[d]	C	Cr	Ni	Mo	Cb(Nb) + Ta	Mn	Si	P	S	N	Cu
E307TX-X	W30731	0.13	18.0–20.5	9.0–10.5	0.5–1.5	—	3.30–4.75	1.0	0.04	0.03	—	0.5
E308TX-X	W30831	0.08	18.0–21.0	9.0–11.0	0.5	—	0.5–2.5	1.0	0.04	0.03	—	0.5
E308LTX-X	W30835	0.04	18.0–21.0	9.0–11.0	0.5	—	0.5–2.5	1.0	0.04	0.03	—	0.5
E308HTX-X	W30831	0.04–0.08	18.0–21.0	9.0–11.0	0.5	—	0.5–2.5	1.0	0.04	0.03	—	0.5
E308MoTX-X	W30832	0.08	18.0–21.0	9.0–11.0	2.0–3.0	—	0.5–2.5	1.0	0.04	0.03	—	0.5
E308LMoTX-X	W30838	0.04	18.0–21.0	9.0–12.0	2.0–3.0	—	0.5–2.5	1.0	0.04	0.03	—	0.5
E309TX-X	W30931	0.10	22.0–25.0	12.0–14.0	0.5	—	0.5–2.5	1.0	0.04	0.03	—	0.5
E309LCbTX-X	W30932	0.04	22.0–25.0	12.0–14.0	0.5	0.70–1.00	0.5–2.5	1.0	0.04	0.03	—	0.5
E309LTX-X	W30935	0.04	22.0–25.0	12.0–14.0	0.5	—	0.5–2.5	1.0	0.04	0.03	—	0.5
E309MoTX-X	W30939	0.12	21.0–25.0	12.0–16.0	2.0–3.0	—	0.5–2.5	1.0	0.04	0.03	—	0.5
E309LMoTX-X	W30938	0.04	21.0–25.0	12.0–16.0	2.0–3.0	—	0.5–2.5	1.0	0.04	0.03	—	0.5
E309LNiMoTX-X	W30936	0.04	20.5–23.5	15.0–17.0	2.5–3.5	—	0.5–2.5	1.0	0.04	0.03	—	0.5
E310TX-X	W31031	0.20	25.0–28.0	20.0–22.5	0.5	—	1.0–2.5	1.0	0.03	0.03	—	0.5
E312TX-X	W31331	0.15	28.0–32.0	8.0–10.5	0.5	—	0.5–2.5	1.0	0.04	0.03	—	0.5
E316TX-X	W31631	0.08	17.0–20.0	11.0–14.0	2.0–3.0	—	0.5–2.5	1.0	0.04	0.03	—	0.5
E316LTX-X	W31635	0.04	17.0–20.0	11.0–14.0	2.0–3.0	—	0.5–2.5	1.0	0.04	0.03	—	0.5
E317LTX-X	W31735	0.04	18.0–21.0	12.0–14.0	3.0–4.0	—	0.5–2.5	1.0	0.04	0.03	—	0.5
E347TX-X	W34731	0.08	18.0–21.0	9.0–11.0	0.5	8 × C min 1.0 max	0.5–2.5	1.0	0.04	0.03	—	0.5
E409TX-X[e]	W40931	0.10	10.5–13.5	0.60	0.5	—	0.80	1.0	0.04	0.03	—	0.5
E410TX-X	W41031	0.12	11.0–13.5	0.60	0.5	—	1.2	1.0	0.04	0.03	—	0.5
E410NiMoTX-X	W41036	0.06	11.0–12.5	4.0–5.0	0.40–0.70	—	1.0	1.0	0.04	0.03	—	0.5
E410NiTiTX-X[e]	W41038	0.04	11.0–12.0	3.6–4.5	0.5	—	0.70	0.50	0.03	0.03	—	0.5
E430TX-X	W43031	0.10	15.0–18.0	0.60	0.5	—	1.2	1.0	0.04	0.03	—	0.5
E502TX-X[f]	W50231	0.10	4.0–6.0	0.40	0.45–0.65	—	1.2	1.0	0.04	0.03	—	0.5
E505TX-X[f]	W50431	0.10	8.0–10.5	0.40	0.85–1.20	—	1.2	1.0	0.04	0.03	—	0.5
E307T0-3	W30733	0.13	19.5–22.0	9.0–10.5	0.5–1.5	—	3.30–4.75	1.0	0.04	0.03	—	0.5
E308T0-3	W30833	0.08	19.5–22.0	9.0–11.0	0.5	—	0.5–2.5	1.0	0.04	0.03	—	0.5
E308LT0-3	W30837	0.03	19.5–22.0	9.0–11.0	0.5	—	0.5–2.5	1.0	0.04	0.03	—	0.5
E308HT0-3	W30833	0.04–0.08	19.5–22.0	9.0–11.0	0.5	—	0.5–2.5	1.0	0.04	0.03	—	0.5
E308MoT0-3	W30839	0.08	18.0–21.0	9.0–11.0	2.0–3.0	—	0.5–2.5	1.0	0.04	0.03	—	0.5
E308LMoT0-3	W30838	0.03	18.0–21.0	9.0–12.0	2.0–3.0	—	0.5–2.5	1.0	0.04	0.03	—	0.5
E308HMoT0-3	W30830	0.07–0.12	19.0–21.5	9.0–10.7	1.8–2.4	—	1.25–2.25	0.25–0.80	0.04	0.03	—	0.5
E309T0-3	W30933	0.10	23.0–25.5	12.0–14.0	0.5	—	0.5–2.5	1.0	0.04	0.03	—	0.5
E309LT0-3	W30937	0.03	23.0–25.5	12.0–14.0	0.5	—	0.5–2.5	1.0	0.04	0.03	—	0.5
E309LCbT0-3	W30934	0.03	23.0–25.5	12.0–14.0	0.5	0.70–1.00	0.5–2.5	1.0	0.04	0.03	—	0.5
E309MoT0-3	W30939	0.12	21.0–25.0	12.0–16.0	2.0–3.0	—	0.5–2.5	1.0	0.04	0.03	—	0.5
E309LMoT0-3	W30938	0.04	21.0–25.0	12.0–16.0	2.0–3.0	—	0.5–2.5	1.0	0.04	0.03	—	0.5
E310T0-3	W31031	0.20	25.0–28.0	20.0–22.5	0.5	—	1.0–2.5	1.0	0.03	0.03	—	0.5
E312T0-3	W31231	0.15	28.0–32.0	8.0–10.5	0.5	—	0.5–2.5	1.0	0.04	0.03	—	0.5
E316T0-3	W31633	0.08	18.0–20.5	11.0–14.0	2.0–3.0	—	0.5–2.5	1.0	0.04	0.03	—	0.5
E316LT0-3	W31637	0.03	18.0–20.5	11.0–14.0	2.0–3.0	—	0.5–2.5	1.0	0.04	0.03	—	0.5
E316LKT0-3[g]	W31630	0.04	17.0–20.0	11.0–14.0	2.0–3.0	—	0.5–2.5	1.0	0.04	0.03	—	0.5
E317LT0-3	W31737	0.03	18.5–21.0	13.0–15.0	3.0–4.0	—	0.5–2.5	1.0	0.04	0.03	—	0.5
E347T0-3	W34733	0.08	19.0–21.5	9.0–11.0	0.5	8 × C min 1.0 max	0.5–2.5	1.0	0.04	0.03	—	0.5
E409T0-3[e]	W40931	0.10	10.5–13.5	0.60	0.5	—	0.80	1.0	0.04	0.03	—	0.5
E410T0-3	W41031	0.12	11.0–13.5	0.60	0.5	—	1.0	1.0	0.04	0.03	—	0.5
E410NiMoT0-3	W41036	0.06	11.0–12.5	4.0–5.0	0.40–0.70	—	1.0	1.0	0.04	0.03	—	0.5
E410NiTiT0-3[e]	W41038	0.04	11.0–12.0	3.6–4.5	0.5	—	0.70	0.50	0.03	0.03	—	0.5
E430T0-3	W43031	0.10	15.0–18.0	0.60	0.5	—	1.0	1.0	0.04	0.03	—	0.5
E2209T0-X	W39239	0.04	21.0–24.0	7.5–10.0	2.5–4.0	—	0.5–2.0	1.0	0.04	0.03	0.08–0.20	0.5
E2553T0-X	W39533	0.04	24.0–27.0	8.5–10.5	2.9–3.9	—	0.5–1.5	0.75	0.04	0.03	0.10–0.20	1.5–2.5

(continued)

TABLE 1 (CONT'D)
CHEMICAL COMPOSITION REQUIREMENTS FOR UNDILUTED WELD METAL

AWS Classification[c]	UNS Number[d]	Weight Percent[a,b] C	Cr	Ni	Mo	Cb(Nb) + Ta	Mn	Si	P	S	N	Cu
EXXXTX-G[h]						Not Specified						
R308LT1-5	W30835	0.03	18.0–21.0	9.0–11.0	0.5	—	0.5–2.5	1.2	0.04	0.03	—	0.5
R309LT1-5	W30935	0.03	22.0–25.0	12.0–14.0	0.5	—	0.5–2.5	1.2	0.04	0.03	—	0.5
R316LT1-5	W31635	0.03	17.0–20.0	11.0–14.0	2.0–3.0	—	0.5–2.5	1.2	0.04	0.03	—	0.5
R347T1-5	W34731	0.08	18.0–21.0	9.0–11.0	0.5	8 × C min 1.0 max	0.5–2.5	1.2	0.04	0.03	—	0.5

NOTES:
a. The weld metal shall be analyzed for the specific elements in this table. If the presence of other elements is indicated in the course of this work, the amount of those elements shall be determined to ensure that their total (excluding iron) does not exceed 0.50%.
b. Single values shown are maximum.
c. In this table, the "X" following the "T" refers to the position of welding (1 for all-position operation or 0 for flat or horizontal operation) and the "X" following the dash refers to the shielding medium (–1, –4, or –5) as shown in the AWS Classification column in Table 2. For information concerning the "G", see A2.3.7 and 2.3.8 of the annex. In A5.22-80, the position of welding was not included in the classification. Accordingly, electrodes classified herein as either EXXXT0-1 or EXXXT1-1 would both have been classified EXXXT-1 and so forth.
d. ASTM/SAE Unified Number System for Metals and Alloys.
e. Titanium—10 × C min., 1.5% max.
f. See Footnote 3 on Page 1.
g. This alloy is designed for cryogenic applications.
h. See A2.3.7 and A2.3.8.

TABLE 2
REQUIRED SHIELDING MEDIUM, POLARITY, AND WELDING PROCESS

AWS Classification[a,b]	External Shielding Medium[c]	Welding Polarity	Welding Process
EXXXTX-1	CO_2	DCEP	FCAW
EXXXTX-3	none (self-shielded)	DCEP	FCAW
EXXXTX-4	75–80% Argon/remainder CO_2	DCEP	FCAW
RXXXT1-5	100% Argon	DCEN	GTAW
EXXXTX-G	Not Specified[d]	Not Specified[d]	FCAW
RXXXT1-G	Not Specified[d]	Not Specified[d]	GTAW

NOTES:
[a] See 1.1 and its footnote 1 regarding the elimination of the EXXXT-2 classifications that existed in the previous revision of this document.
[b] The letters "XXX" stand for the designation of the chemical composition (see Table 1). The "X" after the "T" designates the position of operation. A "0" indicates flat or horizontal operation; a "1" indicates all position operation.
[c] The requirement for the use of specified external shielding medium shall not be construed to restrict the use of any other medium for which the electrodes are found suitable, for any application other than the classification tests.
[d] See A2.3.7 to A2.3.9 for additional information.

5. Units of Measure and Rounding-Off Procedure

5.1 U.S. customary units are the standard units of measure in this specification. The SI units are given as equivalent values to the U.S. customary units. The standard sizes and dimensions in the two systems are not identical, and for this reason conversion from a standard size or dimension in one system will not always coincide with a standard size or dimension in the other. However, suitable conversions, encompassing standard sizes of both, can be made if appropriate tolerances are applied in each case.

5.2 For the purpose of determining conformance with this specification, an observed or calculated value shall be rounded to the nearest 1000 psi for tensile and yield strength, and to the "nearest unit" in the last

TABLE 3
EXAMPLES OF POTENTIALLY OCCURRING DUAL CLASSIFIED ELECTRODES

Primary Classification	Alternate Classification
E308HTX-1	E308TX-1
E308LTX-1	E308TX-1
E308LT0-3	E308T0-3
E308LTX-1	E308LTX-4
E309LT1-1	E309T0-1

NOTE:
The "X" after the "T" designates the position of operation. A "0" indicates flat or horizontal operation; a "1" indicates all position operation.

TABLE 4
REQUIRED TESTS

	Chemical Analysis	Radiographic Test	Tension Test	Face Bend Test	Root Bend Test	Impact Test	Fillet Weld Test
E2XXXT0-X	Required	Required	Required	NR*	NR*	NR*	NR*
E3XXT0-X	Required	Required	Required	Required	NR*	NR*	NR*
E316LKT0-3	Required	Required	Required	Required	NR*	Required	NR*
E4XXT0-X	Required	Required	Required	NR*	NR*	NR*	NR*
E5XXT0-X	Required	Required	Required	NR*	NR*	NR*	NR*
E2XXXT1-X	Required	Required	Required	NR*	NR*	NR*	Required
E3XXT1-X	Required	Required	Required	Required	NR*	NR*	Required
E4XXT1-X	Required	Required	Required	NR*	NR*	NR*	Required
E5XXT1-X	Required	Required	Required	NR*	NR*	NR*	Required
R3XXT1-5	Required	Required	Required	NR*	Required	NR*	NR*

*Not required (See A2.3.8)

right-hand place of figures used in expressing the limiting value for other quantities in accordance with the rounding-off method given in ASTM E29, *Recommended Practice for Using Significant Digits in Test Data to Determine Conformance with Specifications.*

PART B — TESTS, PROCEDURES, AND REQUIREMENTS

6. Summary of Tests

6.1 The tests required for each classification are specified in Table 4. The purpose of these tests is to determine the chemical composition, the mechanical properties, the usability and the soundness of the weld metal. The base metal for the weld test assemblies, the welding and testing procedures to be employed and the results required are given in Sections 8 through 14.

6.2 Chemical analysis is required from weld metal from each size of electrode and rod. The tests for mechanical properties and soundness are conducted on weld metal from the $^{5}/_{16}$ in. (1.6 mm) size of electrode and rod. In any case in which that size is not manufactured, the size closest to it that is manufactured shall be used for the classification tests. The bend tests are conducted on the largest size manufactured. When required by Table 4, the fillet weld tests shall be conducted on all diameters manufactured.

7. Retest

If the results of any test fail to meet the requirement, that test shall be repeated twice. The results of both retests shall meet the requirement. Specimens for retest may be taken from the original test assembly or a new test assembly. For chemical analysis, retest need be

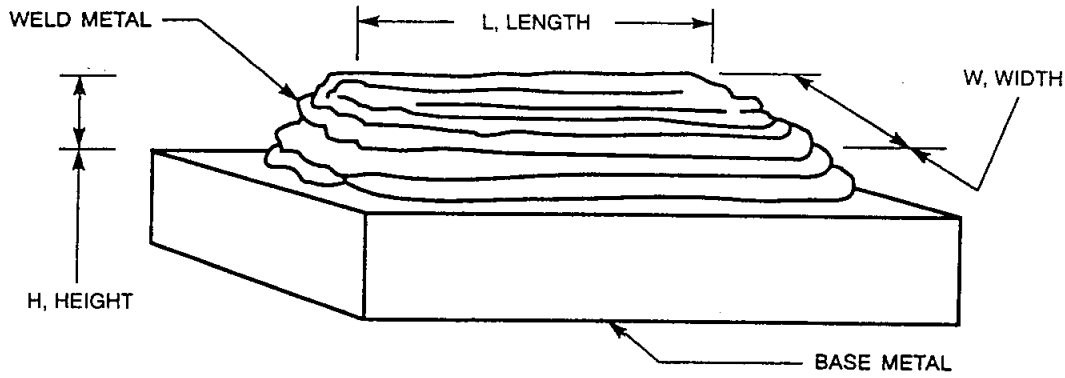

AWS Classification	Diameter		Weld Pad Size, Minimum L		W		H		Minimum Distance of Sample from Surface of Base Plate	
	in.	mm	in.	mm	in.	mm	in.	mm	in.	mm
E3XXTX-X E316LKT0-3 E4XXTX-X E5XXTX-X E2XXXTX-X	0.035 0.045 0.052	0.90 1.2 1.3	3	75	3/4	19	1/2	12.7	3/8	9.5
	1/16 5/64	1.6 2.0	3	75	3/4	19	5/8	16	1/2	12.7
	3/32 7/64	2.4 2.8	3-1/2	88	1	25	3/4	19	5/8	16
R3XXT1-5	5/64 0.087 3/32	2.0 2.2 2.4	3	75	3/4	19	3/8	10	1/4	7.0

Number of passes per layer is optional.

Notes:
a. Width and thickness of the base plate may be any dimensions suitable for the electrode diameter and current use.
b. The first and last inch (25 mm) of the weld length shall be disregarded. The top surface shall be removed and chemical analysis samples shall be taken from the underlying metal of the top layer of the remaining deposited metal.
c. The use of copper chill bars is optional.

FIG. 1 PAD FOR CHEMICAL ANALYSIS OF UNDILUTED WELD METAL

only for those specific elements that failed to meet the test requirement.

8. Weld Test Assemblies

8.1 Between two and four weld test assemblies are required (according to the classification under test) for the tests specified in Table 4. They are as follows:

(a) The weld pad in Fig. 1 for chemical analysis of the undiluted weld metal

(b) The groove weld in Fig. 2 for tension, impact, and radiographic testing of the weld metal

(c) The groove weld in Fig. 3 for the bend test

(d) The fillet weld in Fig. 4 for usability of the electrode or rod

The sample for chemical analysis may be taken from the reduced section of the fractured tension test specimen or from a corresponding location (or any location above it) in the grove weld in Fig. 2, thereby avoiding the need to make the weld pad. In case of dispute, the weld pad shall be the referee method.

8.2 Preparation of each weld test assembly shall be as prescribed in 8.3, 8.4 and 8.5. Base metal for each assembly shall conform to the following, or an equivalent:

8.2.1 The base metal shall be steel (carbon, alloy, stainless steel or ingot iron) of 0.25 percent carbon, maximum, for chemical analysis of all electrode classifications except those with 0.04 wt.% carbon or less (low-carbon classifications). For chemical analysis of

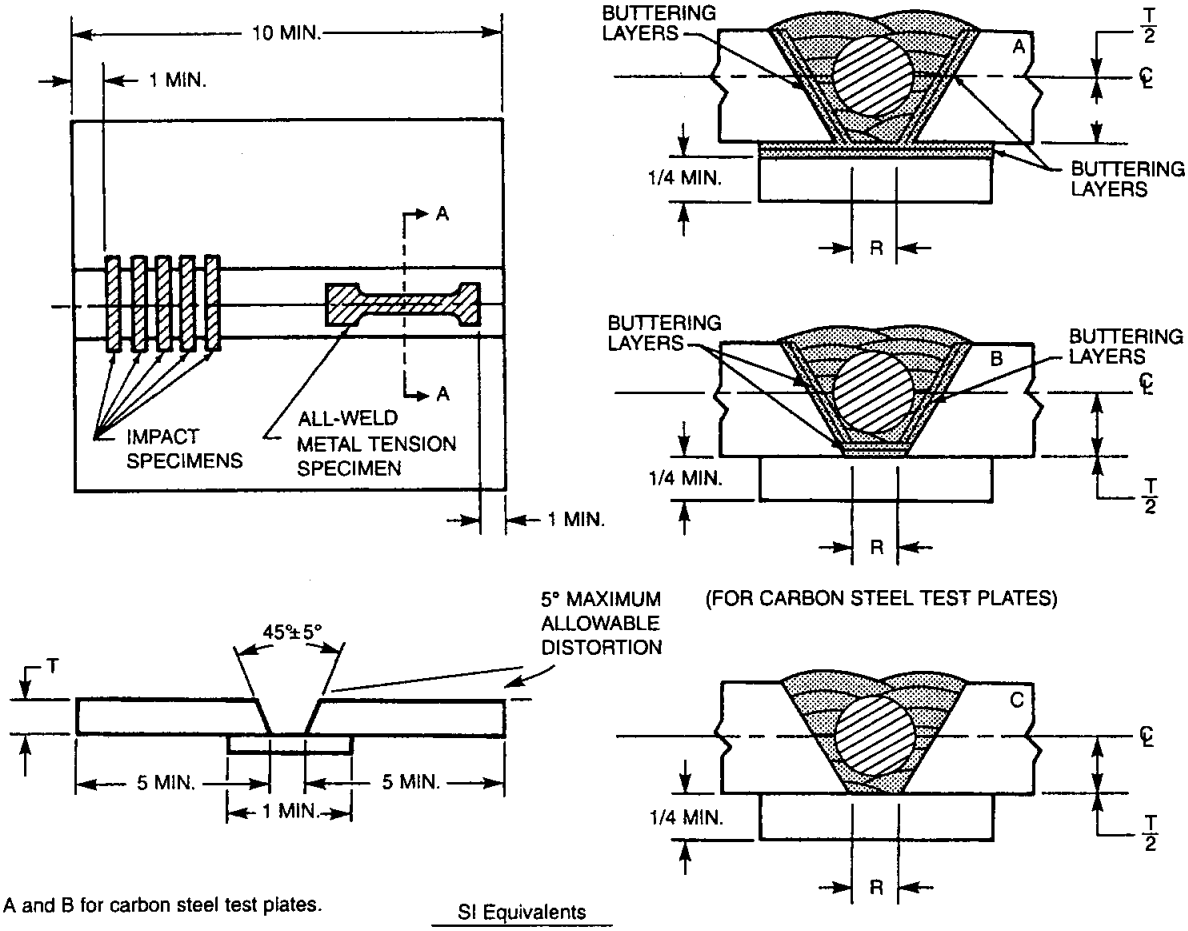

A and B for carbon steel test plates.

C for test plates of matching composition or Type 304 stainless steel for the E3XXTX-X classifications only.

SI Equivalents	
in.	mm
1/4	6.4
1	25
5	125
10	250

AWS Classification	Diameter		(T) Plate Thickness		(R) Root Openings		Recommended Passes per Layer		Recommended Number of Layers
	in.	mm	in.	mm	in.	mm	Layer 1 and 2	Layer 3 to Top	
E3XXTX-X E316LKTO-3 E4XXTX-X E5XXTX-X E2XXXTX-X	0.035	0.9	1/2	12.7	3/8	9.5	1 or 2	2, 3, or 4	6 to 9
	0.045	1.2	3/4	19	3/8	9.5	1 or 2	2 or 3*	5 to 8
	0.052	1.4							
	1/16	1.6							
	5/64	2.0							
	3/32	2.4							
	7/64	2.8	3/4	19	3/8	9.5	1 or 2	2 or 3*	4 to 6
	1/8	3.2							
	5/32	4.0							
R3XXT1-5	5/64	2.0	1/2	12.7	1/4	6.4	1 or 2	2 or 3*	5 to 8
	0.087	2.2							
	3/32	2.4							

*Final layer may be 4 passes.

Notes:
1. The dimensions for the tensile test specimen shall conform to Figure 6.
2. For E316LKT0-3 test assemblies, length may be extended as needed for Charpy V-notch impact specimens.

FIG. 2 GROOVE WELD ASSEMBLY FOR TENSION, IMPACT, AND RADIOGRAPHIC TESTS

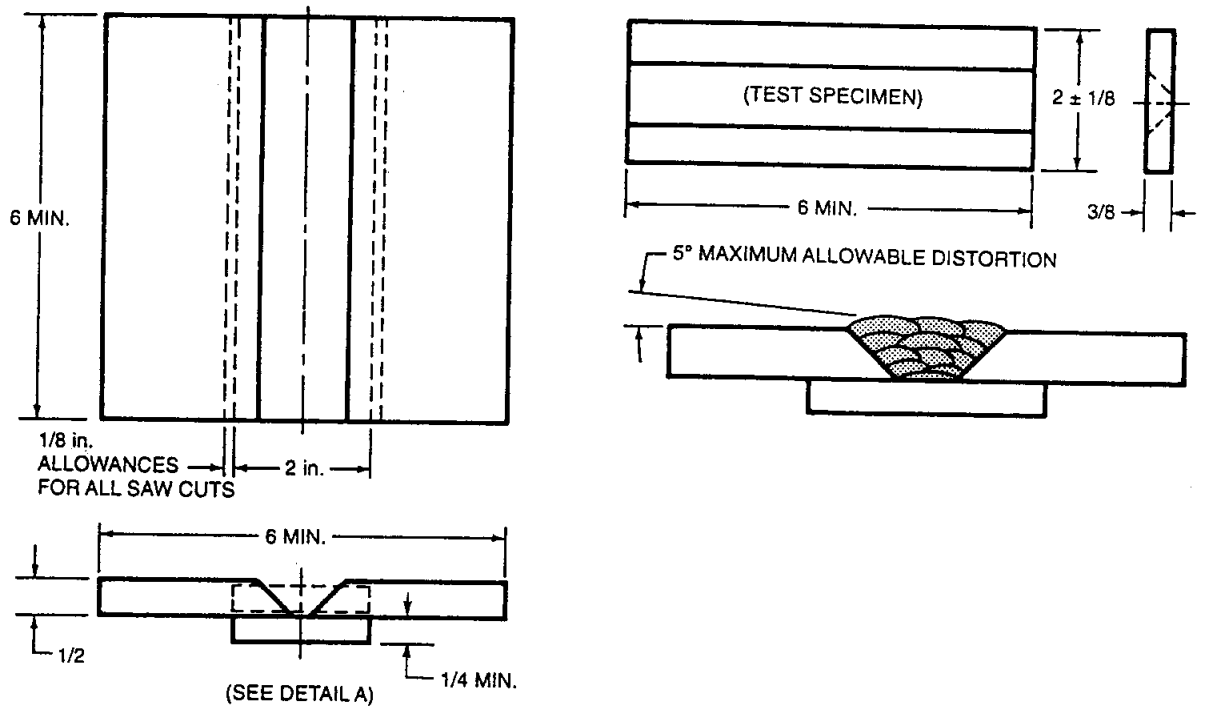

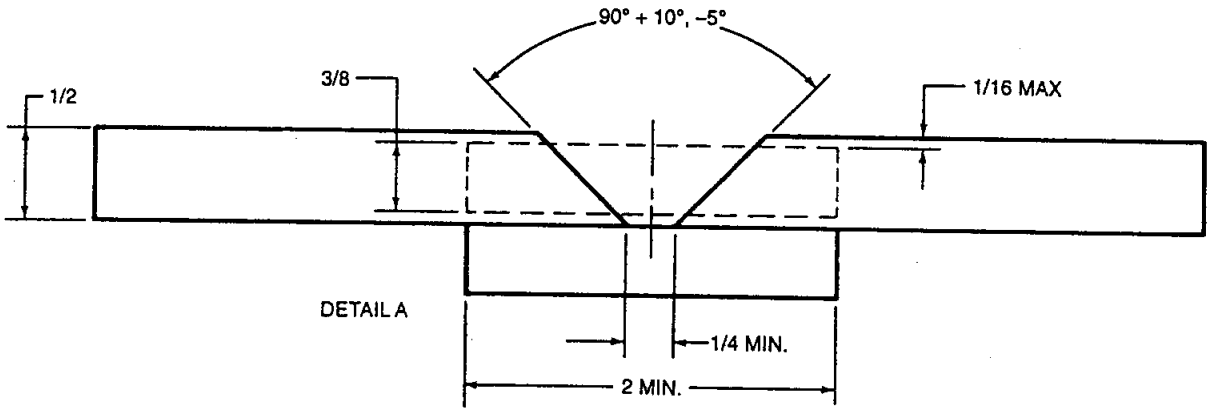

SI Equivalents	
in.	mm
1/16	1.6
1/8	3.2
1/4	6.4
3/8	9.5
1/2	12.7
1	25
2	50
6	150

All dimensions except angles are in inches.

Electrode Diameter		Suggested Passes Per Layer		Suggested Number of Layers
in.	mm	Layer 1	Layers 2 to Top	
0.035 0.045 1/16 5/64 3/32	0.90 1.2 1.6 2.0 2.4	1	2 to 3	3 to 5
7/64 1/8 5/32	2.8 3.2 4.0	1	1 to 2	2 to 4

*Top layer must be 2 passes minimum.

FIG. 3A GROOVE WELD ASSEMBLY FOR FACE BEND TEST

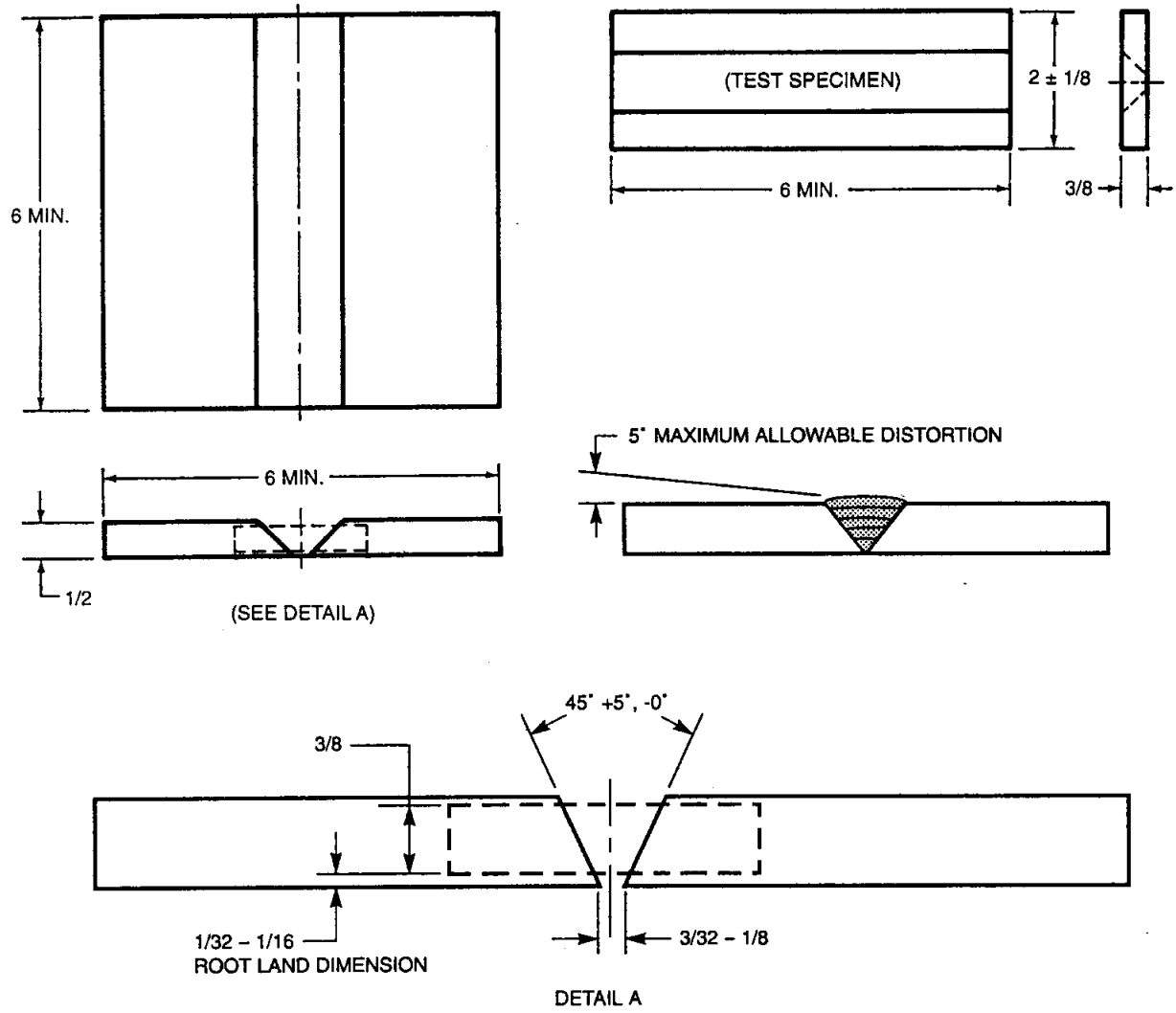

NOTE: Remove amount of material necessary to clean up root surface. Material removed should not exceed 1/64 in. (0.4 mm).

SI Equivalents	
in.	mm
1/32	0.8
1/16	1.6
3/32	2.4
1/8	3.2
3/8	9.5
1/2	12.7
2	50
6	150

All dimensions except angles are in inches.

AWS Classification	Diameter		Passes Per Layer		
	in.	mm	Layer 1	Layers 2	Layer 3 to Completion
R3XXT1-5	5/64 0.087 3/32	2.0 2.2 2.4	1	1	As required

FIG. 3B GROOVE WELD ASSEMBLY FOR ROOT BEND TEST

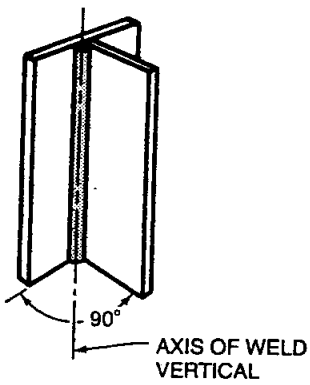

VERTICAL FILLET WELDS

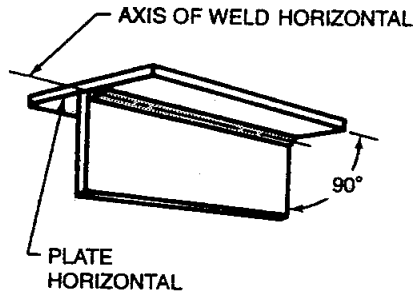

OVERHEAD FILLET WELDS

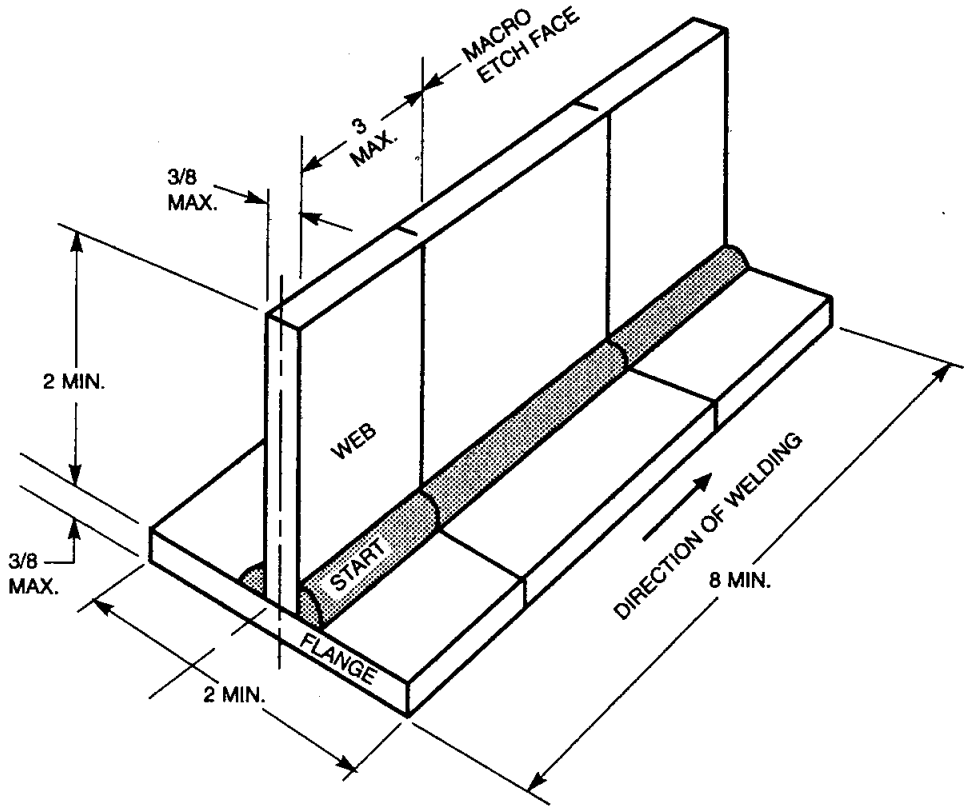

Flange to be straight and in intimate contact with square machined edge of web member along entire length to insure maximum restraint.

NOTE: ALL DIMENSIONS EXCEPT ANGLES ARE IN INCHES.

SI Equivalents	
in.	mm
3/8	9.5
2	50
3	75
8	200

FIG. 4 PREPARATION OF FILLET WELD TEST SPECIMEN

these low-carbon classifications, the base metal shall be steel of 0.03 percent maximum carbon or other steels having a carbon content of 0.25 percent maximum with the further restrictions specified in 8.3.2.

8.2.2 For the all-weld-metal tension, radiographic, and impact tests, the steel to be used shall be of a matching type. Type 304 stainless steel may be used when testing any of the E3XXTX-X classifications. Optionally, the steel may conform to one of the following specifications or their equivalents, providing two buttering layers of filler metal as shown in Fig. 2, are deposited in stringer beads using electrodes or rods of the same classification as that being classified.

(1) ASTM specification A285, *Pressure Vessel Plates, Carbon Steel, Low- and Intermediate-Tensile Strength,* Grade C

(2) ASTM specification A36, *Structural Steel*

(3) ASTM specification A515, *Pressure Vessel Plates, Carbon Steel, for Intermediate- and Higher-Temperature Service,* Grade 70

8.2.3 For the face bend test, the base metal shall be of a matching type or Type 304 stainless steel.

8.2.4 For the fillet weld test, the steel to be used shall conform to the following specifications:

(1) For 300 series electrodes—matching or Type 304 stainless steel

(2) For 400 or 500 series electrodes—matching or carbon steel

(3) For duplex alloy electrodes—matching or Type 304 stainless steel

8.3 Weld Pad

8.3.1 A weld pad shall be prepared as shown in Fig. 1 (except when one of the alternatives to a weld pad in 8.1 is selected). Base metal as specified in 8.2 shall be used as the base for the weld pad. The surface of the base metal on which the filler metal is deposited shall be clean. The pad shall be welded in the flat position with multiple beads and multiple layers to obtain undiluted weld metal. The preheat temperature shall be not less than 60°F (16°C). The slag shall be removed after each pass. The amperage or wire feed speed and the arc voltage shall be as recommended by the manufacturer. The shielding medium and polarity shall be as specified in Table 2. The pad may be quenched in water between passes (if the pad is to be used for ferrite determination, see A6.9). The dimensions of the completed pad shall be as shown in Fig. 1, for each size of electrode or rod. Testing of this assembly shall be as specified in Section 9, Chemical Analysis.

TABLE 5
PREHEAT AND INTERPASS TEMPERATURE REQUIREMENTS FOR GROOVE WELD TEST ASSEMBLIES

	Temperature			
	Minimum		Maximum	
AWS Classification	°F	°C	°F	°C
E2XXXTX-X	60	16	300	150
E3XXTX-X	60	16	300	150
R3XXT1-5	60	16	300	150
E4XXTX-X*	300	150	500	260
E5XXTX-X	300	150	500	260
EXXXTX-X	Not Specified			

* Except for E410TX-X, which shall be 400°F (204°C) minimum preheat and 600°F (316°C) maximum interpass temperature.

8.3.2 The pad shall be at least four layers high. More than four layers may be required to obtain undiluted weld metal when base metal containing more than 0.03% carbon is used with the low-carbon classifications (i.e. those with the letter "L" in the designation).

8.4 Groove Weld

8.4.1 Mechanical Properties and Soundness

8.4.1.1 A test assembly shall be prepared and welded as specified in Fig. 2 and in 8.4.1.2 and 8.4.1.3, using base metal of the appropriate type specified in 8.2.2.

8.4.1.2 The test assembly shall be welded in the flat position using the shielding medium and polarity shown in Table 2, and the amperage or wire feed speed and arc voltage recommended by the manufacturer. The test assembly shall be preset or sufficiently restrained during welding to prevent warpage in excess of five degrees. A welded test assembly that has warped more than five degrees shall be discarded. Welded test assemblies shall not be straightened.

8.4.1.3 The preheat and interpass temperatures shall be as specified in Table 5. These temperatures are measured mid-length of the assembly at a distance of 1 in. (25 mm) from the centerline of the weld. These temperatures are required also for all buttering passes. After each pass, the assembly shall be allowed to cool in air (not quenched in water) to a temperature within the range specified in Table 5.

8.4.1.4 The assembly shall be tested as specified in Sections 10, 11 and 13 with or without a postweld

heat treatment as specified in Table 6, for the classification under test.

8.4.2 Bend Test

8.4.2.1 A test assembly shall be prepared and welded as shown in Fig. 3A or 3B, as applicable, and specified in 8.4.2.2 through 8.4.2.4 using base metal of the appropriate type specified in 8.2.2.

8.4.2.2 The test assembly shall be welded in the flat position using the shielding medium, polarity, and welding process specified in Table 2, and the amperage or wire feed speed and arc voltage recommended by the manufacturer. The test assembly shall be present or sufficiently restrained to prevent warpage in excess of five degrees. A welded test assembly that has warped more than five degrees shall be discarded. Weld test assemblies shall not be straightened.

8.4.2.3 The preheat and interpass temperatures shall be as specified in Table 5. Those temperatures are measured mid-length of the assembly at a distance of 1 in. (25 mm) from the centerline of the weld. After each pass, the assembly shall be allowed to cool in air (not quenched in water) to a temperature within the range specified in Table 5.

8.4.2.4 The third and subsequent layers of the test assembly for R3XXT1-5 rods may be welded with a similar classification of shielded metal arc welding electrodes, flux cored electrodes or rods, metal cored electrodes or solid wire electrodes.

8.4.2.5 The assembly shall be tested as specified in Section 12, Bend Test, in the as-welded condition.

8.5 Fillet Weld

8.5.1 Fillet weld tests, when required by Table 4, shall be performed in the vertical and overhead positions. A test assembly shall be prepared and welded as shown in Fig. 4 using base metal of the appropriate type specified in 8.2.4, and using the shielding medium and polarity shown in Table 2 and the amperage or wire feed speed and arc voltage recommended by the manufacturer. Testing of the assembly shall be as specified in Section 14, Fillet Weld Test.

8.5.2 In preparing the two plates forming the test assembly, the standing member (web) shall have one edge prepared so that when the web is set upon the base plate (flange), which shall be straight and smooth, there will be intimate contact along the entire length of the joint.

8.5.3 A single-pass fillet weld shall be deposited on one side of the joint. When welding in the vertical position, the welding shall progress upwards.

8.5.4 After completing the weld on the first side of the joint, the assembly shall be cooled to room temperature (but not less than 60°F ([16°C]) by any convenient means before commencing to weld on the second side (see Note).

Note: If water is used as the coolant, care should be taken that it has been thoroughly removed from the joint before beginning welding on the second side.

8.5.5 The fillet weld shall be deposited on the second side of the joint with the same procedure used for the fillet weld on the first side.

9. Chemical Analysis

9.1 Flux cored electrodes and rods shall be analyzed in the form of weld metal, not filler metal.

9.2 The sample for analysis shall be taken from weld metal obtained from either the weld pad prepared according to 8.3 or one of the alternatives in 8.1 produced with the filler metal and shielding medium with which they are classified.

9.2.1 The sample for analysis of weld metal from the pad shall be taken from material above the third layer of weld metal and at least the minimum height above the base metal as specified in Fig. 1. The sample shall be free of slag and all other foreign materials. The sample may have to be taken from a higher level for weld metal from the low-carbon classifications (those with the letter "L" in the designation), when base metals containing more than 0.03% of carbon are used for the pad.

9.2.2 The sample of weld metal from the reduced section of the fractured tension test specimen, or from a corresponding location (or any location above it) in the groove weld in Fig. 2, shall be prepared for analysis by any suitable mechanical means.

9.3 The sample shall be analyzed by accepted analytical methods. The referee method shall be ASTM Standard Method E353, *Chemical Analysis of Stainless, Heat-Resisting, Maraging and Other Similar Chromium-Nickel-Iron Alloys.*

9.4 The results for the analysis shall meet the requirements of Table 1 for the classification of electrode or rod under test.

TABLE 6
TENSION TEST REQUIREMENTS

AWS Classification[a]	Tensile Strength, minimum ksi	Tensile Strength, minimum MPa	Elongation Percent, Min.	Postweld Heat Treatment
E307TX-X	85	590	30	None
E308TX-X	80	550	35	None
E308LTX-X	75	520	35	None
E308HTX-X	80	550	35	None
E308MoTX-X	80	550	35	None
E308LMoTX-X	75	520	35	None
E309TX-X	80	550	30	None
E309LCbTX-X	75	520	30	None
E309LTX-X	75	520	30	None
E309MoTX-X	80	550	25	None
E309LMoTX-X	75	520	25	None
E309LNiMoTX-X	75	520	25	None
E310TX-X	80	550	30	None
E312TX-X	95	660	22	None
E316TX-X	75	520	30	None
E316LTX-X	70	485	30	None
E317LTX-X	75	520	20	None
E347TX-X	75	520	30	None
E409TX-X	65	450	15	None
E410TX-X	75	520	20	(b)
E410NiMoTX-X	110	760	15	(c)
E410NiTiTX-X	110	760	15	(c)
E430TX-X	65	450	20	(d)
E502TX-X	60	415	20	(e)
E505TX-X	60	415	20	(e)
E308HMoT0-3	80	550	30	None
E316LKT0-3	70	485	30	None
E2209TX-X	100	690	20	None
E2553TX-X	110	760	15	None
EXXXTX-G	Not Specified			
R308LT1-5	75	520	35	None
R309LT1-5	75	520	30	None
R316LT1-5	70	485	30	None
R347T1-5	75	520	30	None

NOTE:

a. In this table, the "X" following the "T" refers to the position of welding (1 for all-position or 0 for flat or horizontal operation) and the "X" following the dash refers to the shielding medium (−1, −3 or −4) as shown in the AWS Classification.

b. The weld test assembly (or the blank from it, from which the tensile test specimen is to be machined) shall be heated to a temperature between 1350 and 1400°F (732 and 760°C), held for 1 hour, then furnace cooled to 600°F (316°C) at a rate not to exceed 100°F (55°C) per hour, then cooled in air to room temperature.

c. The weld test assembly (or the blank from it, from which the tensile test specimen is to be machined) shall be heated to a temperature between 1100 and 1150°F (593 and 621°C), held for 1 hour, then cooled in air to room temperature.

d. The weld test assembly (or the blank from it, from which the tensile test specimen is to be machined) shall be heated to a temperature between 1400 and 1450°F (760 and 788°C), held for 4 hours, then furnace cooled to 1100°F (593°C) at a rate not to exceed 100°F (55°C) per hour, then cooled in air to room temperature.

e. The weld test assembly (or blank from it, from which the tensile test specimen is to be machined) shall be heated to a temperature between 1550 and 1600°F (840 and 870°C) held for 2 hours, then furnace cooled to 1100°F (593°C) at a rate not to exceed 100°F (55°C) per hour, then cooled in air to room temperature.

10. Radiographic Test

10.1 When required in Table 4, the groove weld described in 8.4.1 and shown in Fig. 2 shall be radiographed to evaluate the soundness of the weld metal. In preparation for radiography, the backing shall be removed and both surfaces of the weld shall be machined or ground smooth and flush with the original surfaces of the base metal or with a uniform reinforcement not exceeding $^3/_{32}$ in. (2.4 mm). Both surfaces of the test assembly, in the area of the weld, shall be smooth enough to avoid difficulty in interpreting the radiograph.

10.2 The weld shall be radiographed in accordance with ASTM E142, *Standard Method for Controlling Quality of Radiographic Testing.* The quality level of inspection shall be 2-2T.

10.3 The soundness of the weld metal meets the requirements of this specification if the radiograph shows none of the following:

(1) cracks

(2) incomplete fusion

(3) incomplete penetration

(4) rounded indications in excess of those permitted by the radiographic standards in Fig. 5A or 5B, as applicable

(5)(a) in any 6 in. (150 mm) length of the $^1/_2$ in. (13 mm) thick test assembly: no individual slag inclusion longer than $^7/_{32}$ in. (5.6 mm) and a maximum total length of $^7/_{16}$ in. (11 mm) for all slag inclusions

(b) in any 6 in. (150 mm) length of the $^3/_4$ in. (19 mm) thick test assembly: no individual slag inclusion in excess of $^9/_{32}$ in. (7.1 mm) and a maximum total length of $^{15}/_{32}$ in. (12 mm) for all slag inclusions

In evaluating the radiograph, 1 in. (25 mm) of the weld on each end of the test assembly shall be disregarded.

10.3.1 A rounded indication is an indication (on the radiograph) whose length is no more than three times its width. Rounded indications may be circular or irregular in shape, and they may have tails. The size of a rounded indication is the largest dimension of the indication, including any tail that may be present. The indications may be of porosity, or tungsten inclusions.

10.3.2 Indications whose largest dimension does not exceed $^1/_{64}$ in. (0.4 mm) shall be disregarded. Test assemblies with indications in excess of the sizes permitted in the radiographic standards do not meet the requirements of this specification.

11. Tension Test

11.1 One all-weld-metal tension test specimen shall be machined from the groove weld described in 8.4.1 and shown in Fig. 2. The dimensions of the specimen shall be as shown in Fig. 6.

11.2 The specimen shall be tested in the manner described in the tension test section of ANSI/AWS B4.0, *Standard Methods for Mechanical Testing of Welds.*

11.3 The results of the tension test shall meet the requirements specified in Table 6.

12. Bend Test

12.1 Electrodes

12.1.1 One longitudinal face bend specimen, as required in Table 4, shall be machined from the groove weld test assembly described in 8.4.2 and shown in Fig. 3A.

12.1.2 Backing strip and weld reinforcement shall be removed by machining. Grinding of the face surface of the specimen shall follow. The corners on the face side of the specimen shall be slightly rounded by filing or grinding. The longitudinal face bend test specimen shall be uniformly bent through 180 degrees over a radius of $^3/_4$ in. (19 mm). Typical bending jigs are shown in ANSI/AWS B4.0, *Standard Methods for the Mechanical Testing of Welds.* The specimen shall be positioned so that the face of the weld is in tension.

12.1.3 After bending, the bend test specimen shall conform to the designated radius, with appropriate allowance for springback, and the weld metal shall show no defects on the tension face greater than $^1/_8$ in. (3.2 mm).

12.2 Rods

12.2.1 One longitudinal root bend specimen, as required in Table 4, shall be machined from the groove weld assembly described in 8.4.2 and shown in Fig. 3B.

12.2.2 Weld reinforcement shall be removed by machining. Grinding of both faces of the specimen shall follow. All corners on the root side of the specimen shall be slightly rounded by filing or grinding. The longitudinal root bend specimen shall be bent uniformly through a radius of $^3/_4$ in. (19 mm). Typical bending jigs are shown in ANSI/AWS B4.0, *Standard Methods for Mechanical Testing of Welds.* The specimen shall be positioned so that the root of the weld is in tension.

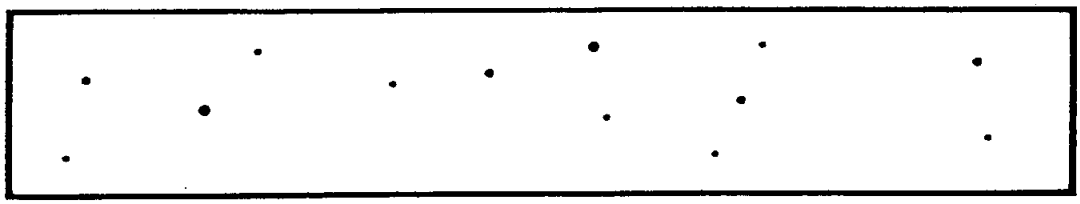

(A) ASSORTED ROUNDED INDICATIONS

SIZE 1/64 in. (0.4 mm) TO 1/16 in. (1.6 mm) IN DIAMETER OR IN LENGTH.
MAXIMUM NUMBER OF INDICATIONS IN ANY 6 in. (150 mm) OF WELD = 13, WITH THE FOLLOWING RESTRICTIONS:
MAXIMUM NUMBER OF LARGE 3/64 in. (1.2 mm) TO 1/16 in. (1.6 mm) IN DIAMETER OR IN LENGTH INDICATIONS = 2.
MAXIMUM NUMBER OF MEDIUM 1/32 in. (0.8 mm) TO 3/64 in. (1.2 mm) IN DIAMETER OR IN LENGTH INDICATIONS = 4.
MAXIMUM NUMBER OF SMALL 1/64 in. (0.4 mm) TO 1/32 in. (0.8 mm) IN DIAMETER OR IN LENGTH INDICATIONS = 7.



(B) LARGE ROUNDED INDICATIONS

SIZE 3/64 in. (1.2 mm) TO 1/16 in. (1.6 mm) IN DIAMETER OR IN LENGTH.
MAXIMUM NUMBER OF INDICATIONS IN ANY 6 in. (150 mm) OF WELD = 6.

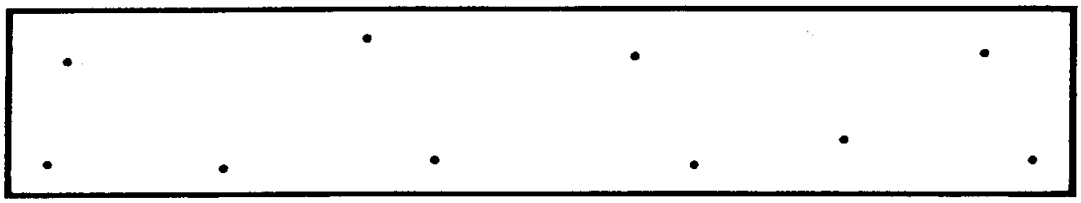

(C) MEDIUM ROUNDED INDICATIONS

SIZE 1/32 in. (0.8 mm) TO 3/64 in. (1.2 mm) IN DIAMETER OR IN LENGTH.
MAXIMUM NUMBER OF INDICATIONS IN ANY 6 in. (150 mm) OF WELD = 10.

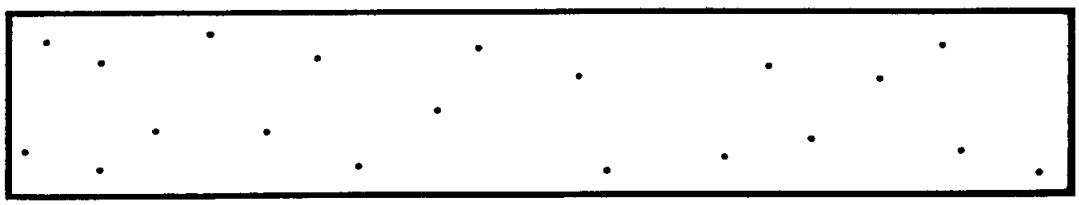

(D) SMALL ROUNDED INDICATIONS

SIZE 1/64 in. (0.4 mm) TO 1/32 in. (0.8 mm) IN DIAMETER OR IN LENGTH.
MAXIMUM NUMBER OF INDICATIONS IN ANY 6 in. (150 mm) OF WELD = 20.

Notes:
1. In using these standards, the chart which is most representative of the size of the rounded indications present in the test specimen radiograph shall be used for determining conformance to these radiographic standards.
2. Since these are test welds specifically made in the laboratory for classification purposes, the radiographic requirements for these test welds are more rigid than those which may be required for general fabrication.

FIG. 5A ROUNDED INDICATION STANDARDS FOR RADIOGRAPHIC TEST—1/2 IN. PLATE

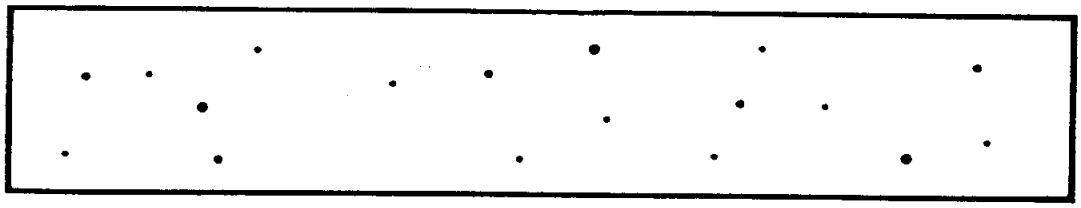

(A) ASSORTED ROUNDED INDICATIONS

SIZE 1/64 in. (0.4 mm) TO 1/16 in. (1.6 mm) IN DIAMETER OR IN LENGTH.
MAXIMUM NUMBER OF INDICATIONS IN ANY 6 in. (150 mm) OF WELD = 18, WITH THE FOLLOWING RESTRICTIONS:
MAXIMUM NUMBER OF LARGE 3/64 in. (1.2 mm) TO 1/16 in. (1.6 mm) IN DIAMETER OR IN LENGTH INDICATIONS = 3.
MAXIMUM NUMBER OF MEDIUM 1/32 in. (0.8 mm) TO 3/64 in. (1.2 mm) IN DIAMETER OR IN LENGTH INDICATIONS = 5.
MAXIMUM NUMBER OF SMALL 1/64 in. (0.4 mm) TO 1/32 in. (0.8 mm) IN DIAMETER OR IN LENGTH INDICATIONS = 10.

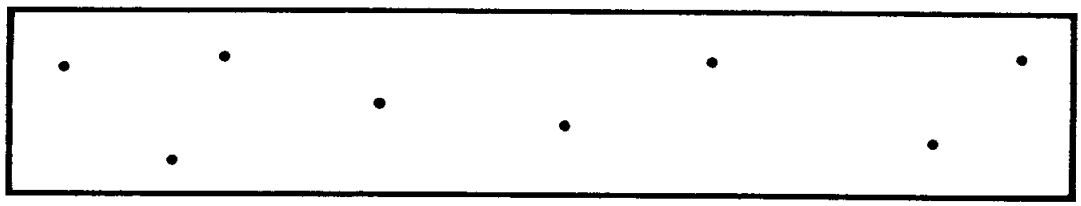

(B) LARGE ROUNDED INDICATIONS

SIZE 3/64 in. (1.2 mm) TO 1/16 in. (1.6 mm) IN DIAMETER OR IN LENGTH.
MAXIMUM NUMBER OF INDICATIONS IN ANY 6 in. (150 mm) OF WELD = 8.

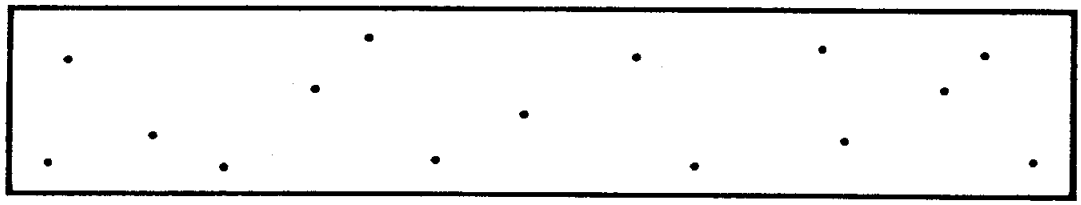

(C) MEDIUM ROUNDED INDICATIONS

SIZE 1/32 in. (0.8 mm) TO 3/64 in. (1.2 mm) IN DIAMETER OR IN LENGTH.
MAXIMUM NUMBER OF INDICATIONS IN ANY 6 in. (150 mm) OF WELD = 15.

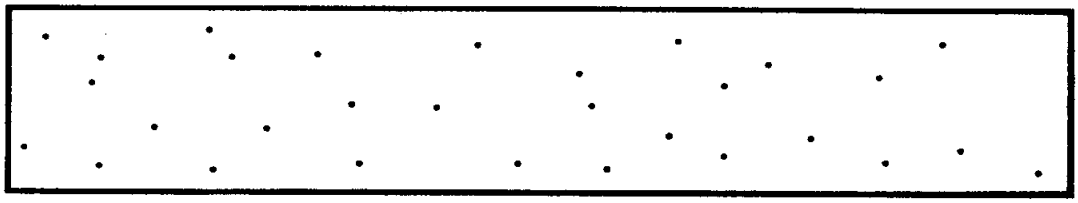

(D) SMALL ROUNDED INDICATIONS

SIZE 1/64 in. (0.4 mm) TO 1/32 in. (0.8 mm) IN DIAMETER OR IN LENGTH.
MAXIMUM NUMBER OF INDICATIONS IN ANY 6 in. (150 mm) OF WELD = 30.

Notes:
1. In using these standards, the chart which is most representative of the size of the rounded indications present in the test specimen radiograph shall be used for determining conformance to these radiographic standards.
2. Since these are test welds specifically made in the laboratory for classification purposes, the radiographic requirements for these test welds are more rigid than those which may be required for general fabrication.

FIG. 5B ROUNDED INDICATION STANDARDS FOR RADIOGRAPHIC TEST—3/4 IN. PLATE

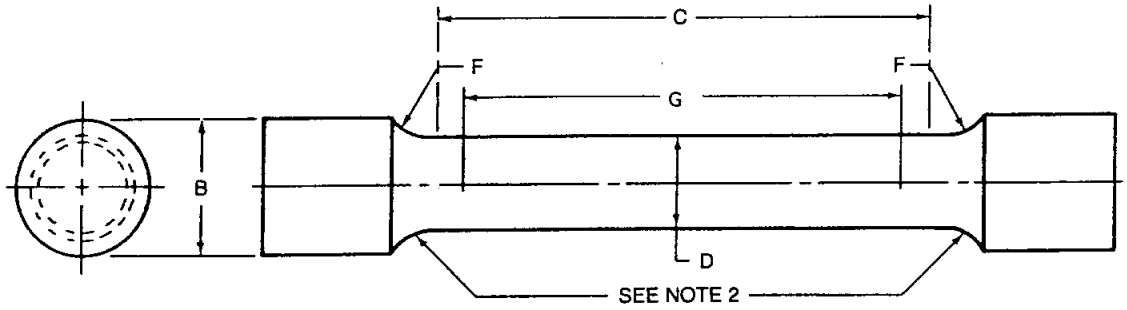

G = GAUGE LENGTH

Dimensions of Specimen, in.						
Test Assembly Thickness	D	G	C	B	F, min.	Approximate Area, $in.^2$
3/4	0.500 ± 0.010	2.000 ± 0.005	2-1/4	3/4	0.38 (3/8)	0.2
1/2	0.250 ± 0.005	1.000 ± 0.005	1-1/4	3/8	0.18	0.05
Dimensions of Specimen, mm						
Test Assembly Thickness	D	G	C	B	F, min.	Approximate Area, mm^2
19	12.7 ± 0.25	51 ± 0.13	57	19	9.5	129
12.7	6.4 ± 0.13	25.4 ± 0.13	32	9.5	4.6	32

Notes:
1. Dimensions G and C shall be as shown, but the ends may be of any shape required to fit the testing machine, as long as the load is kept axial.
2. The diameter of the specimen within the gage length shall be slightly smaller at the center than at the ends. The difference shall not exceed one percent of the diameter.
3. The finish of the surface within the C dimension shall be no rougher than 63 μin. (1.6 μm).

FIG. 6 TENSION TEST SPECIMEN

12.2.3 After bending, the bend test specimen shall conform to the designated radius, with appropriate allowance for springback, and the weld metal shall show no defects on the tension face greater than $\frac{1}{8}$ in. (3.2 mm).

13. Impact Test (E316LKT0-3 Electrodes Only)

13.1 Five full size, 0.394 in. by 0.394 in. (10 mm by 10 mm) Charpy V-notch impact specimens (see Fig. 7) shall be machined from the test assembly (see Fig. 2) for testing of E316LKT0-3 electrodes.

13.2 The five specimens shall be tested at a temperature of −320°F (−196°C) in accordance with the impact test section of ANSI/AWS B4.0, *Standard Methods for Mechanical Testing of Welds.*

13.3 Lateral expansion shall be measured in accordance with ASTM E23, *Test Methods for Notched Bar Impact Testing of Metallic Materials.* In evaluating the test results, the highest and lowest lateral expansion values shall be disregarded. The remaining three impact specimens shall exhibit a lateral expansion of 0.015 in. (0.4 mm) minimum when tested at −320°F (−196°C).

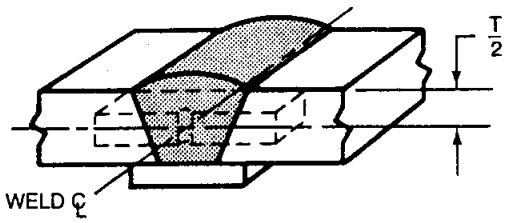

Note: Specimen size to be in accordance with ANSI/AWS B4.0, *Standard Methods for Mechanical Testing of Welds.*

FIG. 7 ORIENTATION AND LOCATION OF IMPACT TEST SPECIMEN

14. Fillet Weld Test

14.1 The fillet weld test, when required in Table 4, shall be made in accordance with 8.5 and Fig. 4. The

entire face of the completed fillet weld shall be examined visually. The weld shall be free from cracks or other open defects that would affect the strength of the weld. After the visual examination, a cross section shall be taken as shown in Fig. 4. The cross-sectional surface shall be polished and etched, and then examined as required in 14.2.

14.2 Scribe lines shall be placed on the prepared surface, as shown in Fig. 8, and the leg length and the convexity shall be determined to the nearest $^1/_{64}$ in. (0.4 mm) by actual measurement.

14.2.1 Both fillet welds shall have penetration to or beyond the junction of the edges of the plates.

14.2.2 The legs and convexity of each fillet weld shall be within the limits prescribed in Fig. 8.

14.2.3 The fillet welds shall show no evidence of cracks.

14.2.4 The welds shall be reasonably free from undercutting, overlap, trapped slag, and porosity.

PART C — MANUFACTURE, IDENTIFICATION, AND PACKAGING

15. Method of Manufacture

The electrodes and rods classified according to this specification may be manufactured by any method that will produce material that meets the requirements of this specification.

16. Standard Sizes

Standard sizes for electrodes and rods are shown in Table 7.

17. Finish and Uniformity

17.1 All filler metal shall have a smooth finish that is free of slivers, depressions, scratches, scale, seams, laps (exclusive of the longitudinal joint), and foreign matter that would adversely affect the welding characteristics, the operation of the welding equipment, or the properties of the weld metal.

17.2 Each continuous length of filler metal shall be from a single lot of material. Welds, when present, shall have been made so as not to interfere with the uniform, uninterrupted feeding of the filler metal on automatic and semiautomatic equipment.

17.3 Core ingredients shall be distributed with sufficient uniformity throughout the length of the electrode or rod so as not to adversely affect performance or properties of the weld metal.

18. Standard Package Forms

18.1 Standard package forms are straight lengths, coils with support, coils without support, spools, and drums. Standard package dimensions and weights for each form are given in Tables 8 and 9. Package forms, sizes and weights other than these shall be as agreed upon between purchaser and supplier.

18.2 The liners in coils with support shall be designed and constructed to prevent distortion of the coil during normal handling and use and shall be clean and dry enough to maintain the cleanliness of the filler metal.

18.3 Spools shall be designed and constructed to prevent distortion of the filler metal during normal handling and use and shall be clean and dry enough to maintain the cleanliness of the filler metal (see Figs. 9, 10, and 11).

19. Winding Requirements

19.1 The filler metal shall be wound so that kinks, waves, sharp bends, or wedging are not encountered, leaving the filler metal free to unwind without restriction. The outside end of the filler metal (the end with which welding is to begin) shall be accessible and secured to avoid unwinding.

19.2 The cast and helix of filler metal in coils, spools, and drums shall be such that the filler metal will feed in an uninterrupted manner in automatic and semiautomatic equipment.

20. Filler Metal Identification

20.1 The product information and the precautionary information required in Section 21, Marking of Packages, shall also appear on each coil, spool, and drum.

20.2 Coils without support shall have a tag containing this information securely attached to the filler metal at the inside end of the coil.

20.3 Coils with support shall have the information securely affixed in a prominent location on the support.

20.4 Spools shall have the information securely affixed in a prominent location on the outside of one flange of the spool.

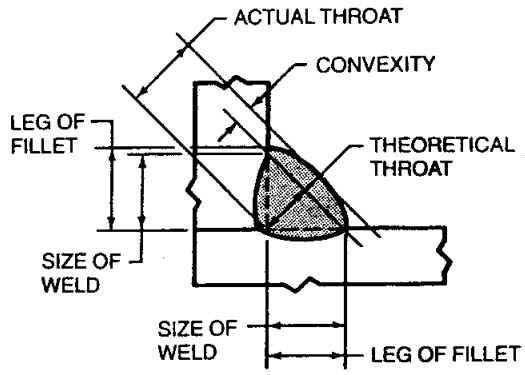

CONVEX FILLET

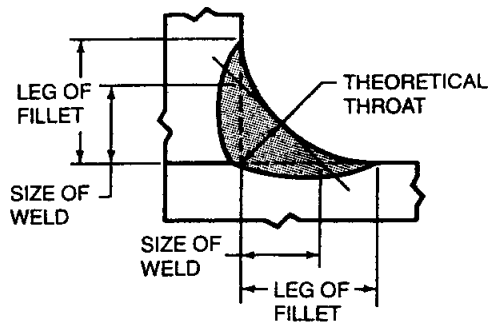

CONCAVE FILLET

Measured Fillet Weld Size		Maximum Convexity		Maximum Difference Between Fillet Weld Legs	
in.	mm	in.	mm	in.	mm
1/8 or less	3.0	5/64	2.0	1/32	0.8
9/64	3.5	5/64	2.0	3/64	1.2
5/32	4.0	5/64	2.0	3/64	1.2
11/64	4.5	5/64	2.0	1/16	1.6
3/16	5.0	5/64	2.0	1/16	1.6
13/64	5.0	5/64	2.0	5/64	2.0
7/32	5.5	5/64	2.0	5/64	2.0
15/64	6.0	5/64	2.0	3/32	2.4
1/4	6.5	5/64	2.0	3/32	2.4
17/64	6.5	3/32	2.4	7/64	2.8
9/32	7.0	3/32	2.4	7/64	2.8
19/64	7.5	3/32	2.4	1/8	3.2
5/16	8.0	3/32	2.4	1/8	3.2
21/64	8.5	3/32	2.4	9/64	3.6
11/32	8.5	3/32	2.4	9/64	3.6
23/64	9.0	3/32	2.4	5/32	4.0
3/8 or more	9.5	3/32	2.4	5/32	4.0

Notes:
1. Size of fillet weld = leg length of largest inscribed isosceles right triangle.
2. Fillet weld size, convexity, and leg lengths of fillet welds shall be determined by actual measurement (nearest 1/64 [0.4 mm]) on a section laid out with scribed lines shown.

FIG. 8 FILLET WELD TEST SPECIMEN AND DIMENSIONAL REQUIREMENTS

TABLE 7
STANDARD ELECTRODE AND ROD SIZES AND TOLERANCES[a]

Package Form	Diameter			Tolerance	
	in.		mm	in.	mm
Coils with Support, Spools	0.035		0.9	±0.002	±0.05
	0.045		1.2		
	0.052		1.4		
	1/16	(0.062)	1.6		
Coils without Support Coils with Support Drums Spools	5/64	0.078)	2.0	±0.003	±0.08
	3/32	(0.094)	2.4		
	7/64	(0.109)	2.8		
	1/8	(0.125)	3.2		
	5/32	(0.156)	4.0		
Straight Lengths[b]	5/64	(0.078)	2.0	±0.003	±0.08
	0.087		2.2		
	3/32	(0.094)	2.4		

NOTES:
a. Other sizes and forms shall be as agreed upon between the purchaser and supplier.
b. Length shall be 36 in. +0, −1/2 in. (915 mm +0, −13 mm).

TABLE 8
STANDARD DIMENSIONS FOR COILS, WITH AND WITHOUT SUPPORT, AND DRUMS

Coils						Drums	
Without Support		With Support					
Inside Diameter of Coil		Inside Diameter of Liner		Width of Wound Electrode, Max.		Outside Diameter	
in.	mm	in.	mm	in.	mm	in.	mm
12	300	12 ± 1/8	300 ± 3	4 5/8	120	15 1/2	400
22 1/2	570					20	500
						23	600

NOTE:
Other forms shall be as agreed upon between purchaser and supplier.

20.5 Drums shall have the information securely affixed to the side of the drum.

20.6 Identification of individual welding rods in straight lengths is not a requirement of this specification, but may be done as agreed upon between the purchaser and supplier.

21. Packaging

Filler metal shall be suitably packaged to ensure against damage during shipment and storage under normal conditions.

22. Marking of Packages

22.1 The following product information (as a minimum) shall be legibly marked so as to be visible from the outside of each unit package.

(1) AWS specification and classification designation (year of issue may be excluded)

(2) Supplier's name and trade designation

(3) Size and net weight

(4) Lot, control, or heat number

22.2 The following precautionary information (as a minimum) shall be prominently displayed in legible

TABLE 9
PACKAGING REQUIREMENTS[a]

Type of Package		Package Size			Net Weight of Electrode[b]	
			in.	mm	lb	kg
Coils Without Support		As specified by purchaser[c]			As specified by purchaser[c]	
Coils With Support (see below)		ID	6¾	170	14	6.4
		ID	12	300	25, 30, 50, and 60	11, 14, 23, and 27
Spools		OD	4	100	1½ and 2½	0.7 and 1.1
		OD	8	200	10, 15, and 22	4.5, 6.8, and 10
		OD	12	300	25, 30, and 35	11, 14, and 16
		OD	14	350	50 and 60	23 and 27
		OD	22	550	250	110
		OD	24	600	300	140
		OD	30	750	600 and 750	170 and 340
Drums		OD	15½	400	As specified by purchaser[c]	
		OD	20	500	As specified by purchaser[c]	
		OD	23	575	300 and 600	140 and 270

Coils with Support—Standard Dimensions and Weights[a]

Electrode Size	Coil Net Weight[b]		Coil Dimensions			
			Inside Diameter of Liner		Width of Wound Electrode, max.	
	lb	kg	in.	mm	in.	mm
All	14	6.4	6¾ ± ⅛	170 ± 3	3	75
	25 and 30	11 and 14	12 ± ⅛	300 ± 3	2½ or 4⅝	65 or 120
	50 and 60	23 and 27	12 ± ⅛	300 ± 3	4⅝	120

NOTES:
[a] Sizes and net weights other than those specified may be supplied as agreed between supplier and purchaser.
[b] Tolerance on net weight shall be ±10 percent.
[c] As agreed between supplier and purchaser.

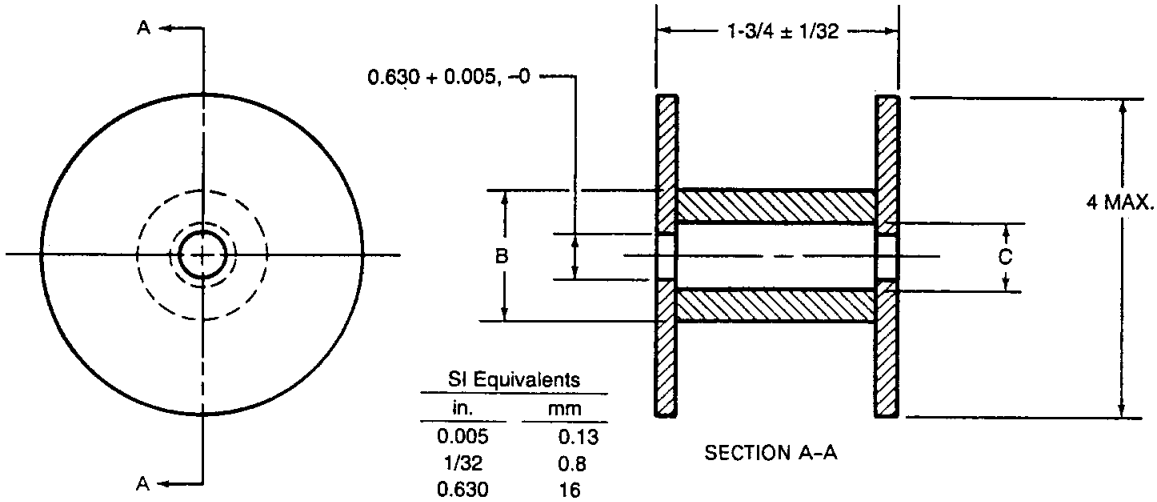

SI Equivalents	
in.	mm
0.005	0.13
1/32	0.8
0.630	16
1-3/4	44
4	100

All dimensions except angles are in inches.

Notes:

1. Dimension B, outside diameter of barrel, shall be such as to permit proper feeding of the filler metals.
2. Dimension C, inside diameter of barrel, shall be such that swelling of the barrel or misalignment of the barrel and flanges will not result in the inside diameter of the barrel being less than the inside diameter of the flanges.

FIG. 9 DIMENSIONS OF STANDARD 4 IN. (100 MM) SPOOL

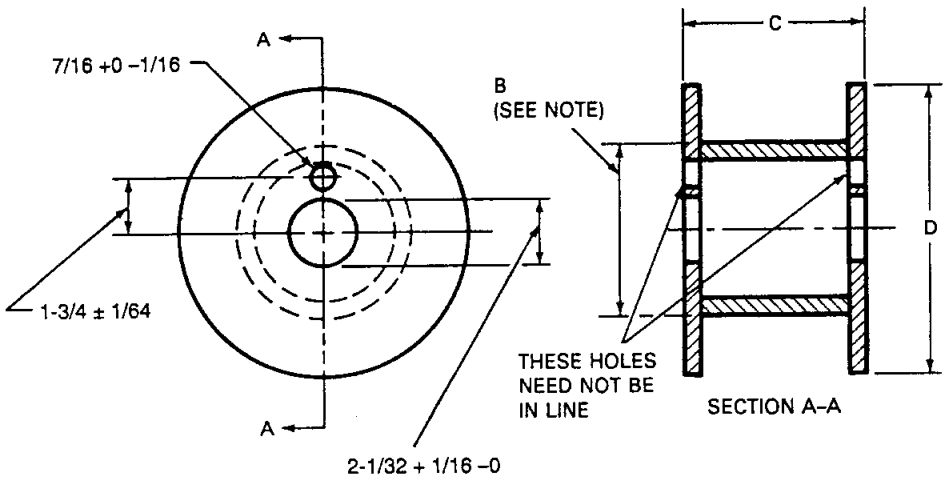

All dimensions except angles are in inches.

Spool Size		C Dimension		D Dimension (maximum)	
in.	mm	in.	mm	in.	mm
8	200	2-5/32 ± 1/32	55 ± 1	8	205
8	200	2-7/8 ± 1/16	75 ± 2	8	205
12	300	4 ± 1/16	100 ± 2	12	305
14	350	4 ± 1/16	100 ± 2	14	355

SI Equivalents	
in.	mm
1/64	0.4
1/16	1.6
7/16	11
1-3/4	44
2-1/32	52

Note: Dimension B, outside diameter of barrel, shall be such as to permit proper feeding of the electrode.

FIG. 10 DIMENSIONS OF STANDARD 8, 12, AND 14 IN. (200, 300 AND 350 MM) SPOOLS

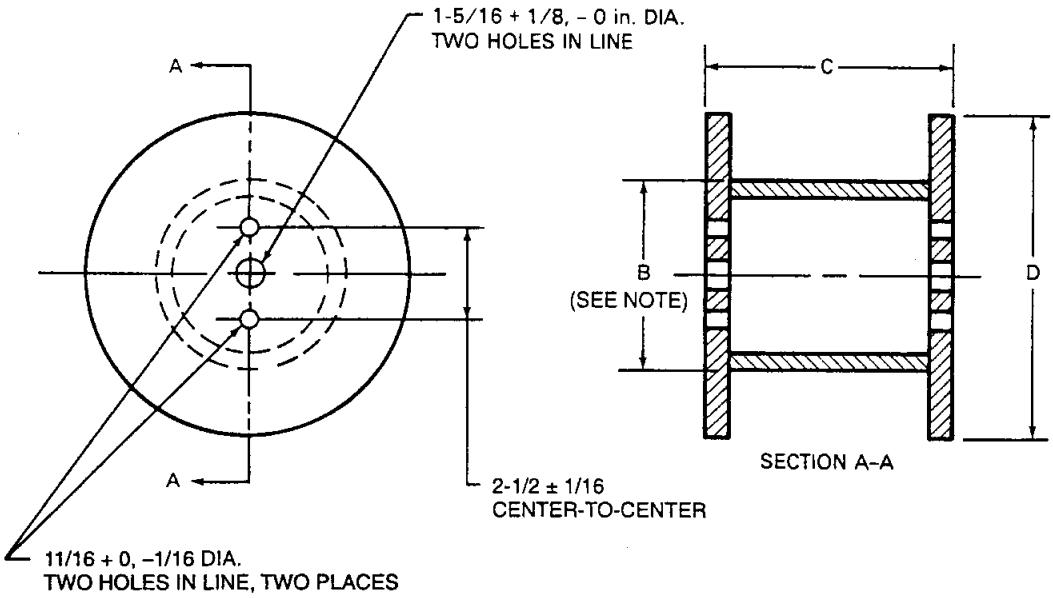

All dimensions except angles are in inches.

Spool Size		D Dimension		Maximum C Dimension	
in.	mm	in.	mm	in.	mm
22	550	22 ± 1/2	550 ± 12.7	12	300
24	600	24 ± 1/2	600 ± 12.7	13-1/2	338
30	750	30 ± 1/2	770 ± 12.7	13-1/2	338

Note: Dimension B, outside diameter of barrel, shall be such as to permit proper feeding of the electrode.

SI Equivalents	
in.	mm
1/16	1.6
1/8	3
11/16	18
1-5/16	33
2-1/2	63

FIG. 11 DIMENSIONS OF 22, 24, AND 30 IN. (550, 600, AND 750 MM) SPOOLS

print on all packages of welding electrodes or rods, including individual unit packages enclosed within a larger package.

WARNING:

Protect yourself and others.

Read and understand this information.

FUMES AND GASES can be hazardous to your health.

ARC RAYS can injure eyes and burn skin.

ELECTRIC SHOCK can kill.

- Before use, read and understand the manufacturer's instructions, Material Safety Data Sheets (MSDSs), and your employer's safety practices.
- Keep your head out of the fumes.
- Use enough ventilation, exhaust at the arc, or both, to keep fumes and gases away from your breathing zone and the general area.
- Wear correct eye, ear, and body protection.
- Do not touch electrical parts.
- See American National Standard Z49.1, *Safety in Welding, Cutting, and Allied Processes* published by the American Welding Society, 550 N.W. LeJeune Road, Miami, Florida 33126; OSHA Safety and Health Standards, *29 CFR 1910,* available from the U.S. Government Printing Office, Washington, DC 20402.

DO NOT REMOVE THIS INFORMATION

Annex
Guide to AWS Specification for Stainless Steel Electrodes for Flux Cored Arc Welding and Stainless Steel Flux Cored Rods for Gas Tungsten Arc Welding

(This Annex is not a part of A5.22-95, *Specification for Stainless Steel Electrodes for Flux Cored Arc Welding and Stainless Steel Flux Cored Rods for Gas Tungsten Arc Welding,* but is included for information purposes only.)

A1. Introduction

The purpose of this guide is to correlate the electrode and rod classifications with their intended applications so the specification can be used effectively. Reference to appropriate base metal specifications is made whenever that can be done and when it would be helpful. Such references are intended only as examples rather than complete listings of the materials for which each filler metal is suitable. This specification now includes welding rods classified as RXXXT1-5. These are flux cored welding rods which can be used for GTAW of the root pass of stainless steel pipe without the use of a back shielding gas. Previous editions of A5.22 only included flux cored welding electrodes.

A2. Classification System

A2.1 The system for identifying the electrode and rod classifications in this specification follows the standard pattern used in other AWS filler metal specifications.

A2.2 The letter "E" at the beginning of each classification designation stands for electrode, and the letter "R" indicates a welding rod. The three or four digit number such as 308 designates the chemical composition. The following letter "T" indicates that the product is a flux cored electrode or rod. The "1" or "0" following the "T" indicates the recommended position of operation. Inclusion of "K" in the designator signifies that the material has been designed for cryogenic service. Figure A1 is graphical explanation of the system.

A2.3 Since the electrodes and rods are classified according to the chemical composition of the weld metal and the external shielding medium required for the classification tests, additional symbols are employed, following the "E" or "R" in the classification designations.

A2.3.1 The chemical composition is identified by a three-digit or four-digit number, and, in some cases, additional chemical symbols and the letters "L" or "H." The numbers generally follow the pattern of the AISI numbering system for heat- and corrosion-resisting steels; however, there are exceptions. In some classifications additional chemical symbols are used to signify modifications of basic alloy types. The letter "L" denotes a low-carbon content in the deposit. The letter "H" denotes a carbon content in the upper part of the range that is specified for the corresponding standard alloy type.

A2.3.2 The letter "K" in the E316LKT0-3 classification signifies that weld metal deposited by these electrodes is designed for cryogenic applications.

A2.3.3 Following the chemical composition designation comes the letter "T," which signifies that the product is a flux cored electrode or rod. Following the "T" is a 1 or 0 indicating the recommended position of welding. Following the position indicator and a dash, are the numerals "1," "3," "4," or "5" or the letter "G." The numerals "1," "4," and "5" identify the shielding gas required for classification of the electrode or rod. The numeral "3" signifies that an external shielding gas is not employed and that the weld puddle is shielded by the atmosphere and slag generated by the flux core. The letter "G" signifies that the shielding medium, chemical composition, and mechanical properties are not specified and are as agreed upon between supplier and purchaser. For rods, the letter "G" signifies

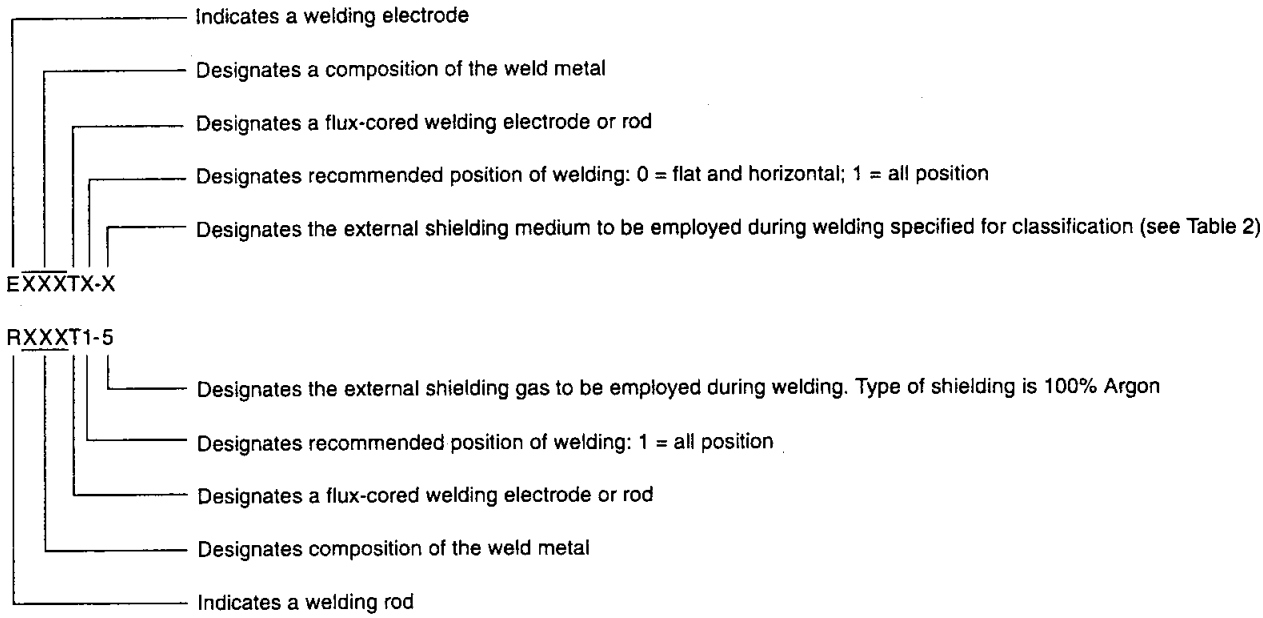

FIG. A1 CLASSIFICATION SYSTEM

that the shielding medium is not specified and is as agreed upon between the purchaser and the manufacturer. Refer to A2.3.7 for a further explanation of the "G" classification and its implications.

A2.3.4 Significance of the position indicators is summarized as follows:

(a) EXXXT0-X Designates a welding electrode designed to weld in the flat or horizontal position.

(b) EXXXT1-X Designates a welding electrode designed for welding in all positions.

(c) RXXXT1-5 Designates a welding rod designed for welding in all positions.

A2.3.5 The shielding designations, denoting shielding from the core materials as well as from any externally applied gas, are shown in Table 2. This does not exclude the use of alternate gas mixtures as agreed upon between purchaser and supplier. The use of alternate gas mixtures may have an effect on welding characteristics, deposit composition, and mechanical properties of the weld, such that classification requirements may not be met.

A2.3.6 While mechanical property tests are required for classification of the electrodes or rods in this specification (see Table 6), the classification system does not identify the test requirements.

A2.3.7 This specification includes filler metals classified EXXXTX-G. The "G" indicates that the filler metal is of a *general* classification. It is general because not all of the particular requirements specified for each of the other classifications are specified for this classification. The intent in establishing this classification is to provide a means by which filler metals that differ in one respect or another (chemical composition, for example) from all other classifications, (meaning that the composition of the filler metal, in the case of the example, does not meet the composition specified for any of the classifications in the specification) can still be classified according to the specification. The purpose is to allow a useful filler metal—one that otherwise would have to await a revision of the specification—to be classified immediately under the existing specification. This means, then, that two filler metals, each bearing the same "G" classification, may be quite different in some certain respect (chemical composition, again, for example).

A2.3.8 The point of difference (although not necessarily the amount of that difference) between filler metal of a "G" classification and filler metal of a similar classification without the "G" (or even with it, for that matter) will be readily apparent from the use of the words "not required" and "not specified" in the specification. The use of these words is as follows:

Not Specified is used in those areas of the specification that refer to the results of some particular test. It indicates that the requirements for that test are *not specified* for that particular classification.

Not Required is used in those areas of the specification that refer to the tests that must be conducted in order to classify a filler metal (or a welding material). It indicates that test is *not required* because the requirements (results) for the test have not been specified for that particular classification.

Restating the case, when a requirement is not specified, it is not necessary to conduct the corresponding test in order to classify a filler metal to that classification. When a purchaser wants the information provided by that test, in order to consider a particular product of that classification for a certain application, the purchaser will have to arrange for that information with the supplier of the product. The purchaser will have to establish with that supplier just what the testing procedure and the acceptance requirements are to be, for that test. The purchaser may want to incorporate that information (via ANSI/AWS A5.01, *Filler Metal Procurement Guidelines*) in the purchase order.

A2.3.9 Request for Filler Metal Classification

(1) When a filler metal cannot be classified according to some classification other than a "G" classification, the manufacturer may request that a classification be established for that filler metal. The manufacturer may do this by following the procedure given here. When the manufacturer elects to use the "G" classification, the Filler Metal Committee recommends that the manufacturer still request that a classification be established for that filler metal, as long as the filler metal is of commercial significance.

(2) A request to establish a new filler metal classification must be a written request and it needs to provide sufficient detail to permit the Filler Metal Committee or the Subcommittee to determine whether a new classification or the modification of an existing classification is more appropriate, and whether either is necessary to satisfy the need. The request needs to state the variables and their limits, for such a classification or modification. The request should contain some indication of the time by which completion of the new classification or modification is needed.

(3) The request should be sent to the Secretary of the Filler Metal Committee at AWS Headquarters. Upon receipt of the request, the Secretary will do the following:

(a) Assign an identifying number to the request. This number will include the date the request was received.

(b) Confirm receipt of the request and give the identification number to the person who made the request.

(c) Send a copy of the request to the Chairman of the Filler Metal Committee and the Chairman of the particular Subcommittee involved.

(d) File the original request.

(3) Add the request to the log of outstanding requests.

(4) All necessary action on each request will be completed as soon as possible. If more than 12 months lapse, the Secretary shall inform the requestor of the status of the request, with copies to the Chairman of the Committee and the Subcommittee. Requests still outstanding after 18 months shall be considered not to have been answered in a "timely manner" and the Secretary shall report these to the Chairman of the Filler Metal Committee, for the Chair's action.

(5) The Secretary shall include a copy of the log of all requests pending and those completed during the preceding year with the agenda for each Filler Metal Committee meeting. Any other publication of requests that have been completed will be at the option of the American Welding Society, as deemed appropriate.

A3. Acceptance

Acceptance of all welding materials classified under this specification is in accordance with ANSI/AWS A5.01, *Filler Metal Procurement Guidelines,* as the specification states. Any testing a purchaser requires of the supplier, for material shipped in accordance with this specification, shall be clearly stated in the purchase order, according to the provisions of ANSI/AWS A5.01.

In the absence of any such statement in the purchase order, the supplier may ship the material with whatever testing he normally conducts on material of that classification, as specified in Schedule F, Table 1, of ANSI/AWS A5.01. Testing in accordance with any other Schedule in that Table must be specifically required by the purchase order. In such cases, acceptance of the material shipped will be in accordance with those requirements.

A4. Certification

The act of placing the AWS specification and classification designations on the packaging enclosing the product, or the classification on the product itself, constitutes the supplier's (manufacturer's) certification that the product meets all of the requirements of the specification.

The only testing requirement implicit in this certification is that the manufacturer has actually conducted the tests required by the specification on material that is representative of that being shipped and that the material met the requirements of the specification. Representative material, in this case, is any production run of that classification using the same formulation. *Certification* is not to be construed to mean that tests of any kind were necessarily conducted on samples of the specific material shipped. Tests on such material may, or may not, have been conducted.

The basis for the certification required by the specification is the classification test of "representative material" cited above, and the "Manufacturer's Quality Assurance System" in ANSI/AWS A5.01, *Filler Metal Procurement Guidelines.*

A5. Ventilation During Welding

A5.1 Five major factors govern the quantity of fumes in the atmosphere to which welders and welding operators are exposed during welding:

(1) Dimensions of the space in which welding is done (with special regard to the height of the ceiling)

(2) Number of welders and welding operators working in that space

(3) Rate of evolution of fumes, gases, or dust, according to the materials and processes involved

(4) The proximity of the welders or welding operators to the fumes as they issue from the welding zone, and to the gases and dusts in the space in which they are working

(5) The ventilation provided to the space in which the welding is done

A5.2 American National Standard Z49.1, *Safety in Welding, Cutting, and Allied Processes* (published by the American Welding Society), discusses the ventilation that is required during welding and should be referred to for details. Attention is drawn particularly to the section relating to ventilation.

A6. Ferrite in Weld Deposits

A6.1 Ferrite is known to be very beneficial in reducing the tendency for cracking or fissuring in weld metals; however, it is not essential. Millions of pounds of fully austenitic weld metal have been used for years and have provided satisfactory service performance. Generally, ferrite is helpful when the welds are restrained, the joints are large, and when cracks or fissures adversely affect service performance. Ferrite increases the weld strength level. Ferrite may have a detrimental effect on corrosion resistance in some environments. It also is generally regarded as detrimental to toughness in cryogenic service, and in high-temperature service where it can transform into the brittle sigma phase.

A6.2 Ferrite can be measured on a relative scale by means of various magnetic instruments. However, work by the Subcommittee for Welding of Stainless Steel of the High Alloys Committee of the Welding Research Council (WRC) established that the lack of a standard calibration procedure resulted in a very wide spread of readings on a given specimen when measured by different laboratories. A specimen averaging 5.0 percent ferrite based on the data collected from all the laboratories was measured as low as 3.5 percent by some and as high as 8.0 percent by others. At an average of 10 percent, the spread was 7.0 to 16.0 percent. In order to substantially reduce this problem, the WRC Subcommittee published on July 1, 1972 *Calibration Procedure for Instruments to Measure the Delta Ferrite Content of Austenitic Stainless Steel Weld Metal.*[6]

In 1974, the AWS extended this procedure and prepared AWS A4.2, *Standard Procedure for Calibrating Magnetic Instruments to Measure the Delta Ferrite Content of Austenitic Steel Weld Metal.* All instruments used to measure the ferrite content of AWS classified stainless electrode products are to be traceable to the latest revision of this AWS standard.

A6.3 The WRC Subcommittee also adopted the term *Ferrite Number* (FN) to be used in place of percent ferrite, to clearly indicate that the measuring instrument was calibrated to the WRC procedure. The Ferrite Number, up to 10 FN, is to be considered equal to the percent ferrite term previously used. It represents a good average of commercial U. S. and world practice on the percent ferrite. Through the use of standard calibration procedures, differences in readings due to instrument calibration are expected to be reduced to about ±5 percent, or at the most, ±10 percent of the measured ferrite value.

A6.4 In the opinion of the WRC Subcommittee, it has been impossible, to date, to accurately determine the true absolute ferrite content of stainless steel weld metals.

A6.5 Even on undiluted pads, ferrite variations from pad to pad must be expected due to slight changes in welding and measuring variables. On a large group of pads from one heat or lot and using a standard pad welding and preparation procedure, two sigma values

[6] Welding Research Council, Three Park Avenue, New York, NY 10016

indicate that 95 percent of the tests are expected to be within a range of approximately ± 2.2 FN to about 8 FN. If different pad welding and preparation procedures are used, these variations will increase.

A6.6 Even larger variations may be encountered if the welding technique allows excessive nitrogen pickup, in which case the ferrite can be much lower than it should be. High nitrogen pickup can cause a typical 8 FN deposit to drop to 0 FN. A nitrogen pickup of 0.10 percent will typically decrease the FN by about 8.

A6.7 Plate materials tend to be balanced chemically to have an inherently lower ferrite content than matching weld metals. Weld metal diluted with plate metal will usually be somewhat lower in ferrite than the undiluted weld metal, though this does vary depending on the amount of dilution and the composition of the base metal.

A6.8 In the E300 series electrodes, many types such as E310, E320, E320LR, E330, E383, and E385 are fully austenitic.[7] The E316 group can be made with little or no ferrite when required for improved corrosion resistance in certain media, and in high temperature and cryogenic applications where ferrite can be detrimental. It also can be obtained in a higher ferrite form, usually over 4 FN, if desired. The remaining E300 series electrodes can be made in low-ferrite versions, but commercial practice usually involves ferrite control above 4 FN. Because of chemistry limits covering these grades and various manufacturing limits, most lots will be under 10 FN and are likely to go over 15 FN commercially. E16-8-2 generally is controlled at a low-ferrite level, under 5 FN. E312, E2553, and E2209 generally are quite high in ferrite, usually over 20 FN.

A6.9 When it is desired to measure ferrite content, the following procedure is recommended:

A6.9.1 The same weld pads, as detailed in 8.3, may be used to measure the ferrite level, provided the last two or three layers are prepared as described in A6.9.3 and A6.9.4. Otherwise, the pads shall be made as detailed on Fig. A1 and prepared as described in A6.9.2 through A6.9.4. The base plate may be of Type 301, 302, or 304 conforming to ASTM Specification A167 or A240, or carbon steel. If the base plate contains more than 0.03% carbon and is used for the low-carbon classifications (those with the letter "L" in the designation), then the pad shall have a minimum of four layers. This is required to assure a low-carbon weld metal deposit.

A6.9.2 The weld pad must be built to a minimum height of $\frac{1}{2}$ in. (13 mm) when using Type 301, 302, or 304 base plate. When using a carbon steel base, the weld pad must have a minimum height of $\frac{5}{8}$ in. (16 mm) to eliminate dilution effects.

A6.9.3 The pad must be welded in the flat position using multiple layers, with at least the last 2 layers deposited using stringer beads. The weld layers used for the buildup may be deposited with a weave. The amperage or wire feed speed and the arc voltage shall be as recommended by the manufacturer of the electrode. The shielding medium, polarity and welding process shall be as shown in Table 2. Each pass must be cleaned prior to depositing the next pass. The welding direction should be alternated from pass to pass. The weld stops and starts must be located at the ends of the weld buildup. Between passes, the weld pad may be cooled by quenching in water not sooner than 20 seconds after the completion of each pass. The last two layers must have a maximum interpass temperature of 300°F (150°C). The last pass must be air cooled to below 800°F (427°C) prior to quenching in water.

The weld deposit can be buildup between two copper bars laid parallel on the base plate. The spacing between the copper bars is dependent on the size of the electrode and the type or size of welding gun used. Care must be taken to make sure the arc does not impinge on the copper bars resulting in copper dilution in the weld metal.

A6.9.4 The completed weld pad must have the surface prepared so that it is smooth with all traces of weld ripple removed and must be continuous in length where measurements are to be taken. This can be accomplished by any suitable means providing the surface is not heated in excess during the machining operation (excessive heating may affect the final ferrite reading). The width of the prepared surface shall not be less than $\frac{1}{8}$ in. (3 mm).

The surface can be prepared by draw filing using a mill bastard file held on both sides of the weld with the long axis of the file perpendicular to the long axis of the weld. Files shall either be new or shall have only been used on austenitic stainless steel. Filing must be accomplished by smooth draw-filing strokes (one direction only) along the length of the weld while applying a firm downward pressure.

A6.9.5 A minimum of six ferrite readings must be taken on the filed surface along the longitudinal axis of the weld pad with an instrument calibrated in

[7] Some of the grades of electrodes listed here are not in this document, but are contained in ANSI/AWS A5.4 or ANSI/AWS A5.9.

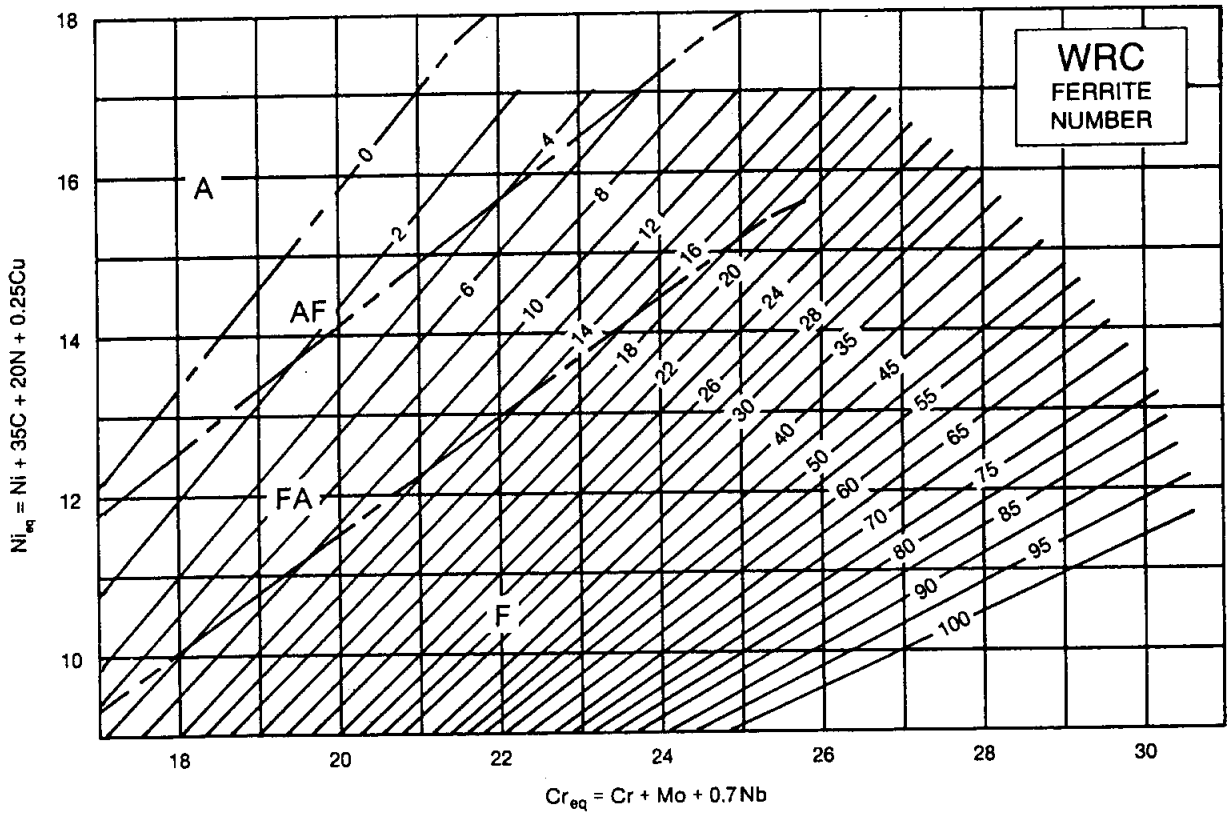

FIG. A2 WRC—WRC-1992 (FN) DIAGRAM FOR STAINLESS STEEL WELD METAL

accordance with the procedures specified in ANSI/AWS A4.2, *Standard Procedures for Calibrating Magnetic Instruments to Measure the Delta Ferrite Content of Austenitic and Duplex Austenitic-Ferritic Stainless Steel Weld Metal* (latest edition).

A6.9.6 The readings obtained must be averaged to a single value for conversion to Ferrite Number.

A6.10 The ferrite content of welds may be calculated from the chemical composition of the weld deposit. This can be done from one of several constitution diagrams; these are the WRC-1992 (Fig. A2), the Espy Diagram (Fig. A3), and the DeLong Diagram (Fig. A4). There may be a wide range of results obtained from one diagram to another. The following paragraphs give some explanation of the differences among these diagrams and their recommended applications.

A6.10.1 WRC-1992 Diagram[8] (Fig. A2) predicts ferrite in Ferrite Number (FN). This diagram is the newest of the diagrams mentioned. Studies within the WRC Subcommittee on Welding of Stainless Steel and within Commission II of the International Institute of Welding show a closer agreement between measured and predicted ferrite using this diagram than when using the DeLong Diagram. It should be noted that predictions of the WRC-1992 Diagram are independent of silicon and manganese contents because these elements were not found to have statistically significant effects. The WRC-1992 Diagram is preferred for "300" series stainless steels and for duplex stainless alloys. It may not be applicable to compositions having greater than 0.2 percent of nitrogen and greater than 10 percent of manganese.

[8] D. J. Kotecki, T. A. Siewert, "WRC-1992 Constitution Diagram for Stainless Steel Weld Metals: A Modification of the WRC-1988 Diagram." *Welding Journal* 71[5] 171s–178s (1992).

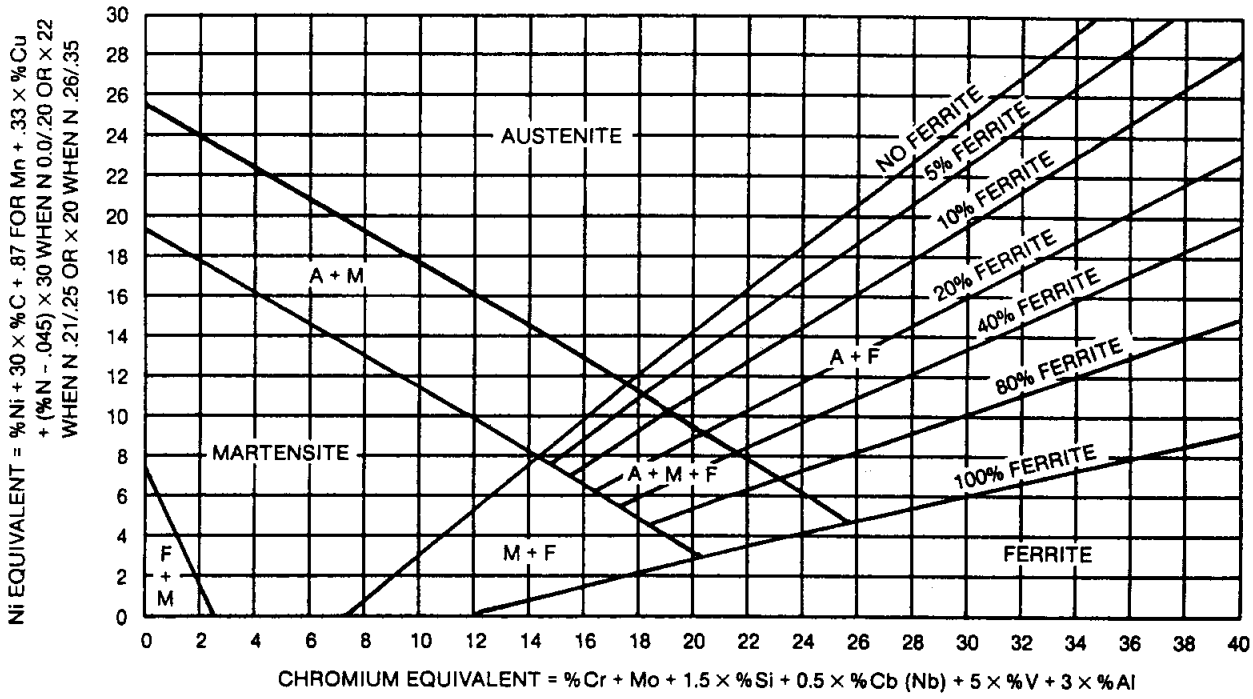

FIG. A3 ESPY PERCENT FERRITE DIAGRAM FOR STAINLESS WELD METAL

A6.10.2 Espy Diagram[9] (Fig. A3) calculates the percent ferrite rather than FN of deposits of the "200" series (see A2.1) having manganese levels up to 15 percent and nitrogen contents up 0.35 percent (i.e., nitrogen-strengthened austenitic stainless steels).

A6.10.3 DeLong Diagram[10] (Fig. A4) is a modified Schaeffler Diagram[11] predicting the Ferrite Number (FN) up to a maximum of 18 FN. The diagram includes the nitrogen level in the calculation to predict the FN. The DeLong modifications to the Schaeffler Diagram provide a better correlation between the calculated and measured ferrite content of the weld metal; therefore, the Schaeffler Diagram is not shown in this specification. The new WRC 1992 Diagram (see Fig. A2) is the most accurate and preferred diagram for predicting the ferrite in "300" series stainless steel weld metals. Future publications of this specification may not include the DeLong Diagram.

A6.10.4 The differences between measured and calculated ferrite are somewhat dependent on the ferrite level of the deposit, increasing as the ferrite level increases. The agreement between the calculated and measured ferrite values is also strongly dependent on the quality of the chemical analysis. Variations in the results of the chemical analyses encountered from laboratory to laboratory can have significant effects on the calculated ferrite value, changing it as much as 4 to 8 FN.

A7. Description and Intended Use of Electrodes and Rods

A7.1 Composition Considerations

A7.1.1 The chemical composition requirements for these electrodes and rods are patterned after those of ANSI/AWS A5.4, *Specification for Stainless Steel Electrodes for Shielded Metal Arc Welding,* and ANSI/AWS A5.9, *Specification for Bare Stainless Steel Electrodes and Rods.*

A7.1.2 The chemical composition requirements of the EXXXTX-1 and EXXXTX-4 classifications are very similar. The requirements of the EXXXT0-3 classifica-

[9] R. H. Espy, "Weldability of Nitrogen-Strengthened Stainless Steels." *Welding Journal* 61[5] 149s–156s, 1982.

[10] W. T. DeLong, 1974 Adams Lecture; "Ferrite in Austenitic Stainless Steel Weld Metal." *Welding Journal* 53[7] 273-s to 286-s (1974).

[11] A. E. Schaeffler, *Metal Progress,* 56, 680–680B.

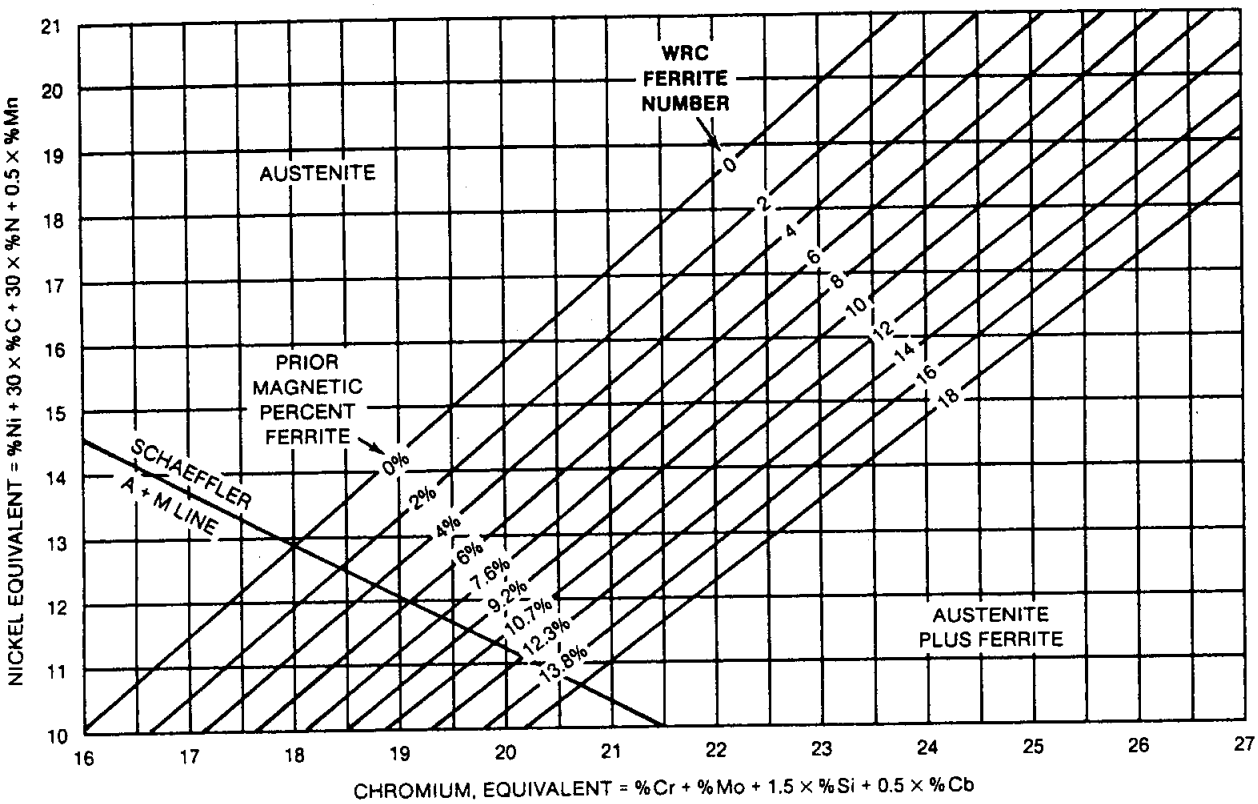

Calculate the nickel and chromium equivalents from the weld metal analysis. If nitrogen analysis of the weld metal is not available, assume 0.06% for GTA and covered electrode, or 0.08% for GMA weld metals. If the chemistry is accurate the diagram predicts the WRC Ferrite Number within plus or minus 3 in approximately 90% of the tests for the 308, 309, 316 and 317 families.

FIG. A4 DeLONG (FN) DIAGRAM FOR STAINLESS STEEL WELD METAL

tions are different from those of the previous two because self-shielding with a slag system alone is not as effective as shielding with a combination of a slag system and an external shielding gas. The EXXXT0-3 deposits, therefore, usually have a higher nitrogen content. This means that, in order to control the ferrite content of the weld metal, the chemical compositions of the EXXXT0-3 deposits must have different Cr/Ni ratios than those of EXXXTX-1 and EXXXTX-4 deposits.

Since the atmosphere generated by E316LKT0-3 electrodes more efficiently shield the arc from nitrogen pickup than that produced by other EXXXT0-3 electrodes, the Cr/Ni ratio can be the same as for EXXXTX-1 deposits without a loss of ferrite control.

A7.2 Intended Use of Electrodes and Rods

A7.2.1 E307TX-X. The nominal composition (wt.%) of this weld metal is 19 Cr, 9.7 Ni, 1.0 Mo and 4 Mn. These electrodes are used primarily for moderate strength welds with good crack resistance between dissimilar steels, such as welding austenitic manganese steel to carbon steel forgings or castings.

A7.2.2 E308TX-X. The nominal composition (wt.%) of this weld metal is 19.5 Cr and 10 Ni. Electrodes of this classification are most often used to weld base metal of similar composition such as AISI Types 301, 302, 304, 305, and 308.

A7.2.3 E308LTX-X. The composition of this weld metal is the same as that of E308TX-X, except for carbon content. By specifying low carbon in this alloy, it is possible to obtain resistance to intergranular corrosion due to carbide precipitation without the use of stabilizers such as columbium (niobium) or titanium. This low-carbon alloy, however, is not as strong at elevated temperature as the E308 and columbium (niobium)-stabilized alloys.

A7.2.4 E308HTX-X. The composition of this weld metal is the same as that of E308TX-X except for carbon content which is in the high end of the range, 0.04 to 0.08 wt.%. Carbon content in this range provides higher tensile and creep strength at elevated temperatures. These electrodes are used primarily for welding type 304H base metal.

A7.2.5 E308MoTX-X. The composition of this weld metal is the same as that of E308TX-X weld metal, except for the addition of 2–3 wt.% molybdenum. This electrode is recommended for welding CF8M stainless steel castings, as it matches the base metal with regard to chromium, nickel, and molybdenum.[12] This grade may also be used for welding wrought metals such as Type 316L when a ferrite content higher than attainable with E316LTX-X electrodes is desired.

A7.2.6 E308HMoT0-3. The composition of this weld metal is the same as that of E308MoTX-X, except that the carbon content has been restricted to the higher portion of the range. The higher carbon content provides higher strength at elevated temperatures.

A7.2.7 E308LMoTX-X. The composition of this weld metal is the same as that of E308MoTX-X weld metal, except for the lower carbon content. These electrodes are recommended for welding CF3M stainless steel castings, to match the base metal with regard to chromium, nickel, and molybdenum. This grade also may be used for welding wrought metals such as type 316L stainless when ferrite content higher than attainable with E316LTX-X electrodes is desired.

A7.2.8 E309TX-X. The nominal composition (wt.%) of this weld metal is 23.5 Cr and 13 Ni. Electrodes of this classification commonly are used for welding similar alloys in wrought or cast forms. They are used in welding dissimilar metals, such as joining Type 304 to mild steel, welding the stainless steel side of Type 304 clad steels, and applying stainless steel sheet linings to carbon steel sheets. Occasionally, they are used to weld Type 304 base metals where severe corrosion conditions exist that require higher alloy content weld metal.

A7.2.9 E309LTX-X. The composition of this weld metal is the same as E309TX-X, except for the carbon content. By specifying low carbon in this alloy, it is possible to obtain resistance to intergranular corrosion due to carbide precipitation without the use of stabilizers such as columbium (niobium) or titanium. This low carbon alloy, however, is not as strong at elevated temperature as Type 309 or the columbium (niobium)-stabilized modification. A primary application of this alloy is the first layer cladding of carbon steel if no columbium additions are required.

A7.2.10 E309MoTX-X. The composition of this weld metal is the same as that of E309TX-X weld metal, except for the addition of 2–3 wt.% of molybdenum. These electrodes are used to join stainless steel to carbon and low-alloy steels for service below 600°F (316°C), and for overlaying of carbon and low-alloy steels. The presence of molybdenum provides pitting resistance in a halide environment and helps provide high temperature ductility in dissimilar joints. The ferrite level for this electrode is approximately 18 FN.

A7.2.11 E309LMoTX-X. The composition of this weld metal is the same as E309MoTX-X weld metal, except for the lower carbon content. These electrodes are used to join stainless steel to carbon and low-alloy steels for service below 600°F (316°C), and for overlaying of carbon and low-alloy steels. The presence of molybdenum provides pitting resistance in a halide environment and helps provide high temperature ductility in dissimilar joints. The ferrite level for this electrode is approximately 20 FN.

A7.2.12 E309LNiMoTX-X. The composition of this weld metal is essentially the same as E309LMoTX-X except for the lower chromium and higher nickel content. The purpose of this modification is to achieve a lower deposit ferrite content (typically 8–12 FN) when compared to E309LMoTX-X (typically 16–20 FN). This chemistry is required by the pulp and paper industry for joining applications. The lower ferrite content leads to better corrosion resistance due to a decreased potential for chromium-nitride precipitation.

A7.2.13 E309LCbTX-X. The composition of this weld metal is the same as E309LTX-X weld metal, except for the addition of 0.7 to 1.0 wt.% of Cb (Nb). These electrodes are used to overlay carbon and low alloy steels and produce a columbium (niobium) stabilized first layer on such overlays.

A7.2.14 E310TX-X. The nominal composition (wt.%) of this weld metal is 26.5 Cr and 21 Ni. These electrodes are most often used to weld base metals of similar compositions.

A7.2.15 E312TX-X. The nominal composition (wt.%) of this weld metal is 30 Cr and 9 Ni. These electrodes most often are used to weld dissimilar metal compositions of which one component is high in nickel. This alloy gives a two-phase weld deposit with substan-

[12] CF8M and CF3M are designations of ASTM A351, *Specification for Steel Castings, Austenitic, for High Temperature Service.*

tial amounts of ferrite in an austenitic matrix. Even with considerable dilution by austenite-forming elements, such as nickel, the microstructure remains two-phase and thus highly resistant to weld metal cracks and fissures.

A7.2.16 E316TX-X. The nominal composition (wt.%) of this weld metal is 18.5 Cr, 12.5 Ni, and 2.5 Mo. Electrodes of this classification usually are used for welding similar alloys (about 2 wt.% molybdenum). These electrodes have been used successfully in applications involving special alloys for high-temperature service. The presence of molybdenum provides increased creep resistance at elevated temperatures and pitting resistance in a halide environment.

A7.2.17 E316LTX-X. The composition of this weld metal is the same as E316TX-X electrodes, except for the lower carbon content. By specifying low carbon in this alloy, it is possible to obtain resistance to intergranular corrosion due to carbide precipitation without the use of stabilizers such as columbium (niobium) or titanium. This low-carbon alloy, however, is not as strong at elevated temperatures as the columbium (niobium)-stabilized alloys.

A7.2.18 E316LKT0-3. The composition of this weld metal is the same as E316LTX-X. These electrodes, however, are "self-shielding" and are used primarily for welding stainless steels for cryogenic service. Although the nominal chromium, nickel, and molybdenum content of E316LKT0-3 filler metal is essentially the same as the other E316 grades, special attention is given to it in order to maximize low-temperature toughness. Minimizing the content of carbon and nitrogen improves the toughness. Low nitrogen content is achieved by providing a more efficient slag system than is employed with EXXXT0-3 self-shielding electrodes. Delta ferrite in the weld metal has an adverse effect on toughness; therefore, the chemical composition of the weld metal is balanced to provide a low maximum ferrite content (3 FN or less). Fully austenitic weld metal is preferred from a toughness standpoint; however, it is recognized that the tendency for weld metal fissuring is greater in fully austenitic weld metals.

A7.2.19 E317LTX-X. The nominal composition (wt.%) of this weld metal is 19.5 Cr, 13 Ni, and 3.5 Mo. These electrodes usually are used for welding alloys of similar composition and are usually limited to severe corrosion applications. Low carbon (0.03 wt.% maximum) in this filler metal reduces the possibility of intergranular carbide precipitation and thereby increases the resistance to intergranular corrosion without the use of stabilizers such as columbium or titanium. This low-carbon alloy, however, may not be so strong at elevated temperatures as the columbium (niobium) stabilized alloys or Type 317.

A7.2.20 E347TX-X. The nominal composition (wt.%) of this weld metal is 19.5 Cr and 10 Ni with Cb (Nb) added as a stabilizer. The alloy is often referred to as a stabilized Type 308 alloy, indicating that it normally is not subject to intergranular corrosion from carbide precipitation. Electrodes of this classification usually are used for welding chromium-nickel steel base metals of similar composition stabilized either with columbium (niobium) or titanium.

Although columbium (niobium) is the stabilizing element usually specified in 347 alloys, it should be recognized that tantalum also may be present. Tantalum and columbium (niobium) are almost equally effective in stabilizing carbon and in providing high-temperature strength. The usual commercial practice is to report columbium (niobium) as the sum of the columbium plus tantalum. Crack sensitivity of the weld may increase substantially, if dilution by the base metal produces a low ferrite or fully austenitic weld metal deposit.

A7.2.21 E409TX-X. The nominal composition (wt.%) of this weld metal is 12 Cr with Ti added as a stabilizer. These electrodes, which produce a ferritic microstructure, often are used to weld base metal of similar composition.

A7.2.22 E410TX-X. This 12 Cr (wt.%) alloy is an air-hardening steel and, therefore, requires preheat and postheat treatments in order to achieve welds of adequate ductility for most engineering purposes. The most common application of electrodes of this classification is for welding alloys of similar composition. They also are used for surfacing of carbon steels to resist corrosion, erosion, or abrasion, such as that which occur in valve seats and other valve parts.

A7.2.23 E410NiMoTX-X. The nominal composition (wt.%) of this weld metal is 11.5 Cr, 4.5 Ni, and 0.55 Mo. This electrode generally is used to weld CA6NM castings or similar materials.[13] These electrodes are modified to contain less chromium and more nickel to eliminate ferrite in the microstructure, as ferrite has a deleterious effect on mechanical properties. Postweld heat treatment in excess of 1150°F (620°C) may result in rehardening due to untempered martensite in the microstructure after cooling to room temperature.

[13] CA6NM is a designation of ASTM Specification A352, *Specification for Steel Castings, Ferritic and Martensitic, for Pressure Containing Parts, Suitable for Low Temperature Service.*

A7.2.24 E410NiTiTX-X. The nominal composition (wt.%) of this weld metal is 11.5 Cr and 4 Ni with Ti added as a stabilizer. These electrodes generally are used to weld base metals of similar composition.

A7.2.25 E430TX-X. This is a nominal 16.5 (wt.%) Cr alloy. The composition is balanced by providing sufficient chromium to give adequate corrosion resistance for the usual applications and yet retain sufficient ductility in the heat-treated condition. (Excessive chromium will result in lower ductility.)

Welding with E430TX-X electrodes may produce a partially hardened microstructure that requires preheating and a postweld heat treatment. Optimum mechanical properties and corrosion resistance are obtained only when the weldment is heat treated following the welding operation.

A7.2.26 E502TX-X. The nominal composition (wt.%) of this weld metal is 5 Cr and 0.55 Mo. Electrodes of this classification are used for welding base metal of similar composition, usually in the form of a pipe or tube. This alloy is air-hardening. Therefore, preheating and postweld heat treatment are strongly recommended.

A7.2.27 E505TX-X. The nominal composition (wt.%) of this weld metal is 9.2 Cr and 1.0 Mo. Electrodes of this classification are used for welding base metal of similar composition, usually in the form of a pipe or tube. The alloy is air-hardening and therefore, preheating and postweld heat treatment are strongly recommended.

A7.2.28 E2209TX-X. The nominal composition (wt.%) of this weld metal is 22 Cr, 8.5 Ni, and 3.5 Mo. This electrode is used to join duplex stainless steel base metals containing approximately 22 wt.% chromium. The microstructure of the weld deposit consists of a mixture of austenite and ferrite. Because of the two-phase structure, the alloy is one of the family of duplex stainless steel alloys. The alloy has good resistance to stress corrosion cracking and pitting corrosion attack.

A7.2.29 E2553TX-X. The nominal composition (wt.%) of this weld metal is 25.5 Cr, 9.5 Ni, and 3.4 Mo. This electrode is used to join duplex stainless steel base metals containing approximately 25 wt.% chromium. The microstructure of the weld deposit consists of a mixture of austenite and ferrite. Because of the two-phase microstructure, this alloy is one of the family of duplex stainless steel alloys. Duplex stainless steels combine high tensile and yield strengths with improved resistance to pitting corrosion and stress corrosion cracking.

A7.2.30 R308LT1-5. The nominal composition (wt.%) of this weld metal is 18.5 Cr, and 10 Ni with C held to 0.03 maximum. This flux cored rod is used primarily for root pass welding of Type 304 or 304L stainless steel piping joints when an inert gas backing purge is either not possible or not desirable. This rod can only be used with the GTA process, but caution is advised as it will produce a slag cover which must be removed before additional weld layers can be deposited. It is recommended that the manufacturer's instructions and guidelines be followed when using this rod.

A7.2.31 R309LT1-5. The nominal composition (wt.%) of this weld metal is 23.5 Cr. and 13 Ni with C held to 0.03 maximum. This flux cored filler rod is used primarily for the root pass welding of carbon steel pipe to austenitic stainless steel pipe when inert gas backing purge is either not possible or not desirable. The high Cr and Ni content allows dilution with carbon steel while still producing a weld metal with sufficient alloy to resist corrosion. This rod can only be used with the GTA process but caution is advised as it will produce a slag cover which must be removed before additional weld layers can be deposited. It is recommended that the manufacturer's instructions and guidelines be followed when using this rod.

A7.2.32 R316LT1-5. The nominal composition (wt.%) of this weld metal is 18.5 Cr, 13 Ni, and 2.5 Mo with C held to 0.03 maximum. This flux cored filler rod is used primarily for the root pass welding of Type 316 or 316L stainless steel piping joints when inert gas backing purge is either not possible or not desirable. This rod can only be used with the GTAW process but caution is advised as it will produce a slag cover which must be removed before additional weld layers can be deposited. It is recommended that the manufacturer's instructions and guidelines be followed when using this rod.

A7.2.33 R347T1-5. The nominal composition (wt.%) of this weld metal is 19.5 Cr and 10 Ni with Cb(Nb) and Ta added as stabilizers. This flux cored filler rod is used primarily for the root pass welding of Type 347 stainless steel piping joints when inert gas backing purge is either not possible or not desirable. This rod can only be used with the GTAW process but caution is advised as it will produce a slag cover which must be removed before additional weld layers can be deposited. It is recommended that the manufactur-

er's instructions and guidelines be followed when using this rod.

A8. Special Tests

A8.1 Mechanical Properties. It is recognized that supplementary tests may be required for certain applications. In such cases, tests to determine specific properties such as strength at elevated or cyrogenic temperatures may be required. ANSI/AWS A5.01 contains provisions for ordering such tests. This section is included for the guidance of those who desire to specify such special tests. Those tests may be conducted as agreed by supplier and purchaser.

Tests of joint specimens may be desired when the intended application involves the welding of dissimilar metals. Procedures for the mechanical testing of such joints should be in accordance with ANSI/AWS B4.0. Tests of joint specimens may be influenced by the properties of the base metal and may not provide adequate tests of the weld metal. Such tests should be considered as tests for qualifying the electrodes or rods. Where fabrication codes require testing welds in heat-treated conditions other than those specified in Table 6, all-weld-metal tests of heat-treated specimens may be desired. For the preparation of such specimens the procedures outlined in 8.4 should be used.

A8.2 Corrosion or Scaling Tests. Although welds made with electrodes or rods covered by this specification commonly are used in corrosion-or heat-resisting applications, it is not practical to require tests for corrosion or scale resistance on welds or weld metal specimens. Such special tests pertinent to the intended application may be conducted as agreed upon between the manufacturer and the purchaser. This section is included for the guidance of those who desire such special tests.

A8.2.1 Corrosion or scaling tests of joining specimens have the advantage that the joint design and welding procedure can be made identical to those being used in fabrication. However the user must be aware that these are tests of the combined properties of the weld metal, the heat-affected zone of the base metal, and the unaffected base metal. It is difficult to obtain reproducible data when a difference exists between the corrosion or oxidation rates of the various metal structures (weld metal, heat-affected zone, and unaffected base metal). Test samples cannot be readily standardized if welding procedure and joint design are to be considered variables. Joint specimens for corrosion tests should not be used for qualifying the electrode procedures.

A8.2.2 All-weld-metal specimens for testing corrosion or scale resistance are prepared by following the procedure outlined for the preparation of pads for chemical analysis (see Section 9). The pad size should be at least $\frac{3}{4}$ in. (19 mm) in height by $2\frac{1}{2}$ in. (65 mm) wide by 1 + n$\frac{5}{8}$ in. (25 + n16 mm) long, where "n" represents the number of specimens required from the pad. Specimens measuring $\frac{1}{2} \times 2 \times \frac{1}{4}$ in. (13 × 50 × 6.4 mm) are machined from the top surface of the pad in such a way that the 2 in. (50 mm) dimension of the specimen is parallel to the $2\frac{1}{2}$ in. (65 mm) width dimension of the pad and the $\frac{1}{2}$ in. (13 mm) dimension is parallel to the length of the pad.

A8.2.3 The heat treatments, surface finish, and marking of the specimens prior to testing should be in accordance with standard practices for tests of similar alloys in the wrought or cast forms. The testing procedure should correspond to the ASTM G4, *Standard Method for Conducting Corrosion Tests in Plant Equipment,* or ASTM A262, *Standard Practices for Detecting Susceptibility to Intergranular Attack in Austenitic Stainless Steels.*

A9. Safety Considerations

A9.1 Burn Protection. Molten metal, sparks, slag, and hot work surfaces are produced by welding, cutting, and allied processes. These can cause burns if precautionary measures are not used. Workers should wear protective clothing made of fire-resistant material. Pant cuffs, open pockets, or other places on clothing that can catch and retain molten metal or sparks should not be worn. High-top shoes or leather leggings and fire-resistant gloves should be worn. Pant legs should be worn over the outside of high-top shoes. Helmets or hand shields that provide protection for the face, neck, and ears, and a covering to protect the head should be used. In addition, appropriate eye protection should be used.

When welding overhead or in confined spaces, ear plugs to prevent weld spatter from entering the ear canal should be worn in combination with goggles, or the equivalent, to give added eye protection. Clothing should be kept free of grease and oil. Combustible materials should not be carried in pockets. If any combustible substance has been spilled on clothing, a change to clean, fire-resistant clothing should be made before working with open arcs or flames. Aprons, cape sleeves, leggings, and shoulder covers with bibs designed for welding service should be used. Where welding or cutting of unusually thick base metal is involved, sheet metal shields should be used for extra

protection. Mechanization of highly hazardous processes or jobs should be considered.

Other personnel in the work area should be protected by the use of noncombustible screens or by the use of appropriate protection as described in the previous paragraph. Before leaving a work area, hot work pieces should be marked to alert other persons of this hazard. No attempt should be made to repair or disconnect electrical equipment when it is under load; disconnection under load produces arcing of the contacts and may cause burns or shock, or both. (Note: Burns can be caused by touching hot equipment such as electrode holders, tips, and nozzles. Therefore, insulated gloves should be worn when these items are handled, unless an adequate cooling period has been allowed before touching.)

The following references are for more detailed information on personal protection:

(1) American National Standards Institute. ANSI/ASC Z87.1, *Practice for Occupational and Educational Eye and Face Protection.* New York: American National Standards Institute.

(2) American National Standards Institute. ANSI/ASC Z41.1, *Safety-Toe Footwear.* New York: American National Standards Institute.

(3) American Welding Society. ANSI/ASC Z49.1, *Safety in Welding, Cutting, and Allied Processes.* Miami, FL: American Welding Society.

(4) OSHA, *Code of Federal Regulations,* Title 29—Labor, Chapter XVII, Part 1910. Washington, D.C.: U. S. Government Printing Office.[14]

A9.2 Electrical Hazards. Electric shock can kill. However, it can be avoided. Live electrical parts should not be touched. The manufacturer's instructions and recommended safe practices should be read and understood. Faulty installation, improper grounding, and incorrect operation and maintenance of electrical equipment are all sources of danger.

All electrical equipment and workpieces should be grounded. The workpiece lead is not a ground lead; it is used only to complete the welding circuit. A separate connection is required to ground the workpiece.

The correct cable size should be used since sustained overloading will cause cable failure and can result in possible electrical shock or fire hazard. All electrical connections should be tight, clean, and dry. Poor connections can overheat and even melt. Further, they can produce dangerous arcs and sparks. Water, grease, or dirt should not be allowed to accumulate on plugs, sockets, or electrical units. Moisture can conduct electricity.

To prevent shock, the work area, equipment, and clothing should be kept dry at all times. Welders should wear dry gloves and rubber-soled shoes, or stand on a dry board or insulated platform. Cables and connections should be kept in good condition. Improper or worn electrical connections may create conditions that could cause electrical shock or short circuits. Worn, damaged, or bare cables should not be used. Open circuit voltage should be avoided. When several welders are working with arcs of different polarities, or when a number of alternating current machines are being used, the open circuit voltages can be additive. The added voltages increase the severity of the shock hazard.

In case of electric shock, the power should be turned OFF. If the rescuer must resort to pulling the victim from the live contact, nonconducting materials should be used. If the victim is not breathing, cardiopulmonary resuscitation (CPR) should be administered as soon as contact with the electrical source is broken. A physician should be called and CPR continued until breathing has been restored, or until a physician has arrived. Electrical burns are treated as thermal burns; that is, clean, cold (iced) compresses should be applied. Contamination should be avoided; the area should be covered with a clean, dry dressing; and the patient should be transported to medical assistance.

Recognized safety standards such as ANSI/ASC Z49.1, *Safety in Welding, Cutting, and Allied Processes* and NFPA No. 70, *The National Electrical Code* should be followed.[15]

A9.3 Fumes and Gases. Many welding, cutting, and allied processes produce fumes and gases which may be harmful to health. Fumes are solid particles which originate from welding filler metals and fluxes, the base metal, and any coatings present on the base metal. Gases are produced during the welding process or may be produced by the effects of process radiation on the surrounding environment. Management, welders, and other personnel should be aware of the effects of these fumes and gases. The amount and composition of these fumes and gases depend upon the composition of the filler metal and base metal, welding process, current level, arc length, and other factors.

The possible effects of overexposure range from irritation of eyes, skin, and respiratory system to more severe complications. Effects may occur immediately or at some later time. Fumes can cause symptoms such

[14] OSHA standards may be obtained from the U. S. Government Printing Office, Washington, D.C. 20402.

[15] NFPA documents are available from the National Fire Protection Association, Batterymarch Park, Quincy, MA 02269.

as nausea, headaches, dizziness, and metal fume fever. The possibility of more serious health effects exists when especially toxic materials are involved. In confined spaces, the shielding gases and fumes might displace breathing air and cause asphyxiation. One's head should always be kept out of the fumes. Sufficient ventilation, exhaust at the arc, or both, should be used to keep fumes and gases from your breathing zone and the general area.

In some cases, natural air movement will provide enough ventilation. Where ventilation may be questionable, air sampling should be used to determine if corrective measures should be applied.

More detailed information on fumes and gases produced by the various welding processes may be found in the following:

(1) The permissible exposure limits required by OSHA can be found in *Code of Federal Regulations,* Title 29—Labor, Chapter XVII, Part 1910.

(2) The recommended threshold limit values for these fumes and gases may be found in *Threshold Limit Values for Chemical Substances and Physical Agents in the Workroom Environment* published by the American Conference of Governmental Industrial Hygienists (ACGIH).[16]

(3) The results of an AWS-funded study are available in a report entitled, *Fumes and Gases in the Welding Environment.*

A9.4 Radiation. Welding, cutting, and allied operations may produce radiant energy (radiation) harmful to health. One should become acquainted with the effects of this radiant energy.

Radiant energy may be ionizing (such as x-rays), or nonionizing (such as ultraviolet, visible light, or infrared). Radiation can produce a variety of effects such as skin burns and eye damage, depending on the radiant energy's wavelength and intensity, if excessive exposure occurs.

A9.4.1 Ionizing Radiation. Ionizing radiation is produced by the electron beam welding process. It is ordinarily controlled within acceptance limits by use of suitable shielding enclosing the welding area.

A9.4.2 Nonionizing Radiation. The intensity and wavelengths of nonionizing radiant energy produced depend on many factors, such as the process, welding parameters, electrode and base-metal composition, fluxes, and any coating or plating on the base metal. Some processes such as resistance welding and cold pressure welding ordinarily produce negligible quantities of radiant energy. However, most arc welding and cutting processes (except submerged arc when used properly), laser welding and torch welding, cutting, brazing, or soldering can produce quantities of nonionizing radiation such that precautionary measures are necessary.

Protection from possible harmful effects caused by non-ionizing radiant energy from welding include the following measures:

(1) One should not look at welding arcs except through welding filter plates which meet the requirements of ANSI/ASC Z87.1, *Practice for Occupational and Educational Eye and Face Protection.* It should be noted that transparent welding curtains are not intended as welding filter plates, but rather are intended to protect a passerby from incidental exposure.

(2) Exposed skin should be protected with adequate gloves and clothing as specified in ANSI/ASC Z49.1, *Safety in Welding, Cutting, and Allied Processes.*

(3) Reflections from welding arcs should be avoided, and all personnel should be protected from intense reflections. (Note: Paints using pigments of substantially zinc oxide or titanium dioxide have a lower reflectance for ultraviolet radiation.)

(4) Screens, curtains, or adequate distance from aisles, walkways, etc., should be used to avoid exposing passersby to welding operations.

(5) Safety glasses with UV protective side shields have been shown to provide some beneficial protection from ultraviolet radiation produced by welding arcs.

A9.4.3 Ionizing radiation information sources include the following:

(1) American Welding Society. AWS F2.1-78, *Recommended Safe Practices for Electron Beam Welding and Cutting.* Miami, FL: American Welding Society.

(2) Manufacturer's product information literature.

A9.4.4 Nonionizing radiation information sources include:

(1) American National Standards Institute. ANSI/ASC Z136.1, *Safe Use of Lasers.* New York: American National Standards Institute.

(2) American National Standards Institute. ANSI/ASC Z87.1, *Practice for Occupational and Educational Eye and Face Protection.* New York: American National Standards Institute.

(3) American Welding Society. ANSI/ASC Z49.1, *Safety in Welding, Cutting, and Allied Processes.* Miami, FL: American Welding Society.

[16] ACGIH documents are available from the American Conference of Governmental Industrial Hygienists, Kemper Woods Center, 1330 Kemper Meadow Drive, Cincinnati, OH 45240.

(4) Hinrichs, J. F. "Project Committee on Radiation-Summary Report." *Welding Journal* 57 (January 1978):62–65.

(5) Marshall, W. J., Sliney, D. H., and others. "Optical Radiation Levels Produced by Air-Carbon Arc Cutting Processes." *Welding Journal* 59 (March 1980):43–46.

(6) Moss, C. E. and Murray, W. E. "Optical Radiation Levels Produced in Gas Welding, Torch Brazing, and Oxygen Cutting." *Welding Journal* 58 (September 1979):37–46.

(7) Moss, C. E. "Optical Radiation Transmission Levels Through Transparent Welding Curtains." *Welding Journal* 58 (March 1979):69s–75s.

(8) National Technical Information Service. Non-Ionizing Radiation Protection Special Study No. 42-0053-77, *Evaluation of the Potential Hazards from Actinic Ultraviolet Radiation Generated by Electric Welding and Cutting Arcs.* Springfield, VA: National Technical Information Service.[17]

(9) National Technical Information Service. Non-Ionizing Radiation Protection Special Study No. 42-0312-77, *Evaluation of the Potential Retina Hazards from Optical Radiation Generated by Electrical Welding and Cutting Arcs.* Springfield, VA: National Technical Information Service.

[17] National Technical Information documents are available from the National Technical Information Service, Springfield, VA 22161.

SPECIFICATION FOR LOW-ALLOY STEEL ELECTRODES AND FLUXES FOR SUBMERGED ARC WELDING

SFA-5.23

(Identical with AWS Specification A5.23/A5.23M-97.)

1. Scope

This specification prescribes requirements for the classification of low-alloy steel electrodes (both solid and composite) and fluxes for submerged arc welding.

This document is the first of the A5.23 specifications which is a combined specification providing for classification utilizing a system based upon U.S. Customary Units, or utilizing a system based upon the International System of Units (SI). The measurements are not exact equivalents; therefore, each system must be used independently of the other, without combining values in any way. In selecting rational metric units, ANSI/AWS A1.1, *Metric Practice Guide for the Welding Industry*, is used where suitable. Tables and figures make use of both U.S. Customary Units and SI Units which, with the application of the specified tolerances, provides for interchangeability of products in both U.S. Customary and SI Units.

(a) Paragraphs, tables, and figures which carry the suffix letter "U" are applicable only to those products classified to the system based upon U.S. Customary Units under the A5.23 specification.

(b) Paragraphs, tables, and figures which carry the suffix letter "M" are applicable only to those products classified to the system based upon the International System of Units (SI), under the A5.23M specification.

(c) Paragraphs, tables, and figures which do not have either the suffix letter "U" or the suffix letter "M" are applicable to those products classified under either the U.S. Customary Units System or the International System of Units (SI).

PART A — GENERAL REQUIREMENTS

2. Normative References

2.1 The following ANSI/AWS[1] standards are referenced in the mandatory sections of this document:

(a) ANSI/AWS A1.1, *Metric Practice Guide for the Welding Industry*

(b) ANSI/AWS A4.3, *Standard Methods for Determination of the Diffusible Hydrogen Content of Martensitic, Bainitic, and Ferritic Steel Weld Metal Produced by Arc Welding*

(c) ANSI/AWS A5.01, *Filler Metal Procurement Guidelines*

(d) ANSI/AWS A5.1, *Specification for Carbon Steel Electrodes for Shielded Metal Arc Welding*

(e) ANSI/AWS B4.0, *Standard Methods for Mechanical Testing of Welds*

2.2 The following ASTM standards[2] are referenced in the mandatory sections of this document:

(a) ASTM A 36/A 36M, *Specification for Carbon Structural Steel*

(b) ASTM A 203/A 203M, *Specification for Pressure Vessel Plates, Alloy Steel, Nickel*

(c) ASTM A 204/A 204M, *Specification for Pressure Vessel Plates, Alloy Steel, Molybdenum*

[1] AWS standards may be obtained from the American Welding Society, 550 N.W. LeJeune Road, Miami, FL 33126.

[2] ASTM standards can be obtained from ASTM, 100 Barr Harbor Drive, West Conshohocken, PA 19428-2959.

(d) ASTM A 285/A 285M, *Specification for Pressure Vessel Plates, Carbon Steel, Low- and Intermediate-Tensile Strength*

(e) ASTM A 302/A 302M, *Specification for Pressure Vessel Plates, Alloy Steel, Manganese-Molybdenum and Manganese-Molybdenum-Nickel*

(f) ASTM A 387/A 387M, *Specification for Pressure Vessel Plates, Alloy Steel, Chromium-Molybdenum*

(g) ASTM A 514/A 514M, *Specification for High-Yield-Strength, Quenched and Tempered Alloy Steel Plate, Suitable for Welding*

(h) ASTM A 515/A 515M, *Specification for Pressure Vessel Plates, Carbon Steel, for Intermediate- and Higher-Temperature Service*

(i) ASTM A 516/A 516M, *Specification for Pressure Vessel Plates, Carbon Steel, for Moderate- and Lower-Temperature Service*

(j) ASTM A 517/A 517M, *Specification for Pressure Vessel Plates, Alloy Steel, High-Strength, Quenched and Tempered*

(k) ASTM A 533/A 533M, *Specification for Pressure Vessel Plates, Alloy Steel, Quenched and Tempered, Manganese-Molybdenum and Manganese-Molybdenum-Nickel*

(l) ASTM A 537/A 537M, *Specification for Pressure Vessel Plates, Heat-Treated, Carbon-Manganese-Silicon Steel*

(m) ASTM A 543/A 543M, *Specification for Pressure Vessel Plates, Alloy Steel, Quenched and Tempered Nickel-Chromium-Molybdenum*

(n) ASTM A 572/A 572M, *Specification for High-Strength Low-Alloy Columbium-Vanadium Structural Steel*

(o) ASTM A 588/A 588M, *Specification for High-Strength Low-Alloy Structural Steel with 50 ksi [345 MPa] Minimum Yield Point to 4 in. [100 mm] Thick*

(p) ASTM DS-56, SAE HS-1086, *Metals and Alloys in the Unified Numbering System*

(q) ASTM E 29, *Practice for Using Significant Digits in Test Data to Determine Conformance with Specifications*

(r) ASTM E 142, *Method for Controlling Quality of Radiographic Testing*

(s) ASTM E 350, *Test Methods for Chemical Analysis of Carbon Steel, Low Alloy Steel, Silicon Electrical Steel, Ingot Iron and Wrought Iron*

2.3 The following ISO standard[3] is referenced in the mandatory section of this document.

(a) ISO 864, *Arc Welding — Solid and Tubular Cored Wires Which Deposit Carbon and Carbon Manganese Steel — Dimensions of Wires, Spools, Rims and Coils.*

3. Classification

3.1U The welding electrodes and fluxes covered by the A5.23 specification utilize a classification system based upon U.S. Customary Units and are classified according to the following:

(a) The mechanical properties of the weld metal obtained with the combination of a particular flux and a particular classification of electrode, as specified in Tables 6U and 7U

(b) The condition of heat treatment in which those properties are obtained, as specified in 9.4 (and shown in Fig. 1U)

(c) The chemical composition of the weld metal obtained with the combination of a particular flux and a particular classification of electrode as specified in Table 2

(d) The chemical composition of the electrode (for solid electrodes) as specified in Table 1 or the weld metal produced with a particular flux (for composite electrodes) as specified in Table 2

3.1M The welding electrodes and fluxes covered by the A5.23M specification utilize a classification system based upon the International System of Units (SI), according to the following:

(a) The mechanical properties of the weld metal obtained with the combination of a particular flux and a particular classification of electrode, as specified in Tables 6M and 7M

(b) The condition of heat treatment in which those properties are obtained, as specified in 9.4 (and shown in Fig. 1M)

(c) The chemical composition of the weld metal obtained with the combination of a particular flux and a particular classification of electrode as specified in Table 2

(d) The chemical composition of the electrode (for solid electrodes) as specified in Table 1 or the weld metal produced with a particular flux (for composite electrodes) as specified in Table 2

3.2 Solid electrodes classified under one classification shall not be classified under any other classification in this specification. Composite electrodes may be classified under more than one classification when used with different fluxes. Fluxes may be classified under any number of classifications, for weld metal in either or both the as-welded and postweld heat-treated conditions,

[3] ISO standards may be obtained from The American National Standards Institute (ANSI), 11 West 42nd Street, 13th Floor, New York, NY 10036-8002

MANDATORY CLASSIFICATION DESIGNATORS[a]

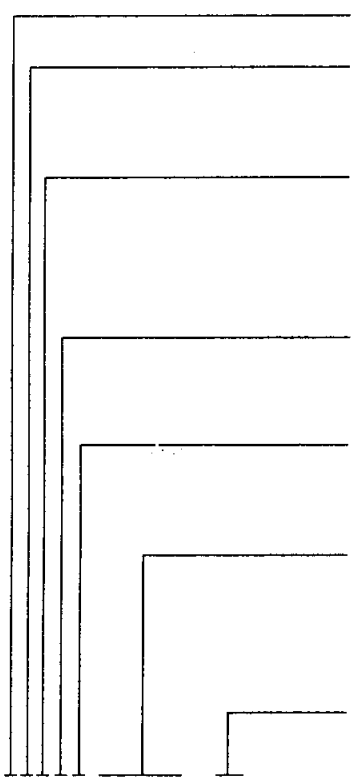

Indicates a submerged arc welding flux.

Indicates that the welding flux being classified is made solely from crushed slag or is a blend of crushed slag with unused (virgin) flux. Omission of the "S" indicates that the flux being classified is unused (virgin) flux.

Indicates the minimum tensile strength (in increments of 10 000 psi) of weld metal deposited with the flux and some specific classification of electrode under the welding conditions specified in Figure 3. Two digits are used for weld metal of 100 000 psi tensile strength and higher. For example, when the designator is 8, the tensile requirement is 80 000 to 100 000 psi. When the designator is 11, the tensile requirement is 110 000 to 130 000 psi (see Table 6U).

Designates the condition of heat treatment in which the tests were conducted: "A" for as-welded and "P" for postweld heat treated. The time and temperature of the PWHT are specified in 9.4 and Table 5.

Indicates a temperature in °F at or above which the impact strength of the weld metal referred to above meets or exceeds 20 ft·lbf. Two digits are used for test temperatures of –100°F or lower (see Table 7U).

Classification of the electrode used in producing the weld metal referred to above. The letter "E" in the first position indicates electrode. The letter "C," when present in the second position, indicates that the electrode is a composite electrode (refer to Table 2 for classifications). Omission of the "C" indicates that the electrode is a solid electrode (refer to Table 1 for classifications).

Indicates the chemical composition of the weld metal obtained with the flux and the electrode. One or more letters and/or digits are used (see Table 2).

OPTIONAL SUPPLEMENTAL DESIGNATORS[b]

Optional supplemental diffusible hydrogen designator (see Table 8).

An "N" designator indicates conformance to special requirements for nuclear applications. The "N" is used only when footnote c to Table 1 or footnote e to Table 2 applies (see Paragraph 13.4 and Annex A2.1 for explanation).

An "R" designator indicates conformance to reduced residual requirements for step cooling applications. The "R" is used only when footnote g to Table 1 or Table 2 applies.

Notes:
(a) The combination of these designators constitutes the flux-electrode classification.
(b) These designators are optional and do not constitute a part of the flux-electrode classification.

Examples

F9P0-EB3-B3 is a complete designation for a flux-electrode combination. It refers to a flux that will produce weld metal which, in the postweld heat treated condition, will have a tensile strength of 90 000 to 110 000 psi and Charpy V-notch impact strength of at least 20 ft·lbf at 0°F when produced with an EB3 electrode under the conditions called for in this specification. The absence of an "S" in the second position indicates that the flux being classified is a virgin flux. The composition of the weld metal will be B3 (see Table 2).

F9A2-ECM1-M1 is a complete designation for a flux-electrode combination when the trade name of the composite electrode used in classification tests is indicated as well [see 17.4.1(3)]. The designation refers to a virgin flux that will produce weld metal with the ECM1 electrode which, in the as-welded condition, will have a tensile strength of 90 000 to 110 000 psi and Charpy V-notch energy of at least 20 ft·lbf at –20°F under the conditions called for in this specification. The composition of the weld metal will be M1 (see Table 2).

FIG. 1U A5.23 CLASSIFICATION SYSTEM FOR U.S. CUSTOMARY UNITS

MANDATORY CLASSIFICATION DESIGNATORS[a]

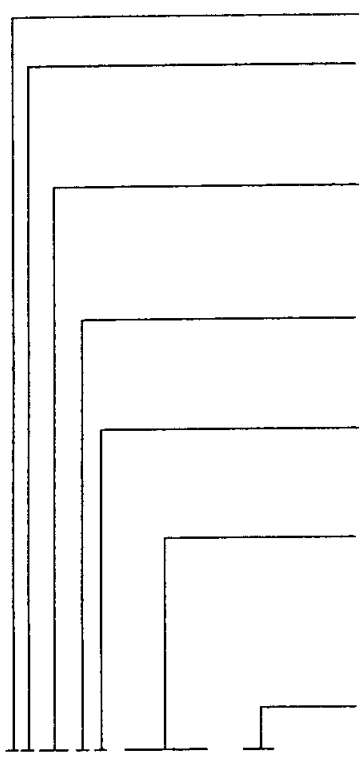

Indicates a submerged arc welding flux.

Indicates that the welding flux being classified is made solely from crushed slag or is a blend of crushed slag with unused (virgin) flux. Omission of the "S" indicates that the flux being classified is unused (virgin) flux.

Indicates the minimum tensile strength [in increments of 10 Megapascals (MPa)] of weld metal deposited with the flux and some specific classification of electrode under the welding conditions specified in Figure 3. For example, when this designator is 55, the tensile requirement is 550 to 700 MPa (see Table 6M).

Designates the condition of heat treatment in which the tests were conducted: "A" for as-welded and "P" for postweld heat treated. The time and temperature of the PWHT are specified in 9.4 and Table 5.

Indicates a temperature in °C at or above which the impact strength of the weld metal referred to above meets or exceeds 27J. Two digits (10) are used for test temperatures of –100°C (See Table 7M).

Classification of the electrode used in producing the weld metal referred to above. The letter "E" in the first position indicates electrode. The letter "C," when present in the second position, indicates that the electrode is a composite electrode (refer to Table 2 for classifications). Omission of the "C" indicates that the electrode is a solid electrode (refer to Table 1 for classifications).

Indicates the chemical composition of the weld metal obtained with the flux and the electrode. One or more letters and/or digits are used (see Table 2).

OPTIONAL SUPPLEMENTAL DESIGNATORS[b]

Optional supplemental diffusible hydrogen designator (see Table 8).

An "N" designator indicates conformance to special requirements for nuclear applications. The "N" is used only when footnote c to Table 1 or footnote e to Table 2 applies (see Paragraph 13.4 and Annex A2.1 for explanation.)

An "R" designator indicates conformance to reduced residual requirements for step cooling applications. The "R" is used only when footnote g to Table 1 or Table 2 applies.

Notes:
(a) The combination of these designators constitutes the flux-electrode classification.
(b) These designators are optional and do not constitute a part of the flux-electrode classification.

Examples

F62P2-EB3-B3 is a complete designation for a flux-electrode combination. It refers to a flux that will produce weld metal which, in the postweld heat treated condition, will have a tensile strength of 620–760 MPa and Charpy V-notch impact strength of at least 27J at –20°C when produced with an EB3 electrode under the conditions called for in this specification. The absence of an "S" in the second position indicates that the flux being classified is a virgin flux. The composition of the weld metal will be B3 (see Table 2).

F69A3-ECM2-M2 is a complete designation for a flux-electrode combination when the trade name of the composite electrode used in classification tests is indicated as well [see 17.4.1 (3)]. The designation refers to a virgin flux that will produce weld metal with the ECM2 electrode which, in the as-welded condition, will have a tensile strength of 690–830 MPa and Charpy V-notch energy of at least 27J at –30°C under the conditions called for in this specification. The composition of the weld metal will be M2 (see Table 2).

FIG. 1M A5.23M CLASSIFICATION SYSTEM FOR THE INTERNATIONAL SYSTEM OF UNITS (SI)

TABLE 1
CHEMICAL COMPOSITION REQUIREMENTS FOR SOLID ELECTRODES

AWS Classification[3]	UNS Number[4]	Wt. Percent[1] [2]										
		C	Mn	Si	S	P	Cr	Ni	Mo	Cu[5]	V	Other
EL12[6]	K01012	0.04–0.14	0.25–0.60	0.10	0.030	0.030	...	...	...	0.35	...	...
EM12K[6]	K01113	0.05–0.15	0.80–1.25	0.10–1.35	0.030	0.030	...	...	...	0.35	...	...
EA1	K11222	0.05–0.17	0.65–1.00	0.20	0.025	0.025	...	...	0.45–0.65	0.35	...	...
EA2	K11223	0.05–0.17	0.95–1.35	0.20	0.025	0.025	...	...	0.45–0.65	0.35	...	...
EA3	K11423	0.05–0.17	1.65–2.20	0.20	0.025	0.025	...	...	0.45–0.65	0.35	...	...
EA3K	K21451	0.05–0.12	1.60–2.10	0.50–0.80	0.025	0.025	...	...	0.40–0.60	0.35	...	...
EA4	K11424	0.05–0.17	1.20–1.70	0.20	0.025	0.025	...	...	0.45–0.65	0.35	...	...
EB1	K11043	0.10	0.40–0.80	0.05–0.30	0.025	0.025	0.40–0.75	...	0.45–0.65	0.35	...	...
EB2[7]	K11172	0.07–0.15	0.45–1.00	0.05–0.30	0.025	0.025	1.00–1.75	...	0.45–0.65	0.35	...	...
EB2H	K23016	0.28–0.33	0.45–0.65	0.55–0.75	0.015	0.015	1.00–1.50	...	0.40–0.65	0.30	0.20–0.30	...
EB3[7]	K31115	0.05–0.15	0.40–0.80	0.05–0.30	0.025	0.025	2.25–3.00	...	0.90–1.10	0.35	...	...
EB5	K12187	0.15–0.23	0.40–0.70	0.40–0.60	0.025	0.025	0.45–0.65	...	0.90–1.20	0.30	...	...
EB6	S50280	0.10	0.35–0.70	0.05–0.50	0.025	0.025	4.50–6.50	...	0.45–0.70	0.35	...	...
EB6H	S50180	0.25–0.40	0.75–1.00	0.25–0.50	0.025	0.025	4.80–6.00	...	0.45–0.65	0.35	...	...
EB8	S50480	0.10	0.30–0.65	0.05–0.50	0.025	0.025	8.00–10.50	...	0.80–1.20	0.35	...	...
EB9	S50482	0.07–0.13	1.25	0.30	0.010	0.010	8.00–10.00	1.00	0.80–1.10	0.10	0.15–0.25	Nb(Cb): 0.02–0.10 N: 0.03–0.07 Al: 0.04
ENi1	K11040	0.12	0.75–1.25	0.05–0.30	0.020	0.020	0.15	0.75–1.25	0.30	0.35	...	...
ENi1K	K11058	0.12	0.80–1.40	0.40–0.80	0.020	0.020	...	0.75–1.25	...	0.35	...	...
ENi2	K21010	0.12	0.75–1.25	0.05–0.30	0.020	0.020	...	2.10–2.90	...	0.35	...	...
ENi3	K31310	0.13	0.60–1.20	0.05–0.30	0.020	0.020	0.15	3.10–3.80	...	0.35	...	...
ENi4	K11485	0.12–0.19	0.60–1.00	0.10–0.30	0.020	0.015	...	1.60–2.10	0.10–0.30	0.35	...	...
ENi5	K11240	0.12	1.20–1.60	0.05–0.30	0.020	0.020	...	0.75–1.25	0.10–0.30	0.35	...	...
EF1	K11160	0.07–0.15	0.90–1.70	0.15–0.35	0.025	0.025	...	0.95–1.60	0.25–0.55	0.35	...	...
EF2	K21450	0.10–0.18	1.70–2.40	0.20	0.025	0.025	...	0.40–0.80	0.40–0.65	0.35	...	...
EF3	K21485	0.10–0.18	1.70–2.40	0.30	0.025	0.025	...	0.70–1.10	0.40–0.65	0.35	...	...
EF4	K12048	0.16–0.23	0.60–0.90	0.15–0.35	0.030	0.025	0.40–0.60	0.40–0.80	0.15–0.30	0.35	...	...
EF5	K41370	0.10–0.17	1.70–2.20	0.20	0.015	0.010	0.25–0.50	2.30–2.80	0.45–0.65	0.50	...	...
EF6	K21135	0.07–0.15	1.45–1.90	0.10–0.30	0.015	0.015	0.20–0.55	1.75–2.25	0.40–0.65	0.35	...	...
EM2[8]	K10882	0.10	1.25–1.80	0.20–0.60	0.015	0.010	0.30	1.40–2.10	0.25–0.55	0.25	0.05	Ti: 0.10 Zr: 0.10 Al: 0.10

TABLE 1 (CONT'D)
CHEMICAL COMPOSITION REQUIREMENTS FOR SOLID ELECTRODES

AWS Classification[3]	UNS Number[4]	Wt. Percent[1] [2]										
		C	Mn	Si	S	P	Cr	Ni	Mo	Cu[5]	V	Other
EM3[8]	K21015	0.10	1.40–1.80	0.20–0.60	0.015	0.010	0.55	1.90–2.60	0.25–0.65	0.25	0.04	Ti: 0.10 Zr: 0.10 Al: 0.10
EM4[8]	K21030	0.10	1.40–1.80	0.20–0.60	0.015	0.010	0.60	2.00–2.80	0.30–0.65	0.25	0.03	Ti: 0.10 Zr: 0.10 Al: 0.10
EW	K11245	0.12	0.35–0.65	0.20–0.35	0.030	0.025	0.50–0.80	0.40–0.80	...	0.30–0.80	...	...
EG	---------- Not Specified ----------											

NOTES:
(1) The electrode shall be analyzed for the specific elements for which values are shown in this table. If the presence of other elements is indicated, in the course of this work, the amount of those elements shall be determined to ensure that their total (excluding iron) does not exceed 0.50 percent.
(2) Single values are maximum.
(3) The letter "N" when added as a suffix is an optional supplemental designator indicating that the limits on the phosphorus, vanadium, and copper, as follows:

P = 0.012% max. V = 0.05% max. Cu = 0.08% max.

See A2.1 for explanation and intended use.
(4) SAE/ASTM Unified Numbering System for Metals and Alloys.
(5) The copper limit includes any copper coating that may be applied to the electrode.
(6) The EL12 and EM12K classifications are identical to those same classifications in ANSI/AWS A5.17/A5.17M, *Specification for Carbon Steel Electrodes and Fluxes for Submerged Arc Welding.* They are included in this specification because they are sometimes used with an alloy flux to deposit some of the weld metals classified in Table 2.
(7) The letter "R" when added as a suffix is an optional supplemental designator indicating that the limits on sulfur, phosphorus, copper, arsenic, tin and antimony are as follows:

S = 0.010% max. P = 0.010% max. Cu = 0.15% max. As = 0.005% max. Sn = 0.005% max. Sb = 0.005% max.

See A7.1.2 for explanation and intended use.
(8) The composition ranges of classifications with the "EM" prefix are intended to conform to the ranges for similar electrodes in the military specifications.

using different electrode classifications. Flux-electrode combinations may be classified under A5.23 with U.S. Customary Units, A5.23M using the International System of Units (SI), or both. Flux-electrode combinations classified under both A5.23 and A5.23M must meet all requirements for classification under each system. The classification systems are shown in Figs. 1U and 1M.

3.3 The electrodes and fluxes classified under this specification are intended for submerged are welding, but that is not to prohibit their use with any other process for which they are found suitable.

4. Acceptance

Acceptance of the electrodes and fluxes shall be in accordance with the provisions of ANSI/AWS A5.01, *Filler Metal Procurement Guidelines* (see Annex A3).

5. Certification

By affixing the AWS specification and classification designations to the packaging, or the classification to the product, the manufacturer certifies that the product meets the requirements of this specification (see Annex A4).

6. Units of Measure and Rounding-Off Procedure

6.1 This specification makes use of both U.S. Customary Units and the International System of Units (SI). The measurements are not exact equivalents; therefore, each system must be used independently of the other without combining in any way. The specification with the designation A5.23 uses U.S. Customary Units. The specification with the designation A5.23M uses SI Units.

TABLE 2
CHEMICAL COMPOSITION REQUIREMENTS FOR WELD METAL (BOTH FLUX-SOLID ELECTRODE AND FLUX-COMPOSITE ELECTRODE COMBINATIONS)

Weld Metal Designation[4] [5]	UNS Number[6]	Wt. Percent[1] [2] [3]									
		C	Mn	Si	S	P	Cr	Ni	Mo	Cu	Other
A1	W17041	0.12	1.00	0.80	0.030	0.030	...	...	0.40–0.65	0.35	...
A2	W17042	0.12	1.40	0.80	0.030	0.030	...	...	0.40–0.65	0.35	...
A3	W17043	0.15	2.10	0.80	0.030	0.030	...	...	0.40–0.65	0.35	...
A4	W17044	0.15	1.60	0.80	0.030	0.030	...	...	0.40–0.65	0.35	...
B1	W51040	0.12	1.60	0.80	0.030	0.030	0.40–0.65	...	0.40–0.65	0.35	...
B2[7]	W52040	0.05–0.15	1.20	0.80	0.030	0.030	1.00–1.50	...	0.40–0.65	0.35	...
B2H	W52240	0.10–0.25	1.20	0.80	0.020	0.020	1.00–1.50	...	0.40–0.65	0.35	V: 0.30
B3[7]	W53040	0.05–0.15	1.20	0.80	0.030	0.030	2.00–2.50	...	0.90–1.20	0.35	...
B4	W53340	0.12	1.20	0.80	0.030	0.030	1.75–2.25	...	0.40–0.65	0.35	...
B5	W51340	0.18	1.20	0.80	0.030	0.030	0.40–0.65	...	0.90–1.20	0.35	...
B6	W50240	0.12	1.20	0.80	0.030	0.030	4.50–6.00	...	0.40–0.65	0.35	...
B6H	W50140	0.10–0.25	1.20	0.80	0.030	0.030	4.50–6.00	...	0.40–0.65	0.35	...
B8	W50440	0.12	1.20	0.80	0.030	0.030	8.00–10.00	...	0.80–1.20	0.35	...
B9	W50442	0.07–0.13	1.25	0.15–0.30	0.010	0.010	8.00–9.50	1.00	0.80–1.20	0.10	Al: 0.04 Nb: 0.03–0.10 N: 0.03–0.07 V: 0.15–0.25
Ni1	W21040	0.12	1.60[8]	0.80	0.025	0.030	0.15	0.75–1.10	0.35	0.35	Ti+V+Zr: 0.05
Ni2	W22040	0.12	1.60[8]	0.80	0.025	0.030	...	2.00–2.90	...	0.35	...
Ni3	W23040	0.12	1.60	0.80	0.025	0.030	0.15	2.80–3.80	...	0.35	...
Ni4	W21250	0.14	1.60	0.80	0.025	0.030	...	1.40–2.10	0.10–0.35	0.35	...
Ni5	W21042	0.12	1.60	0.80	0.025	0.030	...	0.70–1.10	0.10–0.35	0.35	...
F1	W21150	0.12	0.70–1.50	0.80	0.030	0.030	0.15	0.90–1.70	0.55	0.35	...
F2	W20240	0.17	1.25–2.25	0.80	0.030	0.030	...	0.40–0.80	0.40–0.65	0.35	...
F3	W21140	0.17	1.25–2.25	0.80	0.030	0.030	...	0.70–1.10	0.40–0.65	0.35	...
F4	W20440	0.17	1.60	0.80	0.035	0.030	0.60	0.40–0.80	0.25	0.35	Ti+V+Zr: 0.03
F5	W22540	0.17	1.20–1.80	0.80	0.020	0.020	0.65	2.00–2.80	0.30–0.80	0.50	...
F6	W22640	0.14	0.80–1.85	0.80	0.020	0.030	0.65	1.50–2.25	0.60	0.40	...
M1	W21240	0.10	0.60–1.60	0.80	0.030	0.030	0.15	1.25–2.00	0.35	0.30	Ti+V+Zr: 0.03
M2	W21340	0.10	0.90–1.80	0.80	0.020	0.020	0.35	1.40–2.10	0.25–0.65	0.30	Ti+V+Zr: 0.03
M3	W22240	0.10	0.90–1.80	0.80	0.020	0.020	0.65	1.80–2.60	0.20–0.70	0.30	Ti+V+Zr: 0.03
M4	W22440	0.10	1.30–2.25	0.80	0.020	0.020	0.80	2.00–2.80	0.30–0.80	0.30	Ti+V+Zr: 0.03

TABLE 2 (CONT'D)
CHEMICAL COMPOSITION REQUIREMENTS FOR WELD METAL (BOTH FLUX-SOLID ELECTRODE AND FLUX-COMPOSITE ELECTRODE COMBINATIONS)

Weld Metal Designation[4] [5]	UNS Number[6]	Wt. Percent[1] [2] [3]									
		C	Mn	Si	S	P	Cr	Ni	Mo	Cu	Other
M5	W21345	0.12	1.60–2.50	0.50	0.015	0.015	0.40	1.40–2.10	0.20–0.50	0.30	Ti: 0.03 V: 0.02 Zr: 0.02
M6	W21346	0.12	1.60–2.50	0.50	0.015	0.015	0.40	1.40–2.10	0.70–1.00	0.30	Ti: 0.03 V: 0.02 Zr: 0.02
W	W21040	0.12	0.50–1.60	0.80	0.030	0.035	0.45–0.70	0.40–0.80	...	0.30–0.75	...
G	---------- Not Specified ----------										

NOTES:
(1) The weld metal shall be analyzed for the specific elements for which values are shown in this table. If the presence of other elements is indicated, in the course of this work, the amount of those elements shall be determined to ensure that their total (excluding iron) does not exceed 0.50 percent.
(2) Single values are maximum.
(3) As a substitute for the weld pad in Figure 2, the sample for chemical analysis may be taken from the reduced section of the fractured tension test specimen (see 12.1) or from a corresponding location (or any location above it) in the weld metal in the groove weld in Figure 3. In case of dispute, the weld pad shall be the referee method.
(4) The electrode designation for composite electrodes is obtained by placing an "EC" before the appropriate weld metal designation.
(5) The letter "N" when added as a suffix is an optional supplemental designator indicating that the limits on the phosphorus, vanadium, and copper as follows:

P = 0.012% max. V = 0.05% max. Cu = 0.08% max.

See A2.1 for explanation and intended use.
(6) SAE/ASTM Unified Numbering System for Metal and Alloys.
(7) The letter "R" when added as a suffix is an optional supplemental designator indicating that the limits on sulfur, phosphorus, copper, arsenic, tin and antimony are as follows:

S = 0.010% max. P = 0.010% max. Cu = 0.15% max. As = 0.005% max. Sn = 0.005% max. Sb = 0.005% max.

These reduced residual limits are necessary to meet "X" factor requirements for step cooling applications.
(8) Manganese in Ni1 and Ni2 designated weld metal may be 1.80% maximum when carbon is restricted to 0.10% maximum.

The latter are shown in appropriate columns in the Tables or figures or are shown within brackets [] when used in the text. Figures in parenthesis (), following the U.S. Customary Units, are calculated equivalent SI values for the specified dimensions. Figures in brackets [ ], following U.S. Customary Units used in the text, are rational SI Units.

6.2 For the purpose of determining conformance with this specification, an observed or calculated value shall be rounded to the nearest 1000 psi for tensile and yield strength for A5.23 [to the nearest 10 MPa for tensile and yield strength for A5.23M] and to the nearest unit in the last right-hand place of figures used in expressing the limiting values for other quantities in accordance with the rounding-off method given in ASTM E 29, *Practice for Using Significant Digits in Test Data to Determine Conformance with Specifications.*

PART B — TESTS, PROCEDURES, AND REQUIREMENTS

7. Summary of Tests

The tests required for classification of solid electrodes, composite electrodes, and flux-electrode combinations are specified in Table 3.

7.1 Electrodes

7.1.1 Solid Electrodes. Chemical analysis of the electrode is the only test required for classification of a solid electrode under this specification. The chemical

TABLE 3
TESTS REQUIRED FOR CLASSIFICATION

AWS Classification	Chemical Analysis		Radiographic Test	Tension Test	Impact Test	Diffusible Hydrogen Test
	Electrode	Weld Metal				
All Solid Electrodes	Required	Not Req'd	Not Req'd	Not Req'd	Not Req'd	Not Req'd
All Composite Electrodes	Not Req'd	Required	Not Req'd	Not Req'd	Not Req'd	Not Req'd
All Flux-Solid Electrode Combinations	Not Req'd	Required	Required	Required	Required(1)	(2)
All Flux-Composite Electrode Combinations	Not Req'd	Required	Required	Required	Required(1)	(2)

NOTES:
(1) When the "Z" impact designator (no impact requirement — Tables 7 and 7M) is used, the Impact Test is not required.
(2) Diffusible hydrogen test is required only when specified by the purchaser and when the manufacturer puts the diffusible hydrogen designator on the label. (See also A3 and A6.4 in the Annex).

analysis of the rod stock from which the electrode is made may also be used, provided the electrode manufacturing process does not alter the chemical composition.

7.1.2 Composite Electrodes. Chemical analysis of weld metal produced with the composite electrode and a particular flux is the only test required for classification of a composite electrode under this specification.

7.2 Fluxes. The tests specified in Table 3 determine the chemical composition, the mechanical properties, and the soundness of the weld metal obtained with a particular flux-electrode combination. The base metal for the weld test assemblies, the welding and testing procedures to be employed, and the results required are given in Sections 9 through 13.

7.3 Flux classification is based upon a $^{5}/_{32}$-in. [4.0-mm] electrode size as standard. If this size electrode is not manufactured, the closest size shall be used for classification tests. See Note (d) of Fig. 3B.

8. Retest

If the results of any test fail to meet the requirement, that test shall be repeated twice. The results of both retests shall meet the requirement. Material, specimens, or samples for retest may be taken from the original test assembly or sample or from one or two new test assemblies or samples. For chemical analysis, retest need be only for those specific elements that failed to meet the test requirement. If the results of one or both retests fail to meet the requirement, the material under test shall be considered as not meeting the requirements of this specification for that classification.

In the event that, during preparation or after completion of any test, it is clearly determined that prescribed or proper procedures were not followed in preparing the weld test assembly or test specimen(s) or in conducting the test, the test shall be considered invalid, without regard to whether the test was actually completed or whether test results met, or failed to meet, the requirement. That test shall be repeated, following proper prescribed procedures. In this case, the requirement for doubling the number of test specimens does not apply.

9. Weld Test Assemblies

9.1 Requirements for Classification

9.1.1 Classification of Solid Electrodes. No weld test assembly is required for classification of solid electrodes.

9.1.2 Classification of Composite Electrodes. The chemical analysis of weld metal produced with the composite electrode and a particular flux is required for classification of a composite electrode under this specification. The weld test assembly, shown in Fig. 2, is used to meet this requirement for the classification of composite electrodes. Figure 2 is the weld pad test assembly for chemical analysis of weld metal. As an alternative to the weld pad, the sample for chemical analysis of composite electrode weld metal may be taken from the groove weld in Fig. 3A. Note (3) to Table 2 allows the sample for chemical analysis in the case of a composite electrode to be taken from the

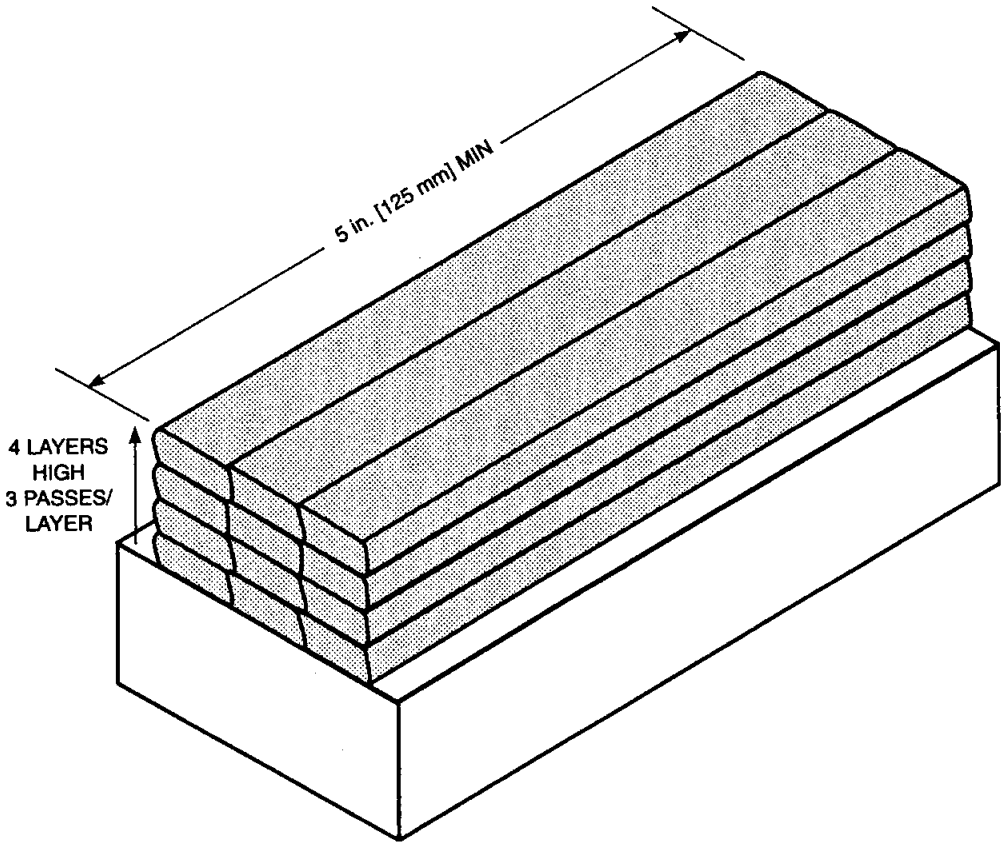

NOTES:
(1) Width and thickness of the base metal plate may be any dimension suitable for the electrode diameter and current in use.
(2) Weld beads shall be deposited without oscillation. The welding conditions shall be in accordance with the manufactured recommendations.
(3) The first and last 2 in. [50 mm] of the weld length shall be discarded. The top surface shall be removed, and chemical analysis samples shall be taken from the underlying metal of the fourth layer of the weld pad.

FIG. 2 WELD PAD FOR CHEMICAL ANALYSIS OF WELD METAL

reduced section of the fractured tension test specimen or from a corresponding location (or any location above it) in the weld metal in the groove weld in Fig. 3A. In case of dispute, the weld pad shall be the referee method.

9.1.3 Classification of Flux-Electrode Combinations. One groove weld test assembly is required for each classification of a flux-solid electrode combination or a flux-composite electrode combination. This is the groove weld in Fig. 3A for mechanical properties and soundness of the weld metal.

A second test assembly, the weld pad in Fig. 2, is required for chemical analysis of the weld metal. However, Note (3) to Table 2 allows the sample for chemical analysis to be taken from the reduced section of the fractured tension test specimen or from a corresponding location (or any location above it) in the weld metal in the groove weld in Fig. 3A, thereby avoiding the need to make the weld pad. In case of dispute, the weld pad shall be the referee method.

9.2 Preparation. Preparation of each weld test assembly shall be as prescribed in 9.3 and 9.4. The base metal for each assembly shall be as required in Table 4 corresponding to the tests to be conducted and shall meet the requirements of the appropriate ASTM specification shown there, or an equivalent specification. Testing of the assemblies shall be as prescribed in Sections 10 through 13.

9.3 Weld Pad. For composite electrodes or for any flux-electrode combination, a weld pad shall be prepared as specified in Fig. 2, except when the alternative in 9.1.2 or 9.1.3 is selected. Base metal of any convenient size, of the type specified in Table 4, shall be used

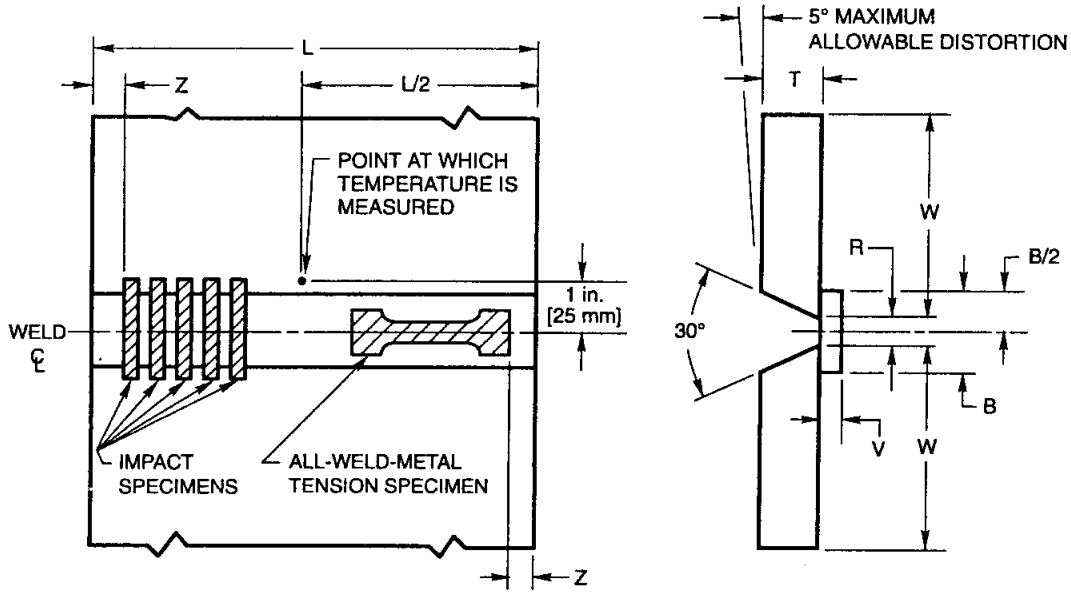

(A) JOINT CONFIGURATION AND LOCATION OF TEST SPECIMENS

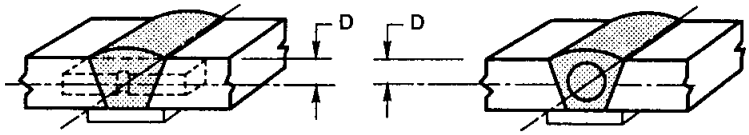

(B) LOCATION OF IMPACT TEST SPECIMENS

(C) LOCATION OF ALL-WELD-METAL TENSION TEST SPECIMEN

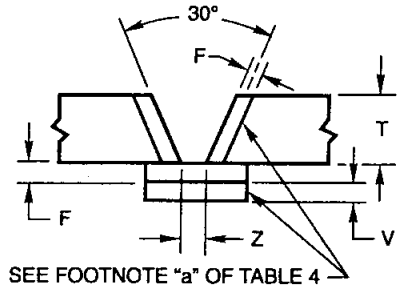

(D) BUTTERED GROOVE

LETTER	DIMENSIONS	in.	mm
L	Length (min)	12	305
T	Thickness	1 ± 1/16	25 ± 1.5
W	Width (min)	5	127
D	Specimen Center	3/8 ± 1/32	9.5 ± 1.0
B	Backup Width (min)	2	50
R	Root Opening	1/2 ± 1/16	13 ± 1.5
Z	Discard (min)	1	25
V	Backup Thickness:		
	Without buttering (min)	1/2	13
	With buttering (min)	3/8	9.5
F	Buttering Thickness (min)	1/8	3.2

FIG. 3A GROOVE WELD TEST ASSEMBLY

Welding Conditions for Solid Electrodes[a,b,c]										
Electrode Size[d]		Welding Current (Amperes)[f]	Arc Voltage (Volts)	Electrode Extension[g]		Travel Speed		Current Type[h]	Preheat Temp.[i]	Interpass Temp.[i]
in.	mm[e]			in.	mm	ipm (±1)	mm/sec (±0.5)			
1/16	1.6	250 to 350	26 to 29	1/2 to 3/4	13 to 19	12	5.0	A.C. or D.C. either polarity	Refer to Table 5	Refer to Table 5
5/64	2.0	300 to 400	26 to 29	1/2 to 3/4	13 to 19	13	5.5			
3/32	2.4	350 to 450	27 to 30	3/4 to 1-1/4	19 to 32	14	6.0			
—	2.5	350 to 450	27 to 30	3/4 to 1-1/4	19 to 32	14	6.0			
7/64	2.8	400 to 500	27 to 30	3/4 to 1-1/4	19 to 32	14	6.0			
—	3.0	400 to 500	27 to 30	1 to 1-1/2	25 to 38	15	6.5			
1/8	3.2	425 to 525	27 to 30	1 to 1-1/2	25 to 38	15	6.5			
5/32	4.0	475 to 575	27 to 30	1 to 1-1/2	25 to 38	16	7.0			
3/16	4.8	525 to 625	27 to 30	1 to 1-1/2	25 to 38	17	7.0			
—	5.0	550 to 650	27 to 30	1 to 1-1/2	25 to 38	17	7.0			
7/32	5.6	575 to 675	28 to 31	1-1/4 to 1-3/4	32 to 44	18	7.5			
—	6.0	625 to 725	28 to 31	1-1/4 to 1-3/4	32 to 44	19	8.0			
1/4	6.4	700 to 800	28 to 32	1-1/2 to 2	38 to 50	20	8.5			

NOTES:
(a) Values specified in inches or ipm apply to A5.23. Values specified in mm or mm/sec. apply to A5.23M.
(b) These welding conditions are intended for machine or automatic welding with straight progression (no weaving). Welding shall be performed in the flat position. The first layer shall be produced in either 1 or 2 passes. All other layers shall be produced in 2 or 3 passes per layer except the last, which shall be produced in 3 or 4 passes. The completed weld shall be at least flush with the surface of the test plate.
(c) Welding conditions for composite electrodes shall be as agreed between purchaser and supplier.
(d) Classification is based on the properties of weld metal with $^{5}/_{32}$ in. [4.0 mm] electrodes or the closest size manufactured, if $^{5}/_{32}$ in. [4.0 mm] is not manufactured. The conditions given above for sizes other than $^{5}/_{32}$ in. [4.0 mm] are to be used when classification is based on those sizes, or when they are required for lot acceptance testing under A5.01, *Filler Metal Procurement Guidelines* (unless other conditions are specified by the purchaser).
(e) 4.8 mm, 5.6 mm and 6.4 mm are not included as standard sizes in ISO 864:1988.
(f) Lower currents may be used for the first layer.
(g) The electrode extension is the contact tube-to-work distance. When an electrode manufacturer recommends a contact tube-to-work distance outside the range shown, that recommendation shall be followed ±1/4 in. [6.5 mm].
(h) In the case of dispute, DCEP (direct current electrode positive) shall be used as the referee current.
(i) The welding of any pass may begin only when the assembly is within the interpass temperature range. The point of temperature measurement shall be at the mid-length of the test assembly, approximately 1 in. [25 mm] from the weld centerline.

FIG. 3B GROOVE WELD TEST WELDING PARAMETERS

as the base metal for the weld pad. The surface of the base metal on which the filler metal is deposited shall be clean. The pad shall be welded in the flat position, three passes per layer, four layers high, using the flux for which classification of the composite electrode or flux-electrode combination is intended. The preheat temperature shall be not less than 60°F [15°C], and the interpass temperature shall not exceed 325°F [165°C]. The slag shall be removed after each pass. The pad may be quenched in water between passes but shall be dry before the start of each pass. Testing of this assembly shall be as specified in Section 10, Chemical Analysis.

9.4 Groove Weld for Mechanical Properties and Soundness. For classification of a flux-electrode combination, a test assembly shall be prepared and welded as specified in Fig. 3A, using base metal of the appropriate type specified in Table 4, and the preheat and interpass temperature specified in Table 5. Prior to welding, the assembly may be preset so that the welded joint will be sufficiently flat to facilitate removal of the test specimens. As an alternative, restraint or a combination of restraint and presetting may be used to keep the welded joint within 5 degrees of plane. A welded test assembly that is more than 5 degrees out of plane shall be discarded. Straightening of the test assembly is prohibited. Testing of this assembly shall be as specified in Sections 10 through 13, with the assembly in either the as-welded or the postweld heat-treated condition, according to the classification of the weld metal (see Fig. 1U or Fig. 1M).

When the tests are to be conducted in each condition (as-welded and postweld heat treated), two such assemblies, or one single assembly of sufficient length to provide the specimens required for both conditions, shall be prepared. In the latter case, the single assembly

TABLE 4
BASE METAL FOR TEST ASSEMBLIES

Weld Metal Designation	Base Metal ASTM Standard[1] [2]	Base Metal UNS Number[3]
A1, A2, A3, A4	A204 Grade A	K11820
B2 and B2H	A387 Grade 11	K11789
B3	A387 Grade 22	K21590
B4	A387 Grade 22	K21590
B5	A387 Grade 11	K11789
B6 and B6H	A387 Grade 5	S50200
B8	A387 Grade 9	S50400
B9	A387 Grade 91	S50460
Ni1	A516 Grade 60, 65, or 70, A537 Class 1 or 2	K02100, K02403, K02700, or K12437
Ni2	A537 Class 1 or 2, or A203 Grade A or B	K12437, K21703, or K22103
Ni3	A203 Grade D or E	K31718 or K32018
Ni4 and Ni5	A537 Class 1 or 2, or A203 Grade A or B	K12437, K21703, or K22103
F1 and F4	A537 Class 1 or 2, or A533 (any type or grade in these specifications)	K12437, K12521, K12539, K12529, or K12554
F2 and F3	A302 Grade C or D, or A533 Type B, C, or D	K12039, K12054, K12539, K12529, K12554
F5 and F6	A514 or A517 (any type or grade in these specifications)	K11511, K11576, K11625, K11630, K11646, K11683, K11856, K21604, or K21650
M1, M2, M3, M4, M5, M6	A514 to A517 (any type or grade in these specifications), or A543 Type B or C	K11511, K11576, K11625, K11630, K11646, K11683, K11856, K21604, K21650, or K42339
W	A572 or A588 (any type or grade in these specifications)	K02303, K02304, K02305, K02306, K11430, K12040, K12043, or K11538
G	---------- Note (4) ----------	

NOTES:
(1) For any weld metal classification in this specification, ASTM A36, A285 Grade C, A515 Grade 70, or A516 Grade 70 may be used. In that case, the groove faces and the contacting face of the backing shall be buttered, as shown in Fig. 3, using a flux-electrode combination of the same weld metal composition as that specified for the combination being tested, or using an electrode of the specified composition classified in another AWS low-alloy steel filler metal specification. Alternatively, for the indicated weld metal classification, the corresponding base metals may be used for weld test assemblies without buttering. In case of dispute, buttered A36 steel shall be the referee material.
(2) Chemically equivalent steels in other U.S. customary grades or in any metric grades, whose properties are expressed in SI Units, may also be used.
(3) As classified in ASTM DS-56, SAE HS-1086, *Metals and Alloys in the Unified Numbering System.*
(4) For the "G" classification in this specification, ASTM A36, A285 Grade C, A515 Grade 70, or A516 Grade 70 may be used; however, the groove faces and the contacting face of the backing shall be buttered, as shown in Figure 3, using either the flux-electrode combination being classified or using an electrode of matching composition classified in another AWS low-alloy steel filler metal specification.

shall be cut transverse to the weld into two pieces; one of the pieces shall be tested in the as-welded condition, and the other piece shall be heat treated prior to testing.

Any test assembly to be heat treated shall be heat treated at the temperature specified in Table 5 for 1 hour (–0, +15 minutes). The furnace shall be at a temperature not higher than 600°F [315°C] when the test assembly is placed in it. The heating rate, from that point to the specified holding temperature in Table 5 shall not exceed 400°F per hour [220°C per hour]. When the one-hour holding time has been completed, the assembly shall be allowed to cool in the furnace to a temperature below 600°F [315°C] at a rate not exceeding 350°F per hour [195°C per hour]. The assembly may be removed from the furnace at any temperature below 600°F [315°C] and allowed to cool in still air to room temperature.

9.5 Diffusible Hydrogen. In those cases in which an optional supplemental diffusible hydrogen designator is to be added to the flux-electrode classification designation, four diffusible hydrogen test assemblies shall be prepared, welded, and tested as specified in Section 14, Diffusible Hydrogen Test.

10. Chemical Analysis

10.1 For solid electrodes, a sample of the electrode shall be prepared for chemical analysis. The rod stock from which the electrode is made may also be used for chemical analysis, provided the electrode manufacturing

TABLE 5
PREHEAT, INTERPASS, AND POSTWELD HEAT TREATMENT TEMPERATURES[1]

AWS Weld Metal Designation	Preheat and Interpass Temperature[2]		Postweld Heat Treatment Temperature[3]	
	°F ± 25	°C ± 15	°F ± 25	°C ± 15
A1	300	150	1150	620
A2	300	150	1150	620
A3	300	150	1150	620
A4	300	150	1150	620
B1	300	150	1150	620
B2	300	150	1275	690
B2H	300	150	1275	690
B3	400	205	1275	690
B4	400	205	1275	690
B5	300	150	1150	620
B6	400	205	1375	745
B6H	400	205	1375	745
B8	400	205	1375	745
B9	400	205	1375	745
Ni1	300	150	1150	620
Ni2	300	150	1150	620
Ni3	300	150	1150	620
Ni4	300	150	1150	620
Ni5	300	150	1150	620
F1	300	150	1150	620
F2	300	150	1150	620
F3	300	150	1150	620
F4[4]	300	150	1050	565
F5[4]	300	150	1050	565
F6[4]	300	150	1050	565
M1[4]	300	150	1125	605
M2[4]	300	150	1125	605
M3[4]	300	150	1125	605
M4[4]	300	150	1125	605
M5[4]	300	150	1125	605
M6[4]	300	150	1125	605
W[4]	300	150	1125	605
G	---------- not specified ----------			

NOTES:
(1) These temperatures are specified for electrodes and fluxes tested and classified under this specification and are not necessarily recommendations for production use. The specific requirements for production welding shall be determined by the user. They may or may not differ from those called for here. (See also A6.3).
(2) The preheat and interpass temperatures listed here shall be used for the test assemblies regardless of whether the electrode-flux combination is classified in the as-welded or postweld heat treated condition. They are required for purposes of uniformity and may or may not be indicative of those that might be satisfactory for fabrication of any particular weldment. The fabricator shall determine for himself what is required there. (See also A6.3).
(3) Weld metal specimens for flux electrode combinations classified in the postweld heat treated condition shall be heat treated for one hour at the temperature shown for each classification.
(4) These classifications normally are used in the as-welded condition.

process does not alter the chemical composition. Solid electrodes, when analyzed for elements that are present in a coating (copper flashing, for example), shall be analyzed without removing the coating. When the electrode is analyzed for elements other than those in the coating, the coating shall be removed if its presence affects the results of the analysis for other elements. Rod stock may be analyzed prior to coating for those elements not added in the coating. In this case, the analysis of the elements in the electrode coating must be made on the finished electrode.

10.2 Composite electrodes and all flux-electrode combinations shall be analyzed in the form of weld metal. The sample for analysis shall be taken from weld metal obtained with the electrode and the flux with which it is classified. The sample shall come from the weld pad in Fig. 2, from the reduced section of the fractured tension test specimen (see 12.1) or from a corresponding location (or any location above it) in the weld metal in the groove weld in Fig. 3A. In case of dispute, the weld pad shall be the referee method.

The top surface of the pad described in 9.3 and shown in Fig. 2 shall be removed and discarded, and a sample for analysis shall be obtained from the underlying metal of the fourth layer of the weld pad by any appropriate mechanical means. The sample shall be free of slag.

The alternatives to the weld pad outlined above and in 9.1.2 and 9.1.3 shall be prepared for analysis by any appropriate mechanical means.

10.3 The sample shall be analyzed by accepted analytical methods. The referee method shall be the procedure in the latest edition of ASTM E 350, *Test Methods for Chemical Analysis of Carbon Steel, Low Alloy Steel, Silicon Electrical Steel, Ingot Iron and Wrought Iron.*

10.4 The results of the analysis shall meet the requirements of Table 1 or 2, as applicable, for the classification of electrode or flux-electrode combination under test.

11. Radiographic Test

11.1 The groove weld described in 9.4 and shown in Fig. 3A shall be radiographed to evaluate the soundness of the weld metal. In preparation for radiography, the backing shall be removed and both surfaces of the weld shall be machined or ground smooth and flush with the original surfaces of the base metal. Both surfaces of the test assembly, in the area of the weld, shall be smooth enough to avoid difficulty in interpreting the radiograph.

11.2 The weld shall be radiographed in accordance with ASTM E 142, *Method for Controlling Quality of Radiographic Testing*. The quality level of inspection shall be 2-2T.

11.3 The soundness of the weld metal meets the requirements of this specification if the radiograph shows:

(a) No cracks, no incomplete fusion, and no incomplete penetration

(b) No slag inclusions longer than $^{5}/_{16}$ in. [8 mm] or no groups of slag inclusions in line that have an aggregate length greater than 1 in. [25 mm] in a 12 in. [300 mm] length, except when the distance between the successive inclusions exceeds 6 times the length of the longest inclusion in the group

(c) No rounded indications in excess of those permitted by the radiographic standards in Fig. 4.

In evaluating the radiograph, 1 in. [25 mm] of the weld on each end of the test assembly shall be disregarded.

11.3.1 A rounded indication is an indication (on the radiograph) whose length is no more than 3 times its width. Rounded indications may be circular, or irregular in shape, and they may have tails. The size of a rounded indication is the largest dimension of the indication, including any tail that may be present.

11.3.2 Indications whose largest dimension does not exceed $^{1}/_{64}$ in. [0.4 mm] shall be disregarded. Test assemblies with indications larger than the large indications permitted in the radiographic standards do not meet the requirements of this specification.

12. Tension Test

12.1 One all-weld-metal standard round tensile specimen, as specified in the Tension Tests section of ANSI/AWS B4.0, *Standard Methods for Mechanical Testing of Welds*, shall be machined from the groove weld described in 9.4 and shown in Fig. 3A. The tensile specimen shall have a nominal diameter of 0.500 in. [12.5 mm] and a nominal gage length to diameter ratio of 4:1.

For flux-electrode combinations classified in the post-weld heat-treated condition, the weld metal shall be heat-treated as shown in Table 5 before final machining of the specimen.

12.2 After machining, but before testing, the specimen for all flux-electrode classifications, except those classi-

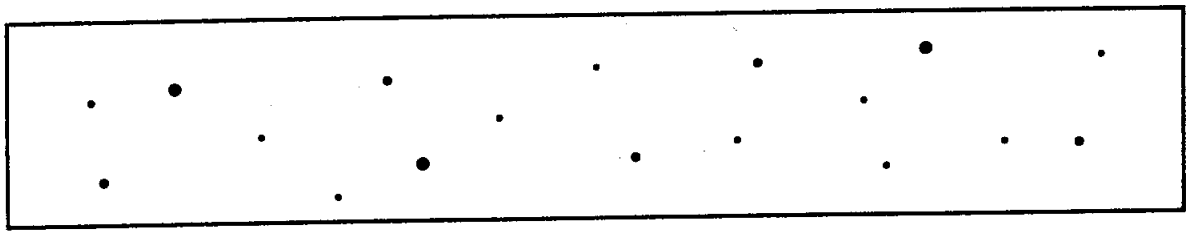

(A) ASSORTED ROUNDED INDICATIONS

SIZE PERMITTED IS 1/64 in. [0.4 mm] TO 1/16 in. [1.6 mm]
NUMBER PERMITTED IN ANY 6 in. [150 mm] OF WELD = 18,
WITH THE FOLLOWING RESTRICTIONS:

LARGE:	3/64 in. [1.2 mm] TO 1/16 in. [1.6 mm] =	3 PERMITTED.
MEDIUM:	1/32 in. [0.8 mm] TO 3/64 in. [1.2 mm] =	5 PERMITTED.
SMALL:	1/64 in. [0.4 mm] TO 1/32 in. [0.8 mm] =	10 PERMITTED.

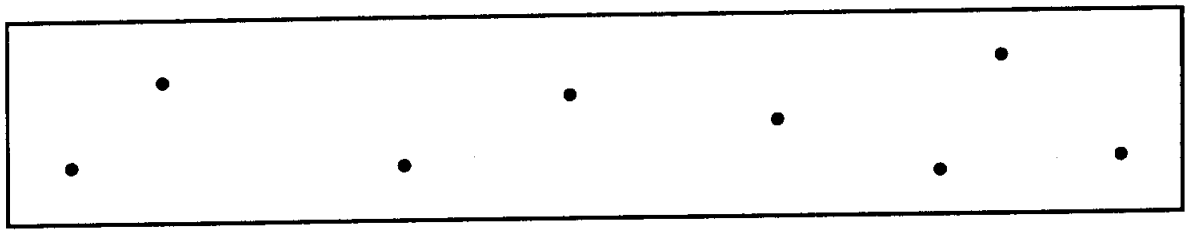

(B) LARGE ROUNDED INDICATIONS

SIZE PERMITTED IS 3/64 in. [1.2 mm] TO 1/16 in. [1.6 mm]
NUMBER PERMITTED IN ANY 6 in. [150 mm] OF WELD = 8.

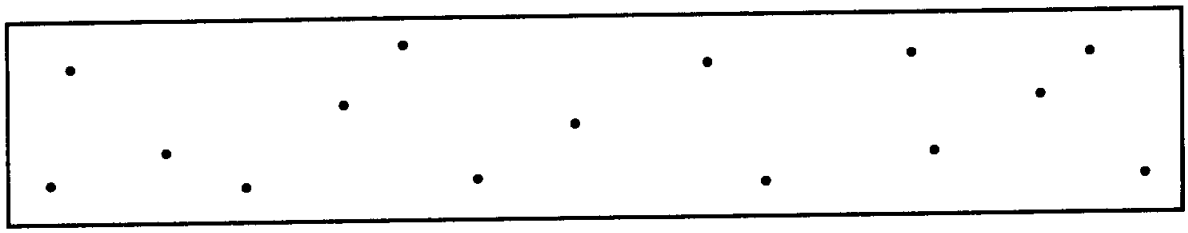

(C) MEDIUM ROUNDED INDICATIONS

SIZE PERMITTED IS 1/32 in. [0.8 mm] TO 3/64 in. [1.2 mm]
NUMBER PERMITTED IN ANY 6 in. [150 mm] OF WELD = 15.

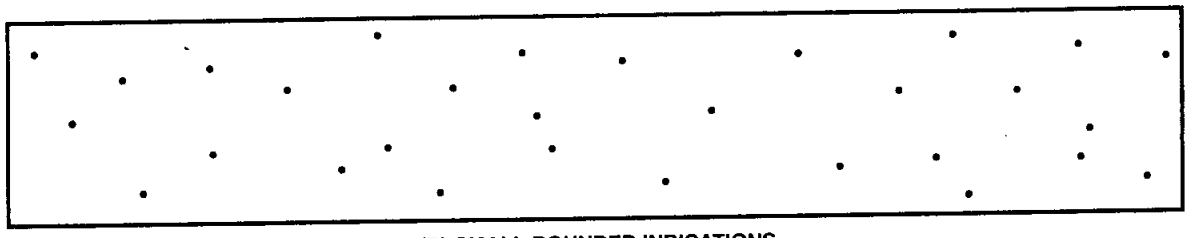

(D) SMALL ROUNDED INDICATIONS

SIZE PERMITTED IS 1/64 in. [0.4 mm] TO 1/32 in. [0.8 mm]
NUMBER PERMITTED IN ANY 6 in. [150 mm] OF WELD = 30.

NOTES:
(1) The chart which is most representative of the size of the rounded indications in the radiograph of the test assembly shall be used for determination of conformance with this specification. Rounded indications smaller than $^{1}/_{64}$ in. [0.4 mm] shall be disregarded. The largest dimension of the indication (including any tail) is the size of the indication.
(2) These radiographic requirements are for test welds made in the laboratory specifically for classification purposes. They are more restrictive than those usually encountered in general fabrication. They are equivalent to the Grade 1 standards of ANSI/AWS A5.1, *Specification for Carbon Steel Electrodes for Shielded Metal Arc Welding.*

FIG. 4 RADIOGRAPHIC STANDARDS FOR ROUNDED INDICATIONS

TABLE 6U
A5.23 TENSION TEST REQUIREMENTS

Flux-Electrode Classification[1]	Tensile Strength (psi)	Yield Strength[2] (psi)	Elongation[2] (%)
F7XX-EXX-XX	70 000–95 000	58 000	22
F8XX-EXX-XX	80 000–100 000	68 000	20
F9XX-EXX-XX	90 000–110 000	78 000	17
F10XX-EXX-XX	100 000–120 000	88 000	16
F11XX-EXX-XX	110 000–130 000	98 000	15[3]
F12XX-EXX-XX	120 000–140 000	108 000	14[3]

NOTES:
(1) The letter "S" will appear after the "F" as part of the classification designation when the flux being classified is a crushed slag or a blend of crushed slag with unused (virgin) flux. The letter "C" will appear after the "E" as part of the classification designation when the electrode being classified is a composite electrode. The letter "X" used in various places in the classification in this table stands for, respectively, the condition of heat treatment, the toughness of the weld metal, the classification of the electrode, and the chemical composition of the weld metal. See Figure 1U for a complete explanation of the classification designators.
(2) Minimum requirements. Yield strength at 0.2 percent offset and elongation in 2 in. gage length.
(3) Elongation may be reduced by one percentage point for F11XX-EXX-XX, F11XX-ECXX-XX, F12XX-ECXX-XX, and F12XX-EXX-XX weld metals in the upper 25 percent of their tensile strength range.

TABLE 6M
A5.23M TENSION TEST REQUIREMENTS

Flux-Electrode Classification[1]	Tensile Strength (MPa)	Yield Strength[2] (MPa)	Elongation[2] (%)
F48XX-EXX-XX	480–660	400	22
F55XX-EXX-XX	550–700	470	20
F62XX-EXX-XX	620–760	540	17
F69XX-EXX-XX	690–830	610	16
F76XX-EXX-XX	760–900	680	15[3]
F83XX-EXX-XX	830–970	740	14[3]

NOTES:
(1) The letter "S" will appear after the "F" as part of the classification designation when the flux being classified is a crushed slag or a blend of crushed slag with unused (virgin) flux. The letter "C" will appear after the "E" as part of the classification designation when the electrode being classified is a composite electrode. The letter "X" used in various places in the classification in this table stands for, respectively, the condition of heat treatment, the toughness of the weld metal, the classification of the electrode, and the chemical composition of the weld metal. See Figure 1M for a complete explanation of the classification designators.
(2) Minimum requirements. Yield strength at 0.2 percent offset and elongation in 51 mm gage length.
(3) Elongation may be reduced by one percentage point for F76XX-EXX-XX, F76XX-ECXX-XX, F83XX-EXX-XX, and F83XX-ECXX-XX weld metals in the upper 25 percent of their tensile strength range.

fied in the postweld heat-treated condition, may be aged at temperatures up to 220°F [105°C] for up to 48 hours, then allowed to cool to room temperature. Refer to A6.5 for a discussion on the purpose of aging. The specimen shall be tested in the manner described in the Tension Test section of ANSI/AWS B4.0, *Standard Methods for Mechanical Testing of Welds*.

12.3 The results of the tension test shall meet the requirements specified in Table 6U or Table 6M, as applicable.

13. Impact Test

13.1 For those classifications for which impact testing is specified in Table 3, five Charpy V-notch impact specimens, as specified in the Fracture Toughness Testing of Welds section of ANSI/AWS B4.0, shall be machined from the test assembly shown in Fig. 3A.

The Charpy V-notch specimens shall have the notched surface and the surface to be struck parallel within 0.002 in. [0.05 mm]. The other two surfaces shall be square with the notched or struck surface within ±10

TABLE 7U
A5.23 IMPACT TEST REQUIREMENTS[1] [2]

Digit	Maximum Test Temperature, °F	Minimum Average Energy Level
0	0	20 ft · lbf
2	−20	
4	−40	
5	−50	
6	−60	
8	−80	
10	−100	
15	−150	
Z	No impact requirements	

NOTES:
(1) Based on the results of the impact tests of the weld metal, the manufacturer shall insert in the classification the appropriate digit from Table 7U, as indicated in Figure 1U.
(2) Weld metal from a specific flux-electrode combination that meets impact requirements at a given temperature also meets the requirements at all higher temperatures in this table (i.e., weld metal meeting the requirements for digit 5 also meets the requirements for digits 4, 2, 0, and Z).
(3) Weld metals with the "N" suffix shall also have a Charpy V-notch energy level of at least 75 ft · lbf at room temperature (see 13.4).

TABLE 7M
A5.23M IMPACT TEST REQUIREMENTS[1] [2]

Digit	Maximum Test Temperature, °C	Minimum Average Energy Level
0	0	27 Joules
2	−20	
3	−30	
4	−40	
5	−50	
6	−60	
7	−70	
10	−100	
Z	No impact requirements	

NOTES:
(1) Based on the results of the impact tests of the weld metal, the manufacturer shall insert in the classification the appropriate digit from Table 7M, as indicated in Figure 1M.
(2) Weld metal from a specific flux-electrode combination that meets impact requirements at a given temperature also meets the requirements at all higher temperatures in this table (i.e., weld metal meeting the requirements for digit 5 also meets the requirements for digits 4, 3, 2, 0, and Z).
(3) Weld metals with the "N" suffix shall also have a Charpy V-notch energy level of at least 102 Joules at room temperature (see 13.4).

minutes of a degree. The notch shall be smoothly cut by mechanical means and shall be square with the longitudinal edge of the specimen within one degree.

The geometry of the notch shall be measured on at least one specimen in a set of five specimens. Measurement shall be done at minimum 50 times magnification on either a shadowgraph or a metallograph. The correct location of the notch shall be verified by etching before or after machining.

For flux-electrode combinations classified in the post-weld heat-treated condition, the weld metal shall be heat-treated as shown in Table 5 before final machining of the specimens.

13.2 The five specimens shall be tested in accordance with the Fracture Toughness Test section of ANSI/AWS B4.0. The test temperature shall be as specified in Table 7U or Table 7M, as applicable, for the classification under test.

13.3U In evaluating the test results, the lowest and the highest values obtained shall be disregarded. Two of the remaining three values shall equal, or exceed, the specified 20 ft·lbf energy level. One of the three may be lower, but not lower than 15 ft·lbf, and the average of the three shall not be less than the required 20 ft·lbf energy level.

13.3M In evaluating the test results, the lowest and the highest values obtained shall be disregarded. Two of the remaining three values shall equal, or exceed, the specified 27 J energy level. One of the three may be lower, but not lower than 20 J, and the average of the three shall not be less than the required 27 J energy level.

13.4 For classifications with the "N" (nuclear) designation, three additional specimens shall be prepared. These specimens shall be tested at room temperature. Two of the three shall equal or exceed 75 ft·lbf [102 J], and the third shall be not lower than 70 ft·lbf [95 J]. The average of the three shall equal or exceed 75 ft·lbf [102 J].

14. Diffusible Hydrogen Test

14.1 For each flux-electrode combination to be identified by a diffusible hydrogen designator, that combination shall be tested in the as-manufactured condition according to one of the methods given in ANSI/AWS A4.3, *Standard Methods for Determination of the Diffusible Hydrogen Content of Martensitic, Bainitic, and Ferritic Steel Weld Metal Produced by Arc Welding.* The welding procedure shown in Fig. 3B for the Groove Weld Test shall be used for the diffusible hydrogen test. The travel speed, however, may be increased up

TABLE 8
DIFFUSIBLE HYDROGEN REQUIREMENTS[1]

AWS Flux-Electrode Combination Classification	Optional Supplemental Diffusible Hydrogen Designator[2]	Average Diffusible Hydrogen, Maximum (ml/100g Deposited Metal)[3]
All	H16	16.0
All	H8	8.0
All	H4	4.0
All	H2	2.0

NOTES:
(1) Diffusible hydrogen test is required only when specified by the purchaser or when the manufacturer puts the diffusible hydrogen designator on the label (see also Section A3 and A6.4 in the Annex).
(2) This designator is added to the end of the complete flux-electrode classification system (see Figures 1U and 1M)
(3) Flux-electrode combinations meeting requirements for an H2 designator also meet the requirements for H4, H8, and H16.
Flux-electrode combinations meeting requirements for an H4 designator also meet the requirements for H8 and H16.
Flux-electrode combinations meeting the requirements for an H8 designator also meet the requirements for H16.

to a maximum of 28 in./min [12 mm/s]. This adjustment in travel speed is permitted in order to establish a weld bead width that is appropriate for the specimen. The electrode, flux, or both, may be baked to restore the moisture content before testing to the as-manufactured condition. When this is done, the baking time and temperature shall be noted on the test report. The electrode manufacturer, flux manufacturer, or both, should be consulted for their recommendation regarding the time and temperature for restoring their products to the as-manufactured condition. The diffusible hydrogen designator may be added to the classification designation according to the average test value as compared to the requirements of Table 8.

14.2 For purposes of certifying compliance with diffusible hydrogen requirements, the reference atmospheric condition shall be an absolute humidity of 10 grains of moisture per pound [1.5 grams of moisture per kg] of dry air at the time of welding. The actual atmospheric conditions shall be reported along with the average diffusible hydrogen value for the test according to ANSI/AWS A4.3.

14.3 When the absolute humidity equals or exceeds the reference condition at the time of preparation of the test assembly, the test shall be acceptable as demonstrating compliance with the requirements of this specification, provided that the actual test results satisfy the diffusible hydrogen requirements for a given designator, as specified in Table 8.

PART C — MANUFACTURE, IDENTIFICATION, AND PACKAGING

15. Method of Manufacture

The electrodes and fluxes classified according to this specification may be manufactured by any method that will produce material that meets the requirements of this specification.

15.1 Crushed Slags. Slag formed during the welding process that is subsequently crushed for use as a welding flux is defined as *crushed slag*. Crushed slag and blends of crushed slag with unused (virgin) flux may be classified as a welding flux under this specification. The letter "S" shall be used as a mandatory classification designator as shown in Figs. 1U and 1M when the flux being classified is a crushed slag or is a blend of crushed slag with virgin flux. (See A6.1.5 in the Annex.)

16. Electrode Requirements

16.1 Standard Sizes. Standard sizes for electrodes in the different package forms (coils with support, coils without support, and drums) are shown in Table 9U or Table 9M, as applicable.

16.2 Finish and Uniformity

16.2.1 The electrode shall have a smooth finish which is free from slivers, depressions, scratches, scale, seams, laps (exclusive of the longitudinal joint in

TABLE 9U
A5.23 STANDARD ELECTRODE SIZES AND TOLERANCES[1]

Diameter (in.)	Tolerance (in.) Solid (E)	Composite (EC)
1/16 or 0.062 5/64 or 0.078 3/32 or 0.094	±0.002	±0.003
7/64 or 0.109 1/8 or 0.125	±0.003	±0.004
5/32 or 0.156 3/16 or 0.188 7/32 or 0.219 1/4 or 0.250	±0.004	±0.005

NOTE:
(1) Other sizes and tolerances may be supplied as agreed between purchaser and supplier.

TABLE 9M
A5.23M STANDARD ELECTRODE SIZES AND TOLERANCES[1]

Diameter (mm)	Tolerance (± mm) Solid (E)	Composite (EC)
1.6 2.0 2.4 2.5 2.8	±0.04	+0.04, −0.05
3.0 3.2 4.0 4.8 5.0 5.6 6.0 6.4	±0.006	+0.06, −0.08

NOTE:
(1) Other sizes and tolerances may be supplied as agreed between purchaser and supplier.

composite electrodes), and foreign matter that would adversely affect the welding characteristics, the operation of the welding equipment, or the properties of the weld metal.

16.2.2 Each continuous length of electrode shall be from a single heat or lot of material. Welds, when present, shall have been made so as not to interfere with the uniform, uninterrupted feeding of the electrode on automatic and semiautomatic equipment.

16.2.3 Core ingredients in composite electrodes shall be distributed with sufficient uniformity throughout the length of the electrode, so as not to adversely affect the performance of the electrode or the properties of the weld metal.

16.2.4 A suitable protective coating may be applied to any electrode in this specification. Copper may be used as a coating for any classification except one that carries the designator "N" (nuclear). Coating of "N" electrodes with copper or copper-bearing material is prohibited.

16.3 Standard Package Forms

16.3.1 Standard package forms are coils with support, coils without support, and drums. Standard package dimensions and weights for each form are given in Table 10. Package forms, sizes, and weights other than these shall be as agreed upon between purchaser and supplier.

16.3.2 The liners in coils with support shall be designed and constructed to prevent distortion of the coil during normal handling and use and shall be clean and dry enough to maintain the cleanliness of the electrode.

16.3.3 Drums shall be designed and constructed to prevent distortion of the electrode during normal handling and use and shall be clean and dry enough to maintain the cleanliness of the electrode.

16.4 Winding Requirements

16.4.1 The electrode shall be wound so that kinks, waves, sharp bends, or wedging are not encountered, leaving the electrode free to unwind without restriction. The outside end of the electrode (the end with which welding is to begin) shall be identified so it can be readily located and shall be fastened to avoid unwinding.

16.4.2 The cast and helix of the electrode in coils and drums shall be such that the electrode will feed in an uninterrupted manner on automatic and semiautomatic equipment.

16.5 Electrode Identification

16.5.1 The product information and the precautionary information required in 16.7 for marking each package shall appear also on each coil and drum.

16.5.2 Coils without support shall have a tag containing this information securely attached to the inside end of the coil.

TABLE 10
STANDARD DIMENSIONS AND WEIGHTS[1] [2]

	Electrode Size[3]		Net Weight of Coil[4]		Inside Diameter of Liner		Width of Coil, Max.		Outside Diameter of Coil, Max.	
	in.	mm	lb	kg	in.	mm	in.	mm	in.	mm
Coils with Support	1 1/16–1/4		25 50 60 65		12 ± 1/8		2 1/2 or 4 5/8		17 1/2 or 17	
		1.6–6.4		12 15 20 25 30		300 + 15, −0		(5)		(5)
	3/32–1/4		100 150 200		(5)		5		31 1/2	
		2.4–6.4		45 70 90 100		610 ± 10		130		800
Coils without Support	1/16–1/4	1.6–6.4	As agreed between purchaser and supplier							
Drums	1/16–1/4	1.6–6.4	As agreed between purchaser and supplier							

NOTES:
(1) Values specified in "in." or "lb" apply to A5.23. Values specified in "mm" or "kg" apply to A5.23M.
(2) Other dimensions and weights may be supplied as agreed between purchaser and supplier.
(3) The range is inclusive.
(4) Net weights shall not vary more than ±10 percent.
(5) The diameter of the liner shall be agreed between purchaser and supplier.

16.5.3 Coils with support shall have the information securely affixed in a prominent location on the support.

16.5.4 Drums shall have the information securely affixed in a prominent location on the side of the drum.

16.6 Packaging. Electrodes shall be suitably packaged to ensure against damage during shipment and storage under normal conditions.

16.7 Marking of Packages

16.7.1 The following product information (as a minimum) shall be legibly marked so as to be visible from the outside of each unit package:

(a) AWS specification and classification (year of issue may be excluded)

(b) Supplier's name and trade designation

(c) In the case of a composite electrode, the trade designation of the flux (or fluxes) with which its weld metal composition meets the requirements of Table 2

(d) Size and net weight

(e) Lot, control, or heat number

16.7.2 The following precautionary information (as a minimum) shall be prominently displayed in legible print on all packages of welding electrodes, including individual unit packages enclosed within a larger package.

WARNING:

PROTECT yourself and others. Read and understand this information.

FUMES and GASES can be hazardous to your health.

ARC RAYS can injure eyes and burn skin.

ELECTRIC SHOCK can KILL.

- Before use, read and understand the manufacturer's instructions, Material Safety Data Sheets (MSDSs), and your employer's safety practices.
- Keep your head out of the fumes.
- Use enough ventilation, exhaust at the arc, or both, to keep fumes and gases away from your breathing zone and the general area.
- Wear correct eye, ear, and body protection.
- Do not touch live electrical parts.
- See American National Standard ANSI/ASC Z49.1, *Safety in Welding, Cutting, and Allied Processes,* published by the American Welding Society, 550 N.W. LeJeune Road, Miami, FL 33126; and OSHA Safety and Health Standards, *29 CFR 1910*, available from the U.S. Government Printing Office, Washington, DC 20402.

DO NOT REMOVE THIS INFORMATION

17. Flux Requirements

17.1 Form and Particle Size. Flux shall be granular in form and shall be capable of flowing freely through the flux feeding tubes, valves, and nozzles of standard submerged arc welding equipment. Particle size is not specified here, but, when it is addressed, it shall be a matter of agreement between the purchaser and the supplier.

17.2 Usability. The flux shall permit the production of uniform, well-shaped beads that merge smoothly with each other and the base metal. Undercut, if any, shall not be so deep or so widespread that a subsequent weld pass will not remove it.

17.3 Packaging

17.3.1 Flux shall be suitably packaged to ensure against damage during shipment.

17.3.2 Flux, in its original unopened container, shall withstand storage under normal conditions for at least six months without damage to its welding characteristics or the properties of the weld. Heating of the flux to assure dryness may be necessary when the very best properties (of which the materials are capable) are required. For specific recommendations, consult the manufacturer.

17.4 Marking of Packages

17.4.1 The following product information (as a minimum) shall be legibly marked so as to be visible from the outside of each unit package.

(a) AWS specification and classification (year of issue may be excluded).

(b) Supplier's name and trade designation (in the case of crushed slags, the crusher, not the original producer of the flux, is the supplier. See also Annex A6.1.5).

(c) The trade designation of each composite electrode with which the flux manufacturer has classified the flux, if applicable.

(d) Net weight.

(e) Lot, control, or heat number.

(f) Particle size, if more than one particle size of flux of that trade designation is produced.

17.4.2 All packages of flux shall be marked as required in 16.7.2 for the electrodes.

Annex
Guide to AWS Specification for Low-Alloy Steel Electrodes and Fluxes for Submerged Arc Welding

(This Annex is not a part of ANSI/AWS A5.23/A5.23M-1997, *Specification for Low-Alloy Steel Electrodes and Fluxes for Submerged Arc Welding*, but is included for information purposes only).

A1. Introduction

The purpose of this guide is to correlate the electrode and flux classifications with their intended applications so the specification can be used effectively. Reference to appropriate base metal specifications is made whenever that can be done and when it would be helpful. Such references are intended only as examples rather than complete listings of the base metals for which each electrode and flux combination is suitable.

A2. Classification System

A2.1 Classification of Electrodes. The system for identifying the electrode classifications in this specification follows the standard pattern used in other AWS filler metal specifications. The letter "E" (or "EC" for composite electrodes) at the beginning of each classification designation stands for electrode. The remainder of the designation indicates the chemical composition of the electrode or, in the case of composite electrodes, the chemical composition of the weld metal obtained with a particular flux. See Fig. 1U or Fig. 1M, as applicable.

As examples, consider the following: EL12, EM12K, EB3, EM3, and ECB3. The prefix "E" designates an electrode, as in other specifications. The EB3 and EM3 electrodes are solid electrodes whose compositions are shown as electrode compositions in Table 1. The letter "C" in ECB3 indicates that the electrode is a composite electrode. Such electrodes are classified by the composition of the weld metal produced with a specific flux. The composition of composite electrodes is not used because the composite electrode may include metallic elements in the core material that are also present as oxides, fluorides, etc., of those same elements. Therefore, the chemical analysis of a composite electrode may not be directly comparable to an analysis made on a solid electrode. For this reason, the user is referred to weld metal composition (Table 2) with a particular flux, rather than to electrode composition.

The letter "N" when added as a suffix is an optional supplemental designator indicating that the electrode is intended for certain very special welds in nuclear applications. These welds are found in the core belt region of the reactor vessel. This region is subject to intense neutron radiation, and it is necessary, therefore, that the phosphorus, vanadium, and copper contents of this weld metal be limited in order to resist neutron radiation-induced embrittlement. It is also necessary that the weld metal have a high upper-shelf energy level in order to withstand some embrittlement, yet remain serviceable over the years. These electrodes are not required elsewhere; however, they could be used anywhere that weld metal with an exceptionally high upper-shelf energy level is required.

A2.2 "G" Classification and the Use of "Not Specified" and "Not Required"

A2.2.1 This specification includes filler metals classified as EG or ECG. The "G" indicates that the filler metal is of a general classification. It is "general" because not all of the particular requirements specified for each of the other classifications are specified for this classification.

The intent, in establishing this classification, is to provide a means by which filler metals that differ in one respect or another (chemical composition, for example) from all other classifications (meaning that

the composition of the filler metal — in the case of the example — does not meet the composition specified for any of the classifications in the specification) can still be classified according to the specification. The purpose is to allow a useful filler metal — one that otherwise would have to await a revision of the specification — to be classified immediately, under the existing specification. This means, then, that two filler metals — each bearing the same "G" classification — may be quite different in some certain respect (chemical composition, again, for example).

A2.2.2 The point of difference (although not necessarily the amount of the difference) referred to above will be readily apparent from the use of the words "not specified" and "not required" in the specification. The use of these words is as follows:

Not Specified is used in those areas of the specification that refer to the results of some particular test. It indicates that requirements for that test are not specified for that particular classification.

Not Required is used in those areas of the specification that refer to the test that normally is required to be conducted to classify a filler metal. It indicates that the test is not required because the requirements (results) for the test have not been specified for that particular classification.

Restating the case, when a requirement is not specified, it is not necessary to conduct the corresponding test in order to classify a filler metal to that classification. When a purchaser wants the information provided by that test, in order to consider a particular product of that classification for a certain application, the purchaser will have to arrange for that information with the supplier of that product. The purchaser will also have to establish with that supplier just what the testing procedure and the acceptance requirements are to be for that test. The purchaser may want to incorporate that information (via ANSI/AWS A5.01, *Filler Metal Procurement Guidelines*) in the purchase order.

A2.2.3 Request for Filler Metal Classification

(a) When a filler metal cannot be classified according to some classification other than a "G" classification, the manufacturer may request that a classification be established for that filler metal. The manufacturer may do this by following the procedure given here. When the manufacturer elects to use the "G" classification, the Committee on Filler Metals recommends that manufacturer still request that a classification be established for that filler metal, as long as the filler metal is of commercial significance.

(b) A request to establish a new filler metal classification must be a written request, and it needs to provide sufficient detail to permit the Committee on Filler Metals or the Subcommittee to determine whether a new classification or the modification of an existing classification is more appropriate, and whether either is necessary to satisfy the need. The request needs to state the variables and their limits, for such a classification or modification. The request should contain some indication of the time by which completion of the new classification or modification is needed.

(c) The request should be sent to the Secretary, Committee on Filler Metals, at AWS Headquarters. Upon receipt of the request, the Secretary will do the following:

(1) Assign an identifying number to the request. This number will include the date the request was received.

(2) Confirm receipt of the request and give the identification number to the person who made the request.

(3) Send a copy of the request to the Chair of the Committee on Filler Metals, and the particular Subcommittee involved.

(4) File the original request.

(5) Add the request to the log of outstanding requests.

(d) All necessary action on each request will be completed as soon as possible. If more than 12 months lapse, the Secretary shall inform the requestor of the status of the request, with copies to the Chair of the Committee and the Subcommittee. Requests still outstanding after 18 months shall be considered not to have been answered in a "timely manner" and the Secretary shall report these to the Chair of the Committee on Filler Metals for action.

(e) The Secretary shall include a copy of the log of all requests pending and those completed during the preceding year with the agenda for each Committee on Filler Metals meeting. Any other publication of requests that have been completed will be at the option of the American Welding Society, as deemed appropriate.

A2.3 Classification of Fluxes. Fluxes are classified on the basis of the mechanical properties and the chemical composition of the weld metal they produce with some certain classification of electrode, under the specific test conditions called for in Part B of this specification.

A2.3.1U As examples of A5.23 U.S. Customary Unit classifications, consider the following:

F7P0-EL12-A1
FS8A6-EF6-F6
F10PZ-ECB3-B3
F9A2-ECM1-M1

The prefix "F" designates an unused (virgin) flux. The prefix "FS" designates a flux that is made solely from crushed slag or is a blend of crushed slag with virgin flux. This is followed by one or two digits representing the minimum tensile strength required of the weld metal in 10 000 psi increments.

When the letter "A" follows the strength designator, it indicates that the weld metal was tested (and is classified) in the as-welded condition. When the letter "P" follows the strength designator, it indicates that the weld metal was tested (and is classified) after the postweld heat treatment called for in the specification. The digit(s) that follows the A or P will be a number or the letter "Z." This digit(s) refers to the impact strength of the weld metal. Specifically, it designates, on the Fahrenheit scale, a temperature at (and above) which the weld metal meets or exceeds the required 20 ft·lbf Charpy V-notch impact strength (except for the letter Z, which indicates that no impact requirement is specified — see Table 7U).[4]

These mechanical property designations are followed by the designation of the electrode used in classifying the flux (see Table 1). The suffix included after the first hyphen (EL12, ENi3, ECB3, or ECM1) refers to the electrode classification (solid electrodes from Table 1 or composite electrodes from Table 2) with which the flux will produce weld metal that meets the specified mechanical properties when tested as called for in the specification. The suffix after the second hyphen refers to the weld metal composition (Table 2) without regard to whether the electrode was solid or composite.

A2.3.1M As examples of A5.23M, International System of Units (SI) classifications, consider the following:

F62P2-FB3-B3
FS55AZ-EF4-F4
F76A3-ECM2-M2

The prefix "F" designates a virgin flux. The prefix "FS" designates a flux that is made solely from crushed slag or is a blend of crushed slag with virgin flux. This is followed by two digits representing the minimum tensile strength required of the weld metal in 10 000 MPa increments.

When the letter "A" or "P" follows the strength designator, it indicates, as it does in the A5.23 classification system, the weld metal was tested (and is classified) in either the as-welded (A) or postweld heat-treated (P) condition. The digit(s) that follows the "A" or "P" will be a number or the letter "Z." This digit refers to the impact strength of the weld metal. Specifically, it designates, on the Celsius scale, a temperature at (and above) which the weld metal meets, or exceeds, the required 27 J Charpy V-notch impact strength (except for the letter "Z" which indicates that no impact requirement is specified — see Table 7M).

These mechanical property designations are followed by the designation of the electrode used in classifying the flux (see Tables 1 and 2). The suffix (EB3, ECM2, etc.) included after the first hyphen refers to the electrode classification (solid electrodes from Table 1 or composite electrodes from Table 2) with which the flux will produce weld metal that meets the specified mechanical properties when tested as called for in the specification. The suffix after the second hyphen refers to the weld metal composition (Table 2) without regard to whether the electrode was solid or composite.

A2.3.2 It should be noted that flux of any specific trade designation may have many classifications. The number is limited only by the number of different electrode classifications and the condition of heat treatment (as-welded and postweld heat treated) with which the flux can meet the classification requirements. The marking of the flux package lists at least one, and may list all, classifications to which the flux conforms. It should also be noted that the specific usability (or operating) characteristics of various fluxes of the same classification may differ in one respect or another.

A2.3.3 Solid electrodes having the same classification are interchangeable when used with a specific flux; composite electrodes may not be.

A2.4 International Designation System. An international system for designating welding filler metals is under development by the International Institute of Welding (IIW) for use in future specifications to be issued by the International Standards Organization (ISO). Table A1 shows the proposed designations for steel filler metals. In that system, the initial "S" designates a solid wire or rod followed by a four-digit number. Composite wires are designated with an initial "T."

[4] Note that except for digit "4," the same designator for impact strength in Tables 7U and 7M signify different temperatures. For example, "6" in Table 7U signifies a maximum test temperature of −60°F, whereas the same designator in Table 7M signifies a maximum test temperature of −60°C, equivalent to −76°F.

TABLE A1
COMPARISON OF ELECTRODE DESIGNATIONS

AWS Classification	Proposed ISO Designation[1]
EL12	S1000
EM12K	S2010
EA1	S1000-A1
EA2	S2000-A2
EA3	S4000-A3
EA3K	S4020-A3
EA4	S3000-A3
EB1	S1100-B05
EB2	S1000-B2
EB2H	S1200-B2H
EB3	S1000-B3
EB5	S1210-B05
EB6	S1000-B6
EB6H	S2100-B6
EB8	S2000-B8
EB9	S2001-B9
ENi1	S2000-N1
ENi1K	S2010-N1
ENi2	S2000-N2
ENi3	S2000-N3
ENi4	S2002-NM2
ENi5	S2002-NM1
EF1	S2005-NM1
EF2	S4005-NM
EF3	S4005-NM1
EF4	S2002-NCM
EF5	S4005-NCM3
EF6	S3005-NCM2
EM2	S3114-NCM2
EM3	S3115-NCM2
EM4	S4105-NCM3
EW	S1000-W

NOTE:
(1) Based on IIW Doc. XII-D-197-97

A3. Acceptance

Acceptance of all welding materials classified under this specification is in accordance with ANSI/AWS A5.01, *Filler Metal Procurement Guidelines*, as the specification states. Any testing a purchaser requires of the supplier, for material shipped in accordance with this specification, should be clearly stated in the purchase order in accordance with ANSI/AWS A5.01.

In the absence of any such statement in the purchase order, the supplier may ship the material with whatever testing the supplier normally conducts on material of that classification, as specified in Schedule F, Table 1, of the ANSI/AWS A5.01. Testing in accordance with any other schedule in that table shall be specifically required by the purchase order. In such cases, acceptance of the material shipped shall be in accordance with those requirements.

A4. Certification

The act of placing the AWS specification and classification designations on the packaging enclosing the product or the classification on the product itself, constitutes the supplier's (manufacturer's) certification that the product meets all of the requirements of the specification.

The only testing requirement implicit in this certification is that the manufacturer has actually conducted the tests required by the specification on material that is representative of that being shipped, and that the material met the requirements of the specification. Representative material, in this case, is any production run of that classification using the same formulation. "Certification" is not to be construed to mean that tests of any kind were necessarily conducted on samples of the specific material shipped. Tests on such material may or may not have been made. The basis for the certification required by the specification is the classification test of "representative material" cited above, and the "Manufacturer's Quality Assurance Program" in ANSI/AWS A5.01.

A5. Ventilation During Welding

A5.1 The following are five major factors which govern the quantity of fumes to which welders and welding operators are exposed during welding:

(a) Dimensions of the space in which welding is done (with special regard to the height of the ceiling)

(b) Number of welders and welding operators working in that space

(c) Rate of evolution of fumes, gases, or dust according to the materials and processes involved

(d) The proximity of the welders or welding operators to the fumes as the fumes issue from the welding zone, and to the gases and dust in the space in which the welders or welding operators are working

(e) The ventilation provided to the space in which the welding is done

A5.2 American National Standard ANSI/ASC Z49.1, *Safety in Welding, Cutting, and Allied Processes* (published by the American Welding Society), discusses the ventilation that is required during welding and should be referred to for details. Attention is particularly drawn to the section of that document on ventilation.

A6. Welding Considerations

A6.1 Type of Fluxes. Submerged arc welding fluxes are granular, fusible mineral compounds of various proportions manufactured by any of several different methods. In addition, some fluxes may contain intimately mixed metallic ingredients to deoxidize the weld pool or add alloy elements, or both. Any flux is likely to produce weld metal of somewhat different composition from that of the electrode used with it due to chemical reactions in the arc and sometimes to the presence of metallic ingredients in the flux. A change in arc voltage during welding will change the quantity of flux interacting with a given quantity of electrode and may, therefore, change the composition of the weld metal. This latter change provides a means of describing fluxes as "neutral," "active," or "alloy."

A6.1.1 Neutral Fluxes. Neutral fluxes are defined as those which will not produce any significant change in the weld metal manganese and silicon content as a result of a large change in the arc voltage, and thus, the arc length.

The primary use for neutral fluxes is in multipass welding, especially when the base plate exceeds 1 in. [25 mm] in thickness.

The following considerations concerning neutral fluxes should be noted:

(a) Since neutral fluxes contain little or no deoxidizers, they rely on the electrode to provide deoxidation. Single-pass welds with insufficient deoxidation on heavily oxidized base metal may be prone to porosity or longitudinal centerline cracking, or both.

(b) While neutral fluxes do maintain the composition of the weld metal even when the voltage is changed, it is not always true that the composition of the weld metal deposit is the same as the composition of the electrode used. Some neutral fluxes break down in the heat of the arc and release oxygen, resulting in a lower carbon value in the weld metal than the carbon content of the electrode itself. Some neutral fluxes contain manganese silicate, which can decompose in the heat of the arc to add some manganese and silicon to the weld metal even though no metallic manganese or silicon was added to these particular fluxes. These changes in composition from the electrode used to the weld metal obtained are fairly consistent even when there are large changes in voltage.

(c) Even when a neutral flux is used to maintain the weld metal composition through a range of welding voltages, weld properties such as strength level and impact properties can change because of changes in other welding parameters such as depth of fusion, heat input, and number of passes.

(d) While a flux may be neutral with respect to manganese and silicon, it may not be neutral with respect to active alloy elements, most notably chromium. Some, but not all, neutral fluxes tend to reduce the chromium content of the weld metal as compared to that of the electrode. An electrode of somewhat higher chromium content than the intended weld metal may be necessary in such cases. Note that the EB3 chromium range for solid electrodes in Table 1 is higher than the corresponding weld metal chromium range in Table 2.

A6.1.2 Active Fluxes. Active fluxes are those which contain small amounts of manganese, silicon, or both. These deoxidizers are added to the flux to provide improved resistance to porosity and weld cracking caused by contaminants on or in the base metal.

The primary use for active fluxes is to make single-pass welds, especially on oxidized base plate.

The following considerations concerning active fluxes should be noted:

(a) Since active fluxes do contain some deoxidizers, the manganese and silicon in the weld metal will vary with changes in arc voltage. An increase in manganese or silicon increases the strength and hardness of the weld metal but may lower the impact properties. For this reason, voltage may need to be more tightly controlled for multipass welding with active fluxes than when using neutral fluxes.

(b) Some fluxes are more active than others. This means they offer more resistance to oxides in single-pass welds than a flux which is less active, but may pose more problems in multipass welding.

A6.1.3 Alloy Fluxes. Alloy fluxes are those which can be used with carbon steel electrodes to make alloy weld metal. The alloys for the weld metal are added as ingredients in the flux. As with active fluxes, where the recovery of manganese and silicon is affected significantly by arc voltage, so with alloy fluxes, the recovery of alloy elements from the flux is affected significantly by the arc voltage. With alloy fluxes, the manufacturer's recommendations should be closely followed if desired alloy weld metal compositions are to be obtained. The use as a welding flux of crushed slags generated from alloy fluxes is not recommended.

A6.1.4 Wall Neutrality Number. The Wall Neutrality Number is a convenient relative measure of flux neutrality. The Wall Neutrality Number addresses carbon steel weld metals with regard to their manganese and silicon content. It does not address alloy fluxes. For a flux-electrode combination to be considered neutral, it

should have a Wall Neutrality Number of 35 or less. The lower the Wall Neutrality Number, the more neutral is the flux.

Determination of the Wall Neutrality Number (N) can be done in accordance with the following:

(a) A weld pad of the type shown in Fig. 2 is welded with the flux-electrode combination being tested. The welding parameters shall be as specified in Fig. 3B for the weld test plate for the diameter electrode being used.

(b) A second weld pad is welded using the same parameters, except that the arc voltage is increased by 8 volts.

(c) The top surface of each of the weld pads is ground or machined smooth to clean metal. Samples sufficient for analysis are removed by machining. Weld metal is analyzed only from the top (fourth) layer of the weld pad. The samples are analyzed separately for silicon and manganese.

(d) The Wall Neutrality Number depends on the total change in silicon, regardless of whether it increases or decreases, and the total change in manganese, regardless of whether it increases or decreases. The Wall Neutrality Number is the absolute value (ignoring positive or negative signs) and is calculated as follows:

$$N = 100 (|\Delta\%Si| + |\Delta\%Mn|)$$

where $\Delta\%$ Si is the difference in silicon content of the two pads and $\Delta\%$ Mn is the corresponding difference in manganese content.

A6.1.5 Crushed Slags. Slag formed during the welding process that is subsequently crushed for use as a welding flux is defined as *crushed slag*. This is different from a recycled flux which was never fused into a slag and can often be collected from a clean surface and reused without crushing. Crushed slag and blends of crushed slag with virgin flux may be classified as a welding flux under this specification, but shall not be considered to be the same as virgin flux.

Although it is possible to crush and reuse submerged arc slag as a welding flux, the crushed slag, regardless of any addition of virgin flux to it, is a new and chemically different flux. This is because the slag formed during submerged arc welding does not have the same chemical composition or welding characteristics as the virgin flux. Its composition is affected by the composition of the original flux, chemical reactions which occur due to the welding arc, the base metal and electrode compositions, and the welding parameters.

Blends of crushed slag with the original brand of virgin flux from which it was generated cannot be assumed to conform to the classification of either component, even when both the crushed slag and virgin flux conform to the same classification (except for the "S" designator). It shall be the responsibility of the crusher or fabricator partner, who performs the blending, to verify that any intended blend of crushed slag with the original brand of virgin flux is in full conformance with the classification requirements of this specification.

As with any flux product, the manufacturer (crusher) shall follow a detailed processing procedure with controlled input material, preparation, crushing and blending which will ensure that a standard quality of output welding flux product is attained that meets the requirement for the classification designator.

A6.1.5.1 Closed-Loop, Crushed Slags. Slag generated by a fabricator from a specific brand of flux under controlled welding conditions and crushed for subsequent reuse by the same fabricator is defined as *closed-loop, crushed slag*.

Closed-loop, crushed slags or blends of closed loop crushed slag with the original brand of virgin flux ensure better control of input material by virtue of the inherent partnering of the fabricator with the crusher. In some instances, these partners may be one and the same. If blending of slag with virgin flux is done, changes in the original brand of virgin flux or in the blending ratio can affect the quality of the final product.

A6.2 Choice of Electrodes. In choosing an electrode classification for submerged arc welding of a low-alloy steel, it is important to consider the manganese, silicon, and alloy content in the electrode; the effect of the flux on recovery of manganese, silicon, and alloy elements in the weld metal; whether the weld is to be single pass or multipass, and the mechanical properties expected of the weld metal.

A certain minimum weld-metal manganese content is necessary to avoid longitudinal centerline cracking. This minimum depends upon restraint of the joint, upon welding procedure and resulting bead shape, and upon the weld-metal composition. In the event that longitudinal centerline cracking is encountered, especially with a low-manganese electrode (see Table 1) and neutral flux, a change to a higher manganese electrode, a change to a more active flux, or both, may eliminate the problem.

Certain fluxes, generally considered to be neutral, tend to remove carbon and manganese to a limited extent and to replace these elements with silicon. With such fluxes, a silicon-killed electrode is often not necessary though it may be used. Other fluxes add no silicon and may therefore require the use of a silicon-killed electrode for proper wetting and freedom from porosity.

The flux manufacturer should be consulted for electrode recommendations suitable for a given flux.

In welding single-pass fillet welds, especially on scaly base metal, it is important that the flux, electrode, or both, provide sufficient deoxidation to avoid unacceptable porosity. Silicon is a more powerful deoxidizer than manganese. In such applications, use of a silicon-killed electrode or of an active flux, or both, may be essential. Again, manufacturer's recommendations should be consulted.

Table 4 lists numerous weld metal classifications and corresponding base metals that are suitable for use with these weld metals for preparing the weld test assembly for classification of a flux-electrode combination. This gives some indication of electrodes suitable for joining these base metals. However, the entries in Table 4 should not be considered as recommendations for joining these base metals. Likewise, the absence of a correspondence in Table 4 between a weld metal classification and a base metal should not be considered a recommendation against using a particular weld metal to join a particular base metal. The steel producer, the electrode producer, and the flux producer may all be able to make appropriate recommendations and should be consulted.

Composite electrodes are generally designed for a specific flux. The flux identification is required (16.7.1) to be marked on the electrode package. Before using a composite electrode with a flux not indicated on the electrode package markings, the electrode producer should be contacted for recommendations. A composite electrode might be chosen for higher melting rate and less depth of fusion at a given current level than would be obtained under the same conditions with a solid electrode.

A6.3 Mechanical Properties of Submerged Arc Welds. Tables 6U and 7U (for the U.S. Customary Unit Classification System) and Tables 6M and 7M (for the International System of Units Classification System) of this specification list the mechanical properties required of weld metal from flux-electrode classifications (the electrodes are classified in Tables 1 and 2). The mechanical properties are determined from specimens prepared according to the procedure called for in the specification. That procedure minimizes dilution from the base metal and thereby more accurately reflects the properties of the undiluted weld metal from each flux-electrode combination.

In use, the electrodes and fluxes are handled separately, and either of them may be changed without changing the other. For this reason, a classification system with standardized test methods is necessary to relate the electrodes and fluxes to the properties of the weld metal they produce. Chemical reactions between the molten portion of the electrode and the flux, and dilution by the base metal all affect the composition of the weld metal. Submerged arc welds are not always made with the multipass procedure required in the specification. They frequently are made in a single pass, at least within certain limits on the thickness of the base metal. When a high level of notch toughness is required, multipass welds may be necessary.

The specific mechanical properties of a weld are a function of its chemical composition, cooling rate, and postweld heat treatment (PWHT). High amperage, single-pass welds have greater depth of fusion and hence, greater dilution by the base metal than lower current, multipass welds. Moreover, large, single-pass welds solidify and cool more slowly than the smaller weld beads of a multipass weld. Furthermore, the succeeding passes of a multipass weld subject the weld metal produced in previous passes to a variety of temperature and cooling cycles that alter the metallurgical structure of different portions of those beads. For this reason, the properties of a single-pass weld may be somewhat different from those of a multipass weld made with the same electrode and flux.

The weld metal properties in this specification are determined either in the as-welded condition or after a PWHT (one hour at the temperature called for in Table 5), or both. Most of the weld metals are suitable for service in either condition, but the specification cannot cover all of the conditions that such weld metals may encounter in fabrication and service. For this reason, the classifications in this specification require that the weld metals be produced and tested under certain specific conditions.

Procedures employed in practice may require voltage, amperage, type of current, and travel speeds that are considerably different from those required in this specification. In addition, differences encountered in electrode size, electrode composition, electrode extension, joint configuration, preheat temperature, interpass temperature, and PWHT can have a significant effect on the properties of the joint. Within a given electrode classification, the electrode composition can vary sufficiently to produce variations in the mechanical properties of the weld deposit in both the as-welded and postweld heat treated conditions.

PWHT times in excess of the 1 hour used for classification purposes in this specification (conventionally 20 to 30 hours for very thick sections) may have a major influence on the strength and toughness of the weld metal. Both can be substantially reduced. The user needs to be aware of this and of the fact that the mechanical properties of low-alloy steel weld metal

produced with other procedures may differ from the properties required by Tables 6U and 7U or Tables 6M and 7M of this specification, as applicable.

A6.4 Diffusible Hydrogen. The submerged arc welding process can be used to provide low-hydrogen weld deposits when care is taken to maintain the flux and electrode in a dry condition. In submerged arc welding with low-alloy steel electrodes and fluxes classified in this specification, weld metal or heat-affected zone cracking associated with diffusible hydrogen tends to become more of a problem with increasing weld-metal strength, increasing heat-affected zone hardness, increasing diffusible hydrogen content, decreasing preheat and interpass temperature, and decreasing time at or above the interpass temperature during and after welding. The detection of hydrogen cracking may be delayed for several hours after cooling due to the time required for the crack to grow to a size which can be detected by routine inspection methods. It may appear as transverse weld cracks, longitudinal centerline cracks (especially in root beads), and toe or underbead cracks in the heat-affected zone.

Since the available diffusible hydrogen level strongly influences the tendency towards hydrogen-induced cracking, it may be desirable to measure the diffusible hydrogen content resulting from a particular flux-electrode combination. Accordingly, the use of optional supplemental designators for diffusible hydrogen is introduced to indicate the maximum average value obtained under a clearly defined test condition in ANSI/AWS A4.3, *Standard Methods for Determination of the Diffusible Hydrogen Content of Martensitic, Bainitic, and Ferritic Steel Weld Metal Produced by Arc Welding.*

The user of this information is cautioned that actual fabrication conditions may result in different diffusible hydrogen values from those indicated by the designator. The use of a reference atmospheric condition during welding is necessitated because the arc always is imperfectly shielded. Moisture from the air, distinct from that in the electrode or flux, can enter the arc and subsequently the weld pool, contributing to the resulting observed diffusible hydrogen. This effect can be minimized by maintaining a suitable depth of flux cover (normally 1 to $1\frac{1}{2}$ in. [25 to 38 mm]) in front of the electrode during welding.

Nevertheless, some air will mix with the flux cover and add its moisture to the other sources of diffusible hydrogen.

It is possible for this extra diffusible hydrogen to significantly affect the outcome of a diffusible hydrogen test. For this reason, it is appropriate to specify a reference atmospheric condition. The reference atmospheric condition of 10 grains of moisture per pound [1.5 grams of moisture per kilogram] of dry air is equivalent to 10 percent relative humidity at 68°F [20°C].

A6.5 Aging of Tensile Specimens. Weld metals may contain significant quantities of hydrogen for some time after they have been made. Most of this hydrogen gradually escapes over time. This may take several weeks at room temperature or several hours at elevated temperatures. As a result of this eventual change in hydrogen level, ductility of the weld metal increases toward its inherent value, while yield, tensile, and impact strengths remain relatively unchanged. This specification permits the aging of the tensile specimens at temperatures up to 220°F [105°C] for up to 48 hours before subjecting them to tension testing. The purpose of this treatment is to facilitate removal of hydrogen from the test specimen in order to minimize discrepancies in testing.

Aging treatments are sometimes used for low-hydrogen electrode deposits, especially when testing high-strength deposits. Note that aging may involve holding test specimens at room temperature for several days or holding at a higher temperature for a shorter period of time. Consequently, users are cautioned to employ adequate preheat and interpass temperatures to avoid the deleterious effects of hydrogen in production welds.

A7. Description and Intended Use of Electrodes

A7.1 Chemical Composition. The chemical composition of the weld metal produced is often the primary consideration for electrode selection. Together with appropriate heat treatments, each composition can achieve a wide range of corrosion resistance and mechanical properties at various service temperatures. It is usually desirable for weld metal to match the chemical composition and the mechanical properties of the base metal as closely as possible. In fact, many of the electrodes classified to this specification have been developed for specific base-metal grades or classes. If an optimum match is not possible, engineering judgment together with weld testing may be required to select the most suitable electrodes.

Table 2 provides detailed weld-metal chemical composition requirements. Tables 6U, 6M, 7U and 7M list the mechanical properties of the weld metal in the as-welded condition or in the postweld heat-treated condition when the weldment is subjected to the PWHT requirements in Table 5. It should be noted that changes in welding variables or heat treatment can be expected to affect the mechanical properties. However, except

for the effects of dilution, the chemical composition can be expected to remain reasonably unchanged.

The electrode classification identifies the chemical composition of the electrode. The following paragraphs highlight the differences between these electrodes and electrode groups and indicate typical applications.

A7.1.1 EA1, EA2, EA3, EA3K, and EA4 (C-Mo Steel) Electrodes. These electrodes are similar to the medium manganese and high-manganese carbon steel electrodes classified in ANSI/AWS A5.17/A5.17M except that ½% molybdenum is added. This addition increases the strength of the weld metal, especially at elevated temperatures, and provides some increase in corrosion resistance. Typical applications include the welding of C-Mo steel base metals such as ASTM A 204 plate and A 335-P1 pipe. Electrodes of this type are particularly useful in developing impact strength on single-pass welds such as are used in the manufacture of line pipe.

A7.1.2 EB2, EB2H, EB3, EB5, EB6, EB6H, EB8, and EB9 (Cr-Mo Steel) Electrodes. These low-hydrogen electrodes produce weld metal that contains between ½% and 9% chromium and between ½% to 1% molybdenum. They are designed to produce weld metal for high-temperature service.

The letter "R" when added as a suffix to the EB2 or EB3 designation is an optional supplemental designator indicating that the electrode will meet the reduced residual limits necessary to meet "X" factor requirements for step cooling applications.

A7.1.2.1 EB9 Electrode. EB9 is a 9% Cr-1% Mo electrode modified with niobium (columbium) and vanadium designed to provide improved creep strength, toughness, fatigue life, and oxidation and corrosion resistance at elevated temperatures. Due to the higher elevated temperature properties of this alloy, components that are now fabricated from stainless and ferritic steels may be fabricated from a single alloy, eliminating problems associated with dissimilar welds.

In addition to the classification requirements in this specification, either impact toughness or high-temperature creep strength properties should be determined. Due to the influence of various levels of carbon and niobium, specific values and testing must be agreed to by the purchaser and supplier.

A7.1.3 ENi1, ENi1K, ENi2, and ENi3 (Ni Steel) Electrodes. These electrodes have been designed to produce weld metal with increased strength without being hardenable or with increased notch toughness at temperatures as low as −100°F (−73°C) or lower. They have been specified with nickel contents which fall into three nominal levels of 1% Ni, 2½% Ni and 3½% Ni.

With carbon levels of up to 0.12%, strength increases and weld deposits can meet 80 000 psi minimum tensile-strength requirements. However, with lower levels of carbon, low-temperature toughness improves to match the base-metal properties of nickel steels, such as ASTM A 203 Gr. E, ASTM A 352 LC3 and LC4 classifications.

Many low-alloy steels require PWHT to stress relieve the weld or temper the weld metal and heat-affected zone to achieve increased ductility. It is often acceptable to exceed the PWHT holding temperatures shown in Table 5. However, for many applications, nickel steel weld metal can be used without PWHT. If PWHT is to be specified for a nickel steel weldment, the holding temperature should not exceed the maximum temperature given in Table 5 for the classification considered since nickel steels can be embrittled at higher temperatures.

A7.1.4 ENi4, ENi5, EF1, EF2, and EF3 (Ni-Mo Steel) Electrodes. These electrodes contain between ½% and 2% nickel and between ¼% and ½% molybdenum. They are typically used for the welding of high-strength, low-alloy or microalloyed structural steels where a combination of strength and good notch toughness is required.

A7.1.5 EF4, EF5, and EF6 (Cr-Ni-Mo Steel) Electrodes. These electrodes use a combination of Cr, Ni, and Mo to develop the strength levels and notch toughness required for a number of high-strength, low-alloy or microalloyed structural steels.

A7.1.6 EM2, EM3, and EM4 (High-Strength, Low-Alloy Steel) Electrodes. These electrodes may contain a combination of Cr, Ni, Mo, Ti, Zr and Al. They are intended to produce high-strength deposits meeting 100 000 psi, 110 000 psi or 120 000 psi minimum tensile requirements to weld steels such as HY80 and HY100. They are most typically used for weldments not subject to PWHT.

A7.1.7 EW (Weathering Steel) Electrode. This electrode has been designed to produce weld metal that matches the corrosion resistance and the coloring of the ASTM weathering-type structural steels. These special properties are achieved by the addition of about ½% copper to the weld metal. To meet strength, ductility, and notch toughness in the weld metal, some chromium and nickel additions are also made. This electrode is used to weld the typical weathering steel, such as ASTM A 242 and A 588.

A7.1.8 EG (General Low-Alloy Steel) Electrodes. These electrodes are described in A.2.2. These electrode classifications may be either modifications of other discrete classifications or totally new classifications. Purchaser and user should obtain from the supplier the description and intended use for any EG electrode.

A8. General Safety Considerations

A8.1 Burn Protection. Molten metal, sparks, slag, and hot work surfaces are produced by welding, cutting, and allied processes. These can cause burns if precautionary measures are not used. Workers should wear protective clothing made of fire-resistant material. Pant cuffs, open pockets, or other places on clothing that can catch and retain molten metal or sparks should not be worn. High-top shoes or leather leggings and fire-resistant gloves should be worn. Pant legs should be worn over the outside of high-top shoes. Helmets or hand shields that provide protection for the face, neck, and ears, and a covering to protect the head should be used. In addition, appropriate eye protection should be used.

When welding overhead or in confined spaces, ear plugs to prevent weld spatter from entering the ear canal should be worn in combination with goggles or equivalent to give added eye protection. Clothing should be kept free of grease and oil. Combustible materials should not be carried in pockets. If any combustible substance has been spilled on clothing, a change to clean, fire-resistant clothing should be made before working with open arcs or flame. Aprons, cape-sleeves, leggings, and shoulder covers with bibs designed for welding service should be used. Where welding or cutting of unusually thick base metal is involved, sheet metal shields should be used for extra protection.

Mechanization of highly hazardous processes or jobs should be considered. Other personnel in the work area should be protected by the use of noncombustible screens or by the use of appropriate protection as described in the previous paragraph. Before leaving a work area, hot workpieces should be marked to alert other persons of this hazard. No attempt should be made to repair or disconnect electrical equipment when it is under load. Disconnection under load produces arcing of the contacts and may cause burns or shock, or both. *(Note: Burns can be caused by touching hot equipment such as electrode holders, tips, and nozzles. Therefore, insulated gloves should be worn when these items are handled, unless an adequate cooling period has been allowed before touching.)*

The following sources are for more detailed information on personal protection:

(a) American National Standards Institute. ANSI Z41, *Personal Protection — Protective Footwear, American National Standard for*, New York: American National Standards Institute.[5]

(b) ANSI/ASC Z49.1, *Safety in Welding, Cutting, and Allied Processes.* Miami, FL: American Welding Society.

(c) ANSI/ASC Z87.1, *Practice for Occupational and Educational Eye and Face Protection.* New York: American National Standards Institute.

(d) Occupational Safety and Health Administration. *Code of Federal Regulations*, Title 29 Labor, Chapter XVII, Part 1910. Washington, DC: U.S. Government Printing Office.[6]

A8.2 Electrical Hazards. Electric shock can kill. However, it can be avoided. Live electrical parts should not be touched. The manufacturer's instructions and recommended safe practices should be read and understood. Faulty installation, improper grounding, and incorrect operation and maintenance of electrical equipment are all sources of danger.

All electrical equipment and the workpieces should be grounded. The workpiece lead is not a ground lead. It is used only to complete the welding circuit. A separate connection is required to ground the workpiece. The workpiece should not be mistaken for a ground connection.

The correct cable size should be used, since sustained overloading will cause cable failure and result in possible electrical shock or fire hazard. All electrical connections should be tight, clean, and dry. Poor connections can overheat and even melt. Further, they can produce dangerous arcs and sparks. Water, grease, or dirt should not be allowed to accumulate on plugs, sockets, or electrical units. Moisture can conduct electricity. To prevent shock, the work area, equipment, and clothing should be kept dry at all times. Welders should wear dry gloves and rubber-soled shoes, or stand on a dry board or insulated platform. Cables and connections should be kept in good condition. Improper or worn electrical connections may create conditions that could cause electrical shock or short circuits. Worn, damaged, or bare cables should not be used. Open-circuit voltage should be avoided. When several welders are working with arcs of different polarities, or when a number of alternating current machines are being used, the open-

[5] ANSI documents are available from the American National Standards Institute, 11 West 42nd Street, 13th Floor, New York, NY 10036-8002.

[6] OSHA documents are available from U.S. Government Printing Office, Washington, DC 20402.

circuit voltages can be additive. The added voltages increase the severity of the shock hazard.

In case of electric shock, the power should be turned off. If the rescuer must resort to pulling the victim from the live contact, nonconducting materials should be used. If the victim is not breathing, cardiopulmonary resuscitation (CPR) should be administered as soon as contact with the electrical source is broken. A physician should be called and CPR continued until breathing has been restored, or until a physician has arrived. Electrical burns are treated as thermal burns; that is, clean, cold (iced) compresses should be applied. Contamination should be avoided; the area should be covered with a clean, dry dressing; and the patient should be transported to medical assistance. Recognized safety standards such as ANSI/ASC Z49.1, *Safety in Welding, Cutting, and Allied Processes*, and the *National Electrical Code* and NFPA No. 70, available from National Fire Protection Association, 1 Batterymarch Park, Quincy, MA 02269, should be followed.

A8.3 Fumes and Gases. Many welding, cutting, and allied processes produce fumes and gases which may be harmful to health. Fumes are solid particles which originate from welding filler metals and fluxes, the base metal, and any coatings present on the base metal. Gases are produced during the welding process or may be produced by the effects of process radiation on the surrounding environment. Management personnel and welders alike should be aware of the effects of these fumes and gases. The amount and composition of these fumes and gases depend upon the composition of the filler metal and base metal, welding process, current level, arc length, and other factors.

The possible effects of overexposure range from irritation of eyes, skin, and respiratory system to more severe complications. Effects may occur immediately or at some later time. Fumes can cause symptoms such as nausea, headaches, dizziness, and metal fume fever. The possibility of more serious health effects exists when especially toxic materials are involved. In confined spaces, the shielding gases and fumes might displace breathing air and cause asphyxiation.

One's head should always be kept out of the fumes. Sufficient ventilation, exhaust at the arc, or both, should be used to keep fumes and gases from your breathing zone and the general area.

In some cases, natural air movement will provide enough ventilation. Where ventilation may be questionable, air sampling should be used to determine if corrective measures should be applied.

(a) The permissible exposure limits required by OSHA can be found in *Code of Federal Regulations*, Title 29, Chapter XVII Part 1910. The OSHA General Industry Standards are available from the Superintendent of Documents, U.S. Government Printing Office, Washington, DC 20402.

(b) The recommended threshold limit values for these fumes and gases may be found in *Threshold Limit Values for Chemical Substances and Physical Agents in the Workroom Environment*, published by the American Conference of Governmental Industrial Hygienists (ACGIH), 1330 Kemper Meadow Drive, Cincinnati, OH 45240.

(c) The results of an AWS-funded study are available in a report entitled, *Fumes and Gases in the Welding Environment*, available from the American Welding Society, 550 N.W. LeJeune Road, Miami, FL 33126.

A8.4 Radiation. Welding, cutting, and allied operations may produce radiant energy (radiation) harmful to health. One should become acquainted with the effects of this radiant energy. Radiant energy may be ionizing (such as x-rays), or nonionizing (such as ultraviolet, visible light, or infrared). Radiation can produce a variety of effects such as skin burns and eye damage, depending on the radiant energy's wavelength and intensity, if excessive exposure occurs.

A8.4.1 Ionizing Radiation. Ionizing radiation is produced by the electron beam welding process. It is ordinarily controlled within acceptance limits by use of suitable shielding enclosing the welding area.

A8.4.2 Nonionizing Radiation. The intensity and wavelengths of nonionizing radiant energy produced depend on many factors, such as the process, welding parameters, electrode and base-metal composition, fluxes, and any coating or plating on the base metal. Some processes, such as resistance welding and cold-pressure welding ordinarily produce negligible quantities of radiant energy. With the exception of submerged arc welding when used properly, most arc welding and cutting processes, laser beam welding and torch welding, cutting, brazing, or soldering can produce quantities of nonionizing radiation such that precautionary measures are necessary.

Protection from possible harmful effects caused by nonionizing radiant energy from welding include the following measures:

(a) One should not look at welding arcs except through welding filter plates which meet the requirements of ANSI/ASC Z87.1, *Practice for Occupational and Educational Eye and Face Protection*, published by American National Standards Institute, 11 West 42nd Street, 13th Floor, New York, NY 10036-8002. It should be noted that transparent welding curtains

are not intended as welding filter plates, but rather, are intended to protect passersby from incidental exposure.

(b) Exposed skin should be protected with adequate gloves and clothing as specified in ANSI/ASC Z49.1, *Safety in Welding, Cutting, and Allied Processes*, published by American Welding Society, 550 N.W. LeJeune Road, Miami, FL 33126.

(c) Reflections from welding arcs should be avoided, and all personnel should be protected from intense reflections. *(Note: Paints using pigments of substantially zinc oxide or titanium dioxide have a lower reflectance for ultraviolet radiation.)*

(d) Screens, curtains, or adequate distance from aisles, walkways, etc. should be used to avoid exposing passersby to welding operations.

(e) Safety glasses with UV-protective side shields have been shown to provide some beneficial protection from ultraviolet radiation produced by welding arcs.

A8.4.3 Ionizing radiation information sources include:

(a) ANSI/AWS F2.1-78, *Recommended Safe Practices for Electron Beam Welding and Cutting*, available from the American Welding Society, 550 N.W. LeJeune Road, Miami, FL 33126.

(b) Manufacturer's product information literature.

A8.4.4 The following include nonionizing radiation information sources:

(a) American National Standards Institute. ANSI/ASC Z136.1, *Safe Use of Lasers*, New York, NY: American National Standards Institute.

(b) ———. ANSI/ASC Z87.1, *Practice for Occupational and Educational Eye and Face Protection*. New York, NY: American National Standards Institute.

(c) ———. ANSI/ASC Z49.1, *Safety in Welding, Cutting, and Allied Processes*. (published by AWS) Miami, FL: American Welding Society

(d) Hinrichs, J. F. "Project Committee on Radiation-Summary Report." *Welding Journal*, January 1978.

(e) Moss, C. E. "Optical Radiation Transmission Levels through Transparent Welding Curtains." *Welding Journal*, March 1979.

(f) Moss, C. E., and Murray, W. E. "Optical Radiation Levels Produced in Gas Welding, Torch Brazing, and Oxygen Cutting." *Welding Journal*, September 1979.

(g) Marshall, W. J., Sliney, D. H., et al. "Optical Radiation Levels Produced by Air-Carbon Arc Cutting Processes," *Welding Journal*, March 1980.

(h) National Technical Information Service. Nonionizing radiation protection special study No. 42-0053-77, Evaluation of the Potential Hazards from Actinic Ultraviolet Radiation Generated by Electric Welding and Cutting Arcs. Springfield, VA: National Technical Information Service. ADA-033768.

(i) Nonionizing radiation protection special study No. 42-0312-77, Evaluation of the Potential Retina Hazards from Optical Radiation Generated by Electrical Welding and Cutting Arcs. Springfield, VA: National Technical Information Service, ADA-043023.

SPECIFICATION FOR ZIRCONIUM AND ZIRCONIUM ALLOY WELDING ELECTRODES AND RODS

SFA-5.24

(Identical with AWS Specification A5.24-90)

1. Scope

This specification prescribes requirements for the classification of zirconium and zirconium alloy electrodes and rods for plasma arc, gas metal arc, and gas tungsten arc welding.

PART A — GENERAL REQUIREMENTS

2. Classification

2.1 The welding materials covered by this specification are classified according to the chemical composition of the filler metal as specified in Table 1.

2.2 Material classified under one classification shall not be classified under any other classification of this specification.

2.3 The materials classified under this specification are intended for plasma arc, gas metal arc, and gas tungsten arc welding, but that is not to prohibit their use with any other process for which they are found suitable.

3. Acceptance

Acceptance[1] of the material shall be in accordance with the provisions of ANSI/AWS A5.01, *Filler Metal Procurement Guidelines.*[2]

[1] See A3 (in the Appendix) for further information concerning acceptance, testing of the material shipped, and ANSI/AWS A5.01, *Filler Metal Procurement Guidelines.*

[2] AWS standards can be obtained from the American Welding Society 550 N.W. LeJeune Road, P.O. Box 351040, Miami, Florida 33135.

4. Certification

By affixing the AWS specification and classification designations to the packaging, or the classification to the product, the manufacturer certifies that the product meets the requirements of this specification.[3]

5. Units of Measure and Rounding-Off Procedure

5.1 U.S. Customary Units are the standard units of measure in this specification. The SI Units are given as equivalent values to the U.S. Customary Units. The standard sizes and dimensions in the two systems are not identical, and for this reason conversion from a standard size or dimension in one system will not always coincide with a standard size or dimension in the other. Suitable conversions, encompassing standard sizes of both can be made, however, if appropriate tolerances are applied in each case.

5.2 For the purpose of determining conformance with this specification, an observed or calculated value shall be rounded to the nearest unit in the last right-hand place of figures used in expressing limiting values in accordance with the rounding-off method given in ANSI/AWS A1.1, *Metric Practice Guide for the Welding Industry.*

PART B — TESTS, PROCEDURES, AND REQUIREMENTS

6. Summary of Tests

Chemical analysis of the filler metal (or, as an alternative for part of the analysis, the stock from

[3] See A4 (in the Appendix) for further information concerning Certification and the testing called for to meet this requirement.

TABLE 1
CHEMICAL COMPOSITION REQUIREMENT AND ZIRCONIUM AND ZIRCONIUM ELECTRODES AND RODS

AWS Classification	UNS Number[2]	Chemical Composition, Wt Percent[1]								
		Zirconium + Hafnium	Hafnium	Iron + Chromium	Tin	Oxygen	Hydrogen	Nitrogen	Carbon	Columbium
ERZr2	R60702	99.01 min	4.5	0.20	...	0.16	0.005	0.025	0.05	...
ERZr3	R60704	97.5 min	4.5	0.20 to 0.40	1.00 to 2.00	0.16	0.005	0.025	0.05	...
ERZr4	R60705	95.5 min	4.5	0.20	...	0.16	0.005	0.025	0.05	2.0 to 3.0

NOTES
(1) Single values are maximum, except as noted.
(2) ASTM/SAE Unified Numbering System for Metals and Alloys. Document may be obtained from SAE, Inc., 400 Commonwealth Drive, Warrendale, Pennsylvania 15096-0001.
(3) Analysis of the interstitial elements C, O, H and N shall be conducted on samples of filler metal taken after the filler metal has been reduced to its final diameter and all processing operations have been completed. Analysis of the other elements may be conducted on these same samples or it may have been conducted on samples taken from the ingot or the rod stock from which the filler metal is made. In case of dispute, samples from the finished filler metal shall be the referee method.

which the filler metal is made — see Note (3) to Table 1) is the only test required for classification of a product under this specification.

7. Retest

If the result of any test fails to meet its requirement, that test shall be repeated twice. The results of both retests shall meet the requirement. Samples for retest may be taken from the original test sample or from one or two new samples. Retest need be only for those specific elements that failed to meet the test requirement.

8. Chemical Analysis

8.1 A sample of the filler metal, or the rod stock from which it was made, shall be prepared for chemical analysis.

8.2 The sample shall be analyzed by accepted analytical methods. The referee method shall be ASTM Method E 146, *Chemical Analysis of Zirconium and Zirconium Alloys.*[4]

8.3 The results of the analysis shall meet the requirements of Table 1, for the classification of filler metal under test.

[4] ASTM standards can be obtained from the American Society for Testing and Materials, 100 Barr Harbor Drive, West Conshohocken, PA 19428-2959.

PART C — MANUFACTURE, IDENTIFICATION, AND PACKAGING

9. Method of Manufacture

The welding electrodes and rods classified according to this specification may be manufactured by any method that will produce material that meets the requirements of this specification.

10. Standard Sizes

Standard sizes for filler metal in the different package forms (straight lengths, coils with support, coils without support, and spools) are shown in Table 2.

11. Finish and Uniformity

11.1 All electrodes and rods shall have a smooth finish that is free from slivers, depressions, scratches, scale, seams, laps, and foreign matter that would adversely affect the welding characteristics, the operation of the welding equipment, or the properties of the weld metal.

11.2 Each continuous length of filler metal shall be from a single heat of material, and welds, when present, shall have been made so as not to interfere with the uniform, uninterrupted feeding of the filler metal on automatic and semiautomatic equipment.

TABLE 2
STANDARD SIZES[1] FOR FILLER METAL IN STRAIGHT LENGTHS AND COILS WITH OR WITHOUT SUPPORT

Standard Package Form	Diameter		Tolerance	
	in.	mm	in.	mm
Straight lengths,[2] coils with support, coils without support	1/16 (0.062)	1.6	±0.002	±0.05
	5/64 (0.078)	2.0		
	3/32 (0.094)	2.4		
	1/8 (0.125)	3.2		
	5/32 (0.156)	4.0		
	3/16 (0.187)	4.8		
Spools	0.20	0.5	+0.001 −0.002	+0.03 −0.05
	0.30	0.8		
	0.035	0.9		
	0.045	1.2	±0.002	±0.05
	1/16 (0.062)	1.6		

NOTES:
(1) Dimensions, sizes, tolerances, and package forms other than these shall be as agreed to by the purchaser and the supplier.
(2) Length shall be 36 in. ±1/4 in. (915 mm ±6 mm).

12. Standard Package Forms

12.1 Standard package forms are straight lengths, coils with support, coils without support, and spools. Standard package dimensions and weights for each form are given in Table 3. Package forms, sizes and weights other than these shall be as agreed to between purchaser and supplier.

12.2 The liners in coils with support shall be designed and constructed to prevent distortion of the coil during normal handling and use and shall be clean and dry enough to maintain the cleanliness of the filler metal.

12.3 Spools (Figs. 1 and 2) shall be designed and constructed to prevent distortion of the filler metal during normal handling and use and shall be clean and dry enough to maintain the cleanliness of the filler metal.

13. Winding Requirements

13.1 The filler metal shall be wound so that kinks, waves, sharp bends, overlapping, or wedging are not encountered, leaving the filler metal free to unwind without restriction. The outside end of the filler metal (the end welding is to begin with) shall be identified so it can be readily located and shall be fastened to avoid unwinding.

13.2 When required, level winding shall be used.

13.3 The cast and helix of the electrode in coils and in spools shall be such that the filler metal will feed in an uninterrupted manner in automatic and semiautomatic equipment.

14. Filler Metal Identification

14.1 The product information and the precautionary information required in Section 16, Marking of Packages, shall appear also on each coil and spool.

14.2 Coils without support shall have a tag containing this information securely attached to the inside end of the coil.

14.3 Coils with support shall have the information securely affixed in a prominent location on the support.

14.4 Spools shall have the information securely affixed in a prominent location on the outside of one flange of the spool.

15. Packaging

Electrodes and rods shall be suitably packaged to ensure against damage during shipment and storage under normal conditions.

16. Marking of Packages

16.1 The following product information (as a minimum) shall be legibly marked so as to be visible from the outside of each unit package.

(a) AWS specification and classification number (year of issue may be excluded);

TABLE 3
STANDARD PACKAGE DIMENSIONS AND WEIGHTS

Filler Metal Size[1]		Net Weight of Package[1] [2]		Width[3]		Diameter			
						Inside[4]		Outside	
in.	mm	lb.	kg	in.	mm	in.	mm	in.	mm
Straight Lengths									
1/16 through 3/16	1.6 through 4.8	10	4.5	...	...	...	...	...	...
		50	23	...	...	...	...	...	...
Coils With Support and Coils Without Support									
1/16 through 3/16	1.6 through 4.8	25	11	2 1/2 or 4 5/8	65 or 120	12 ± 1/8	305 ± 3	13 5/8	345
		50	23					15 1/8	400
		60	27	4 5/8	120			17	420
								17 1/2	430
Spools									
0.020 through 1/16	0.5 through 1.6	1	0.5	See Fig.1		...	...	See Fig.1	
		5	2.2	See Fig.2		...	...	See Fig.2	
		15	6.8	See Fig.2		...	...	See Fig.2	

NOTES:
(1) Sizes, dimensions, and weights other than these shall be as agreed to by the purchaser and the supplier.
(2) Actual net weight of the filler metal in each package shall be within 10 percent of the standard net weight shown.
(3) Width of coils and spools.
(4) Inside diameter of the liner for coils with support, and of the coil itself, for coils without support.

(b) Supplier's name and trade designation;
(c) Size and net weight;
(d) Lot, control, or heat number.

16.2 The following precautionary information (as a minimum) shall be prominently displayed in legible print on all packages of welding material, including individual unit packages enclosed within a larger package.

WARNING:

PROTECT yourself and others.

Read and understand this information.

FUMES AND GASES can be dangerous to your health.

ARC RAYS can injure eyes and burn skin.

ELECTRIC SHOCK can kill.

- Before use read and understand the manufacturer's instructions, Material Safety Data Sheets (MSDSs), and your employer's safety practices.
- Keep your head out of the fumes.
- Use enough ventilation, exhaust at the arc, or both, to keep fumes and gases away from your breathing zone and the general area.
- Wear correct eye, ear and body protection.
- Do not touch live electrical parts.
- See American National Standard Z49.1, *Safety in Welding and Cutting,* published by the American Welding Society, 550 N.W. LeJeune Road, P.O. Box 351040, Miami, Florida 33135; OSHA Safety and Health Standards, 29 CFR 1910, available from U.S. Government Printing Office, Washington, DC 20402

DO NOT REMOVE THIS INFORMATION

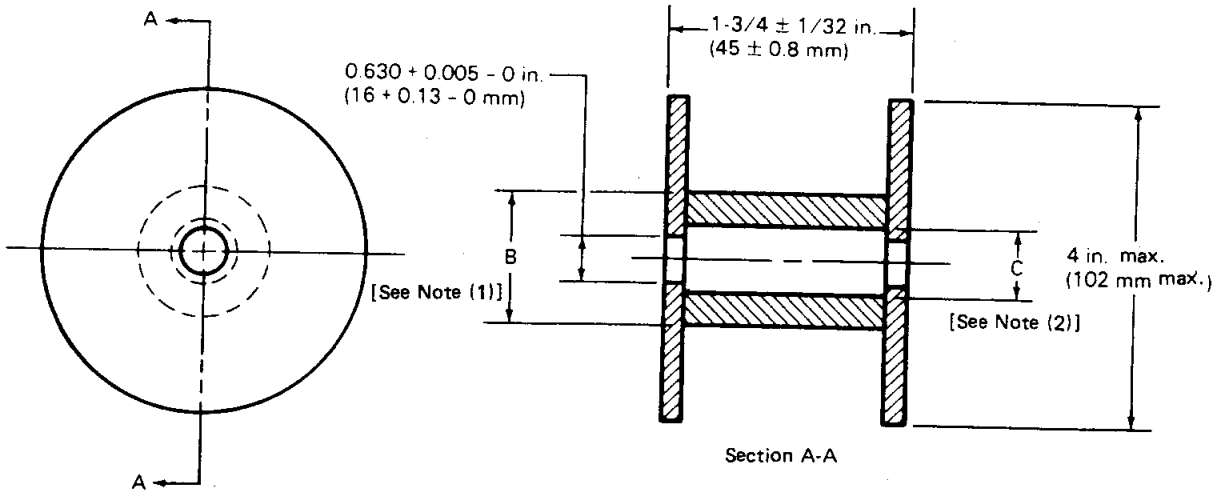

GENERAL NOTE: All dimensions are in inches.

NOTES:
(1) Dimension B, outside diameter of the barrel, shall be such as to permit proper feeding of the filler metals.
(2) Dimension C, inside diameter of the barrel, shall be such that swelling of the barrel or misalignment of the barrel and flanges will not result in the inside diameter of the barrel being less than the inside diameter of the flanges.

FIG. 1 DIMENSIONS OF STANDARD 4 IN. (100 MM) SPOOLS

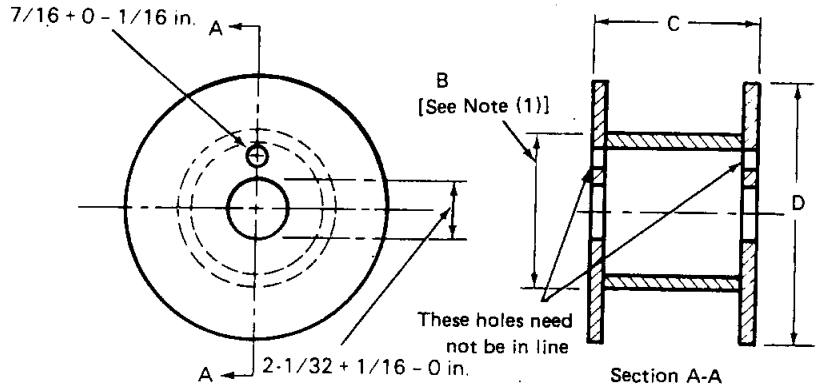

SI EQUIVALENTS

in.	mm
1/16	1.6
7/16	11
2-1/32	52

NOTE:
(1) Dimension B, outside diameter of barrel, shall be such as to permit feeding of the filler metals.

Spool Size		Dimensions			
		C		D, Maximum	
in.	mm	in.	mm	in.	mm
12	300	4 ± 1/16	100 ± 2	12	305

FIG. 2 DIMENSIONS OF STANDARD 12 IN. (300 MM) SPOOLS FOR 10 AND 25 LB (4.5 AND 11 KG) OF FILLER METAL

Appendix
Guide to AWS Specification for Zirconium and Zirconium Alloy Welding Electrodes and Rods

(This Appendix is not a part of ANSI/AWS A5.24-90, *Specification for Zirconium and Zirconium Alloy Welding Electrodes and Rods,* but is included for information purposes only.)

A1. Introduction

A1.1 The specification is intended to provide both the supplier and the purchaser of zirconium and zirconium alloy bare welding electrodes and rods with a means of product control and a basis of acceptance through mutually acceptable, sound, standard requirements.

A1.2 This guide has been prepared as an aid to prospective users of zirconium and zirconium alloy filler metals included in the specification to determine the classification best suited for a particular application, with due consideration to the particular requirements for that application.

A2. Method of Classification

A2.1 The system of classification is similar to that used in other filler metal specifications. The letter "E" at the beginning of each designation indicates a welding electrode, and the letter "R" indicates a welding rod. Since these filler metals are used as welding electrodes in gas metal arc welding and as welding rods in gas tungsten arc welding, both letters are used.

The letters "Zr" indicate that the filler metals have a zirconium base. The digits and letters that follow provide a means for identifying the nominal composition of the filler metal.

A3. Acceptance

Acceptance of all welding materials classified under this specification is in accordance with ANSI/AWS A5.01, *Filler Metal Procurement Guidelines,* as the Specification states. Any testing a purchaser requires of the supplier, for material shipped in accordance with this specification, shall be clearly stated in the purchase order, according to the provisions of ANSI/AWS A5.01. In the absence of any such statement in the purchase order, the supplier may ship the material with whatever testing the supplier normally conducts on material of that classification, as specified in Schedule F, Table 1, of the *Filler Metal Procurement Guidelines.* Testing in accordance with any other Schedule in that table must be specifically required by the purchase order. In such cases, acceptance of the material shipped will be in accordance with those requirements.

A4. Certification

The act of placing the AWS specification and classification designations on the packaging enclosing the product, or the classification on the product itself, constitutes the supplier's (manufacturer's) certification that the product meets all of the requirements of the specification.

The only testing requirement implicit in this certification is that the manufacturer has actually conducted the tests required by the specification on material that is representative of that being shipped and that the material met the requirements of the specification. Representative material, in this case, is any production run of that classification using the same formulation. "Certification" is not to be construed to mean that tests of any kind were necessarily conducted on samples of the specific material shipped. Tests on such material may or may not have been conducted. The basis for the certification required by the specification is the

classification test of "representative material" cited above, and the "Manufacturer's Quality Assurance Program" in ANSI/A5.01, *Filler Metal Procurement Guidelines.*

A5. Ventilation During Welding

A5.1 Five major factors govern the quantity of fumes in the atmosphere to which welders and welding operators are exposed during welding:

(a) Dimensions of the space in which welding is done (with special regard to height of the ceiling);

(b) Number of welders and welding operators working in that space;

(c) Rate of evolution of fumes, gases, or dust, according to the materials and process involved.

(d) The proximity of the welders or welding operators to the fumes as they issue from the welding zone, and to the gases and dusts in the space in which they are working;

(e) The ventilation provided in the space in which the welding is done.

A5.2 American National Standard Z49.1, *Safety in Welding and Cutting* (published by the American Welding Society), discusses the ventilation that is required during welding and should be referred to for details. Attention is directed particularly to the section of that document on "Health Protection and Ventilation."

A6. Welding Considerations

A6.1 Zirconium and zirconium alloys can be welded by gas tungsten arc, gas metal arc, plasma arc, and electron beam welding processes. Zirconium is a reactive metal and is sensitive to embrittlement by oxygen, nitrogen and hydrogen at temperatures above 1100°F (590°C). Consequently, the metal should be protected from atmospheric contamination. This can be provided by shielding the metal with high purity inert gas in air, in a chamber, or by a vacuum of 10^{-4}torr or lower. During arc welding, the zirconium must be shielded from the atmosphere until it is cooled below about 1100°F (593°C). Adequate protection by auxiliary inert gas shielding should be provided when welding in air and for critical applications the welding should be done in a gas tight chamber thoroughly purged of air and filled with high purity inert gas.

The zirconium metal should be free of heavy oxide and chemically clean prior to welding, as contamination from oxide, water, grease, and dirt will also cause embrittlement.

Zirconium welding rods must be chemically clean and free of heavy oxide, absorbed moisture, grease, and dirt. The welding rod should be kept in the inert gas during welding and the oxide at the tip, formed upon cooling, must be removed before reusing the rod.

Zirconium can be successfully fusion welded to titanium, tantalum, columbium (niobium), and vanadium although the weld metal will be stronger and less ductile than the base metals. Zirconium should not be fusion welded to other common structural alloys of copper, iron nickel, and aluminum as brittle zirconium intermetallic alloys are formed which produce extremely brittle welds.

A7. Description and Intended Use of Electrodes and Rods

A7.1 The ERZr2 classification is a "commercially pure" zirconium. It produces weld metal having good strength and ductility. The tensile strength should be at least 55 000 psi (379 MPa). These electrodes and rods can be used to weld all of the zirconium alloys.

A7.2 The ERZr3 classification contains tin as an alloying element. Tin increases the strength of the weld metal, yet allows it to retain good ductility. The strength should be at least 60 ksi (410 MPa). These electrodes and rods are intended only for welding UNS R60704 zirconium alloy. Weld metal from ERZr3 filler metal may not resist corrosions as well as that from ERZr2 filler metal.

A7.3 The ERZr4 classification contains columbium as an alloying element. It produces weld metal of good ductility with a tensile strength of at least 80 ksi (550 MPa). These electrodes and rods are used only to weld UNS R60705 zirconium alloy. Weld metal from ERZr4 filler metal may not resist corrosion as well as that from ERZr2 filler metal.

A8. Special Tests

It is recognized that supplementary tests may be required for certain applications. In such cases, tests to determine specific properties such as (corrosion resistance, scaling resistance, or strength at elevated temperatures or cryogenic temperatures) may be required. ANSI/AWS A5.01, *Filler Metal Procurement Guidelines* contains provisions for ordering such tests. This section is included for the guidance of those who desire to specify such special tests. Those tests may be conducted as agreed upon between supplier and purchaser.

SPECIFICATION FOR CARBON AND LOW-ALLOY STEEL ELECTRODES AND FLUXES FOR ELECTROSLAG WELDING

SFA-5.25

(Identical to AWS Specification A5.25/A5.25M-97.)

1. Scope

This specification prescribes requirements for the classification of electrodes (both solid and composite metal cored) and fluxes for electroslag welding of carbon and low-alloy steels.

PART A — GENERAL REQUIREMENTS

2. Classification

2.1 The solid electrodes covered by this specification are classified according to the chemical composition of the electrode, as specified in Table 1.

2.2 The composite metal cored electrodes covered by this specification are classified according to the chemical composition of the weld metal produced by use with a specific flux of a particular manufacturer and trade designation as specified in Table 2.

2.3 Fluxes covered by this specification are classified according to the mechanical properties of the weld metal as specified in Tables 3 and 4, when using an electrode of a particular classification.

2.4 Electrodes classified under one classification shall not be classified under any other classification in this specification. Fluxes may be classified under any number of classifications using a different electrode for each. Fluxes classified as FESX2-XXX may also be classified as FESX0-XXX and FESXZ-XXX, as specifically permitted by Note (a) to Table 4.

2.5 The electrodes and fluxes classified under this specification are intended for electroslag welding, but that is not to prohibit their use with any other process for which they are found suitable.

3. Acceptance

Acceptance[1] of the electrodes and fluxes shall be in accordance with the provisions of ANSI/AWS A5.01, *Filler Metal Procurement Guidelines*.[2]

4. Certification

By affixing the AWS Specification and Classification designations to the packaging, or the classification to the product, the manufacturer certifies that the product meets the requirements of this specification.[3]

5. Units of Measure and Rounding-Off Procedure

5.1 This specification makes use of both U.S. Customary Units and the International System of Units (SI). The measurements are not exact equivalents; therefore, each system must be used independently of the other without combining in any way. The specification with the designation A5.25 uses U.S. Customary Units. The specification A5.25M uses SI units. The latter are shown

[1] See Section A3 (in the Annex), Acceptance, for further information concerning acceptance, testing of the material shipped, and the ANSI/AWS A5.01, *Filler Metal Procurement Guidelines*.

[2] AWS standards can be obtained from the American Welding Society, 550 N.W. LeJeune Road, Miami, FL 33126.

[3] See Section A4 (in the Annex), Certification, for further information concerning certification and the testing called for to meet this requirement.

TABLE 1
CHEMICAL COMPOSITION REQUIREMENTS FOR SOLID ELECTRODES

AWS Classification[c]	UNS Number[d]	Weight-Percent[a,b]												Other Elements, Total
		C	Mn	P	S	Si	Ni	Cr	Mo	Cu[e]	Ti	Zr	Al	
Medium-Manganese Classes														
EM5K-EW	K10726	0.07	0.90–1.40	0.025	0.030	0.40–0.70	—	—	—	0.35	0.05–0.15	0.02–0.12	0.05–0.15	0.50
EM12-EW	K01112	0.06–0.15	0.80–1.25	0.030	0.030	0.10	—	—	—	0.35	—	—	—	0.50
EM12K-EW	K01113	0.05–0.15	0.80–1.25	0.030	0.030	0.10–0.35	—	—	—	0.35	—	—	—	0.50
EM13K-EW	K01313	0.06–0.16	0.90–1.40	0.030	0.030	0.35–0.75	—	—	—	0.35	—	—	—	0.50
EM15K-EW	K01515	0.10–0.20	0.80–1.25	0.030	0.030	0.10–0.35	—	—	—	0.35	—	—	—	0.50
High-Manganese Classes														
EH14-EW	K11585	0.10–0.20	1.70–2.20	0.030	0.030	0.10	—	—	—	0.35	—	—	—	0.50
Special Classes														
EWS-EW	K11245	0.07–0.12	0.35–0.65	0.030	0.030	0.22–0.37	0.40–0.75	0.50–0.80	—	0.25–0.55	—	—	—	0.50
EA3K-EW[f]	K10945	0.07–0.12	1.60–2.10	0.025	0.025	0.50–0.80	0.15	—	0.40–0.60	0.35	—	—	—	0.50
EH10K-EW	K01010	0.07–0.14	1.40–2.00	0.025	0.030	0.15–0.30	—	—	—	—	—	—	—	0.50
EH11K-EW	K11140	0.06–0.15	1.40–1.85	0.025	0.030	0.80–1.15	—	—	—	0.35	—	—	—	0.50
ES-G-EW	—	NOT SPECIFIED[g]												

NOTES:
a. The electrode shall be analyzed for the specific elements for which values are shown in this table. If the presence of other elements is indicated, in the course of this work, the amount of those elements shall be determined to ensure that their total (excluding iron) does not exceed the limit specified for "Other Elements, Total" in the last column of the table.
b. Single values are maximums.
c. Chemical composition requirements may be similar to those in other AWS specifications; see Table A1 in the Annex.
d. SAE/ASTM Unified Numbering System for Metals and Alloys.
e. The copper limit includes copper that may be applied as a coating on the electrode.
f. Formerly classified EH10Mo-EW in ANSI/AWS A5.25-91.
g. Composition shall be reported; the requirements are those agreed to by the purchaser and the supplier.

TABLE 2
CHEMICAL COMPOSITION REQUIREMENTS FOR WELD METAL FROM COMPOSITE METAL CORED ELECTRODES[a]

AWS Classification	UNS Number[d]	Weight Percent[b,c]										Other Elements, Total
		C	Mn	P	S	Si	Ni	Cr	Mo	Cu	V	
EWT1	W06040	0.13	2.00	0.03	0.03	0.60	—	—	—	—	—	0.50
EWT2	W20140	0.12	0.50–1.60	0.03	0.04	0.25–0.80	0.40–0.80	0.40–0.70	—	0.25–0.75	—	0.50
EWT3	W22340	0.12	1.00–2.00	0.02	0.03	0.15–0.50	1.50–2.50	0.20	0.40–0.65	—	0.05	0.50
EWTG	—	NOT SPECIFIED[e]										

NOTES:
a. The flux used, when classifying composite electrodes shall be one with which the electrode is classified for mechanical properties (see Tables 3 or 3M and 4 or 4M).
b. The weld metal shall be analyzed for the specific elements for which values are shown in this table. If the presence of other elements is indicated, in the course of this work, the amount of those elements shall be determined to ensure that their total (excluding iron) does not exceed the limit specified for "Other Elements, Total" in the last column of the table.
c. Single values are maximums.
d. SAE/ASTM Unified Numbering System for Metals and Alloys.
e. Composition shall be reported; the requirements are those agreed to by the purchaser and supplier.

TABLE 3
A5.25 TENSION TEST REQUIREMENTS (AS-WELDED)

AWS A5.25 Classification[a]	Tensile Strength, psi	Yield Strength, min.[b], psi	Elongation, min.[b], percent
FES6Z-XXX FES60-XXX FES62-XXX	60 000 to 80 000	36 000	24
FES7Z-XXX FES70-XXX FES72-XXX	70 000 to 95 000	50 000	22
FES8Z-XXX FES80-XXX FES82-XXX	80 000 to 100 000	60 000	20

NOTES:
a. The letters "XXX" as used in the AWS Classification column in this table refer to the electrode classification used.
b. Yield strength at 0.2 percent offset and elongation in 2 in. (51 mm) gage length.

in appropriate columns in tables or within brackets [] when used in the text.

5.2 For the purpose of determining conformance with this specification, an observed or calculated value shall be rounded to the nearest 1000 psi [10 MPa] for tensile and yield strength, and to the "nearest unit" in the last right-hand place of figures used in expressing the limiting value for other quantities in accordance with the rounding-off method given in ASTM E29, *Standard Practice for Using Significant Digits in Test Data to Determine Conformance with Specifications*.[4]

[4] ASTM standards can be obtained from the American Society for Testing and Materials, 100 Barr Harbor Drive, West Conshohocken, PA 19428-2959.

PART B — TESTS, PROCEDURES, AND REQUIREMENTS

6. Summary of Tests

6.1 Chemical analysis of solid electrodes is the only test required for classification of a solid electrode under this specification, as shown in Table 5.

6.2 Chemical analysis of undiluted weld metal from the composite electrode and a specific flux of a particular manufacturer and trade designation is the only test required for classification of a composite electrode under this specification, as shown in Table 5.

6.3 The tests required for classification of each electrode/flux combination are specified in Table 5.

TABLE 3M
A5.25M TENSION TEST REQUIREMENTS (AS WELDED)

AWS A5.25M Classification[1]	Tensile Strength MPa	Yield Strength, min.[2] MPa	Elongation, min.[2] Percent
FES43Z-XXX FES432-XXX FES433-XXX	430 to 550	250	24
FES48Z-XXX FES482-XXX FES483-XXX	480 to 650	350	22
FES55Z-XXX FES552-XXX FES553-XXX	550 to 700	410	20

NOTES:
(1) The letters "XXX" as used in the AWS A5.25M Classification column in this table refer to the electrode classification used.
(2) Yield strength at 0.2 percent offset and elongation in 50 mm gage length.

TABLE 4
A5.25 IMPACT TEST REQUIREMENTS[a] (AS WELDED)

AWS A5.25 Classification[b]	Average Impact Strength, min.[c] ft·lbf
FES6Z-XXX FES7Z-XXX FES8Z-XXX	Not specified Not specified Not specified
FES60-XXX FES70-XXX FES80-XXX	15 @ 0°F 15 @ 0°F 15 @ 0°F
FES62-XXX FES72-XXX FES82-XXX	15 @ −20°F 15 @ −20°F 15 @ −20°F

NOTES:
a. A flux-electrode combination that meets impact requirements at a given temperature also meets the requirements at all higher temperatures in this table. In this manner, FESX2-XXX may also be classified as FESX0-XXX and FESXZ-XXX and FESX0-XXX may be classified as FESXZ-XXX.
b. The letters "XXX" used in the AWS Classification column in this table refer to the electrode classification used.
c. Both the highest and lowest of the five test values obtained shall be disregarded in computing the impact strength. Two of the remaining three values shall equal or exceed 15 ft·lbf and one of the three remaining values may be lower than 15 ft·lbf but not lower than 10 ft·lbf. The average of the three shall not be less than the 15 ft·lbf specified.

TABLE 4M
A5.25M IMPACT TEST REQUIREMENTS (AS WELDED)[1]

AWS A5.25M Classification[2]	Average Impact Strength, min.[3] J
FES43Z-XXX FES48Z-XXX FES55Z-XXX	Not specified Not specified Not specified
FES432-XXX FES482-XXX FES552-XXX	20 @ −20°C 20 @ −20°C 20 @ −20°C
FES433-XXX FES483-XXX FES553-XXX	20 @ −30°C 20 @ −30°C 20 @ −30°C

NOTES:
(1) A flux-electrode combination that meets impact requirements at a given temperature also meets the requirements at all higher temperatures in this table. In this manner, FESXX3-XXX may also be classified as FESXX2-XXX and FESXXZ-XXX and FESXX2-XXX may be classified as FESXXZ-XX.
(2) The letters "XXX" used in the AWS Classification column in this table refer to the electrode classification used.
(3) Both the highest and lowest of the five test values obtained shall be disregarded in computing the impact strength. Two of the remaining three values shall equal or exceed 20 J and one of the three remaining values may be lower than 20 J, but not lower than 14 J. The average of the three shall not be less than the 20 J specified.

The purpose of these tests is to determine the mechanical properties and soundness of the weld. The base metal for the weld test assemblies, the welding and testing procedures to be employed, and the results required are given in Sections 8 through 12.

7. Retest

If the results of any test fail to meet the requirement, that test shall be repeated twice. The results of both retests shall meet the requirement. Specimens for retest may be taken from the original test assembly or from one or two new test assemblies. For chemical analysis, retest need be only for those specific elements that failed to meet the test requirement.

If the results of one or both retests fail to meet the requirement, the material under test shall be considered as not meeting the requirements of this specification for that classification.

In the event that, during preparation or after completion of any test, it is clearly determined that prescribed or proper procedures were not followed in preparing the weld test assembly or test specimens or in conducting the test, the test shall be considered invalid without

TABLE 5
REQUIRED TESTS

Material to be Classified	AWS Classification[a]	Chemical Analysis		Radiographic Test	Tension Test	Impact Test
		Electrode	Weld Metal			
Solid Electrodes	All	Required	Not Required	Not Required	Not Required	Not Required
Composite Electrodes[b]	All	Not Required	Required	Not Required	Not Required	Not Required
Fluxes	FES6Z-XXX FES7Z-XXX FES8Z-XXX FES43Z-XXX FES48Z-XXX FES55Z-XXX	Not Required	Not Required	Required	Required	Not Required
	FES60-XXX FES70-XXX FES80-XXX FES432-XXX FES482-XXX FES552-XXX	Not Required	Not Required	Required	Required	Required
	FES62-XXX FES72-XXX FES82-XXX FES433-XXX FES483-XXX FES553-XXX	Not Required	Not Required	Required	Required	Required

NOTES:
a. The letters "XXX" used in the AWS Classification column in this table refer to the electrode classification used.
b. The flux used when classifying composite electrodes shall be one with which the electrode is classified for mechanical properties.

regard to whether the test was actually completed, or whether test results met, or failed to meet, the requirement. That test shall be repeated, following prescribed procedures. In this case, the requirement for doubling of the number of test specimens does not apply.

8. Weld Test Assemblies

8.1 No weld test assemblies are required for classification of solid electrodes. One weld test assembly is required for classification of composite electrodes. It is the weld ingot as shown in Fig. 1, for chemical analysis of weld metal. In addition to the above, one weld test assembly is required for each classification of an electrode-flux combination. This is the groove weld in Fig. 2 for mechanical properties and soundness of the weld metal in the as-welded condition.

8.2 Preparation of each weld test assembly shall be as prescribed in 8.3, 8.4, and 9.2. The base metal for each assembly shall be as required in Table 6 and shall meet the requirements of the appropriate ASTM specification shown there, or an equivalent specification. Testing of the assemblies shall be as prescribed in 9.3 and Sections 10 through 12.

8.3 Weld Ingot. An ingot shall be prepared as specified in Fig. 1.

8.4 Groove Weld for Mechanical Properties and Soundness for Flux-Electrode Combinations. A test assembly shall be chosen and welded as specified in Fig. 2 using base metal of the appropriate type specified in Table 6. Testing of this assembly shall be as specified in Sections 10 through 12. The assembly shall be tested in the as-welded condition.

9. Chemical Analysis

9.1 For solid electrodes, a sample of the electrode shall be prepared for chemical analysis. Solid electrodes, when analyzed for elements that are present in a coating

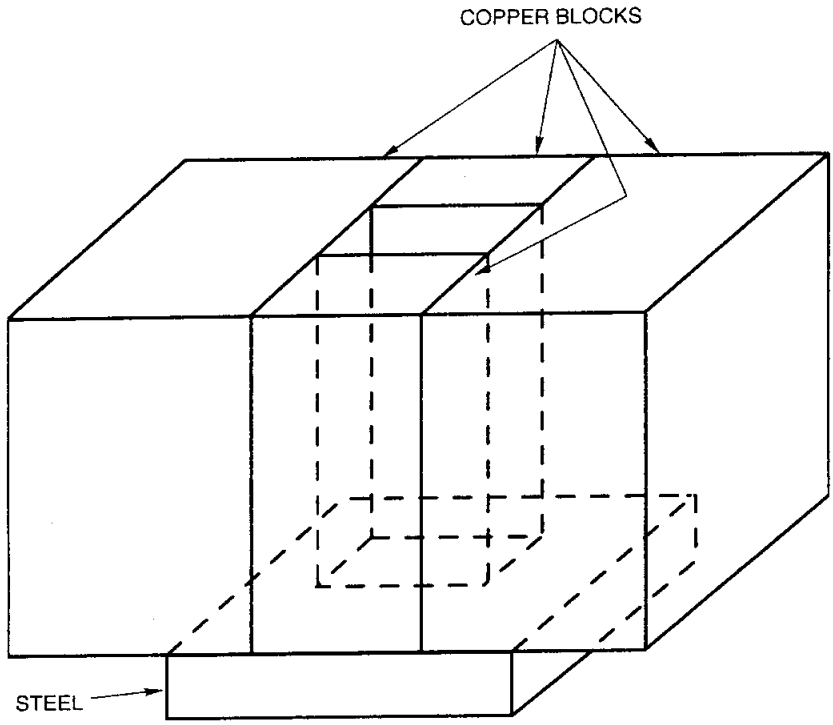

NOTES:
(1) Weld ingot shall be deposited by arc welding in a water-cooled copper mold using welding conditions shown in Figure 2.
(2) Weld ingot shall be of any convenient shape that provides approximately 4 in.^{2} [25 cm^2] of weld metal cross-section.
(3) The weld ingot shall be started on a piece of carbon steel of sufficient size as to avoid complete fusion, and the copper mold shall be a sufficient heat sink to avoid contamination of the ingot by molten copper.
(4) The sample for chemical analysis shall be taken at least 2 in. [50 mm] above the bottom of the ingot, and at least 2 in. [50 mm] below the crater.
(5) Consumable guide tubes shall be used for preparing the weld ingot if guide tubes were used in welding the groove weld test assembly, as use of consumable guide tubes will affect chemical composition.

FIG. 1 WELD INGOT

(copper flashing, for example), shall be analyzed without removing the coating. When the electrode is analyzed for elements other than those in the coating, the coating must be removed if its presence affects the results of the analysis for other elements.

9.2 Composite electrodes shall be analyzed in the form of undiluted weld metal, not electrode. The sample for analysis shall be taken from weld metal obtained with the electrode and a specific flux of a particular manufacturer and trade designation with which it was classified. The sample shall come from an ingot (Fig. 1). The top surface of the ingot shall be removed and discarded, and a sample for analysis shall be obtained by any appropriate mechanical means from the underlying metal at a location at least 2 in. [50 mm] from the start of the ingot and at least 1 in. [25 mm] from the end. The sample shall be free of slag.

9.3 The sample shall be analyzed by accepted analytical methods. The referee method shall be ASTM Standard Method E350, *Chemical Analysis of Carbon Steel, Low-Alloy Steel, Silicon Electrical Steel, Ingot Iron and Wrought Iron.*

9.4 The results of the analysis shall meet the requirements of Table 1 for solid electrodes or Table 2 for composite electrodes, for the classification of electrode under test.

10. Radiographic Test

10.1 The groove weld described in 8.4 and shown in Fig. 2 shall be radiographed to evaluate the soundness of the weld metal. In preparation for radiography, both surfaces of the weld may be machined or ground smooth and flush with the original surfaces of the base

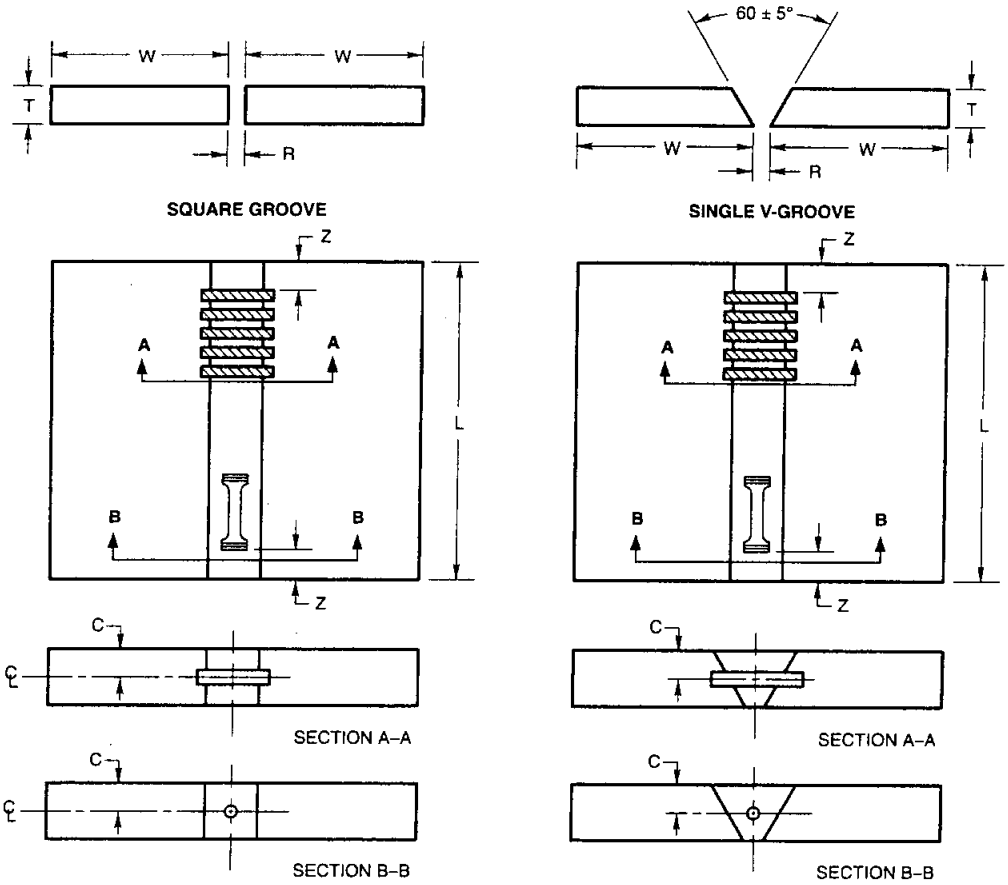

Groove Type:	Square Groove		Square Groove		Single V-Groove	
Consumable Guide Tube:	Yes		No		No	
	in.	mm	in.	mm	in.	mm
Electrode Size:	3/32 or 1/8	2.4, 2.5, or 3.0	3/32 or 1/8	2.4, 2.5, or 3.0	3/32 or 1/8	2.4, 2.5, or 3.0
Dimensions:						
L, Length, min.	15	380	15	380	15	380
W, Width, min.	12	300	12	300	12	300
T, Thickness	2	50	2	50	2	25
Z, Discard, min.	2-1/2	65	2-1/2	65	2-1/2	65
R, Root Opening	1 to 1-1/4	25 to 32	1 to 1-1/4	25 to 32	1/4 min.	6 min.
C, Distance to the Center of Specimen	1/2	12.5	1/2	12.5	3/8	9.5
Current, dcep:						
Amperes	500 ± 50		500 ± 50		400 ± 50	
Volts	40 ± 2		40 ± 2		40 ± 2	

GENERAL NOTES:

(a) Weld test assembly shall be welded in the vertical position with upward progression.

b. The test assembly shall be chosen and fixtured based on the manufacturer's recommendations. Water-cooled copper shoes shall be used except when using consumable guide tubes. For welding with consumable guide tubes, follow the manufacturer's recommendations regarding the use of water-cooled shoes. When using water cooling, the outgoing water temperature shall not exceed 180°F [82°C] near the exit point.

(c) If the manufacturer does not make the electrode size specified, the nearest size may be used. For sizes other than that shown, follow the manufacturer's recommended procedure.

(d) Welding shall begin with the assembly at room temperature, 65°F [18°C] minimum. No external heat shall be applied during welding. Run-on and run-off tabs are not required if the test assembly is of sufficient length to provide the required test specimens.

(e) The weld shall be completed in one pass.

(f) No thermal treatment shall be performed on the assembly subsequent to the completion of welding.

FIG. 2 GROOVE WELD TEST ASSEMBLY FOR MECHANICAL PROPERTIES AND SOUNDNESS

TABLE 6
BASE METALS FOR TEST ASSEMBLIES

AWS Classification		ASTM
A5.25	A5.25M	Base Metal Specification
FES6X-XXX	FES43X-XXX	ASTM A36
FES7X-XXX	FES48X-XXX	ASTM A242 Type 2 or A572 Grade 50
FES8X-XXX	FES55X-XXX	ASTM A537 Class 2, A572 Grade 60 or 65, or A633 Grade E
The following classifications are exceptions to the above general requirements:		
FESXX-EWS-EW FESXX-EWT2	FESYYY-EWS-EW FESYYY-EWT2	ASTM A588

metal or with a uniform reinforcement not exceeding $^{3}/_{32}$ in. [2.5 mm]. Both surfaces of the test assembly, in the area of the weld, shall be smooth enough to avoid difficulty in interpreting the radiograph.

10.2 The weld shall be radiographed in accordance with ASTM E142, *Standard Method for Controlling Quality of Radiographic Testing*. The quality level of inspection shall be 2-2T.

10.3 The soundness of the weld metal meets the requirements of this specification if the radiograph shows no cracks, no incomplete fusion, and no rounded indications in excess of those permitted by the radiographic standards in Fig. 4.

In evaluating the radiograph, 2-$^{1}/_{2}$ in. [65 mm] of the weld on each end of the test assembly shall be disregarded.

A rounded indication is an indication (on the radiograph) whose length is no more than three times its width. Rounded indications may be circular, elliptical, conical, or irregular in shape, and they may have tails. The size of a rounded indication is the largest dimension of the indication, including any tail that may be present. The indication may be of porosity or slag. Indications whose largest dimension does not exceed $^{1}/_{64}$ in. [0.4 mm] shall be disregarded. Test assemblies with indications greater than the largest indications permitted in the radiographic standards do not meet the requirements of this specification.

11. Tension Test

11.1 One all-weld-metal tension test specimen shall be machined from the groove weld described in 8.4 and shown in Fig. 2. The dimensions of the specimen shall be as shown in Fig. 3.

11.2 The specimen shall be tested in the manner described in the tension test section of ANSI/AWS B4.0, *Standard Methods for Mechanical Testing of Welds*.

11.3 The results of the tension test shall meet the requirements specified in Table 3, or Table 3M, as applicable.

12. Impact Test

12.1 Five Charpy V-notch impact test specimens (Fig. 5) shall be machined from the test assembly shown in Fig. 2, for those flux-electrode classifications for which impact testing is required in Table 5. The five specimens shall be tested in accordance with the fracture toughness test section of ANSI/AWS B4.0, *Standard Methods for Mechanical Testing of Welds*. The test temperature and the test results shall be those specified in Table 4 or Table 4M, as applicable, for the classification under test.

12.2 In evaluating the test results, the lowest and the highest values obtained shall be disregarded. Two of the remaining three values shall equal, or exceed, the specified 15 ft·lbf [20 J] energy level. One of the three may be lower, but not lower than 10 ft·lbf [14 J], and the average of the three shall be not less than the required 15 ft·lbf [20 J] energy level.

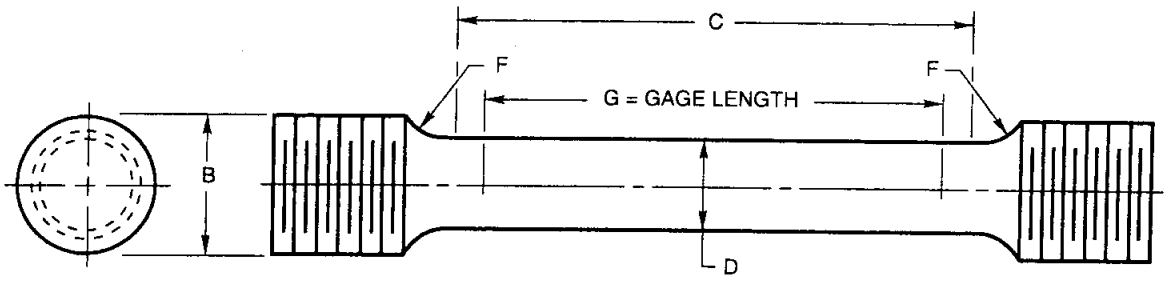

Dimensions of Specimen, in.					Approximate Area, in.^{2}
D	G	C	B	F, min.	
0.500 ± 0.010	2.000 ± 0.005	2-1/4	3/4	0.375	0.2
Dimensions of Specimen, mm					Approximate Area, mm^2
D	G	C	B	F, min.	
12.5 ± 0.2	50.0 ± 0.1	55	20	10	123

GENERAL NOTES:
(1) Dimensions G and C shall be as shown, but ends may be of any shape to fit the testing machine holders as long as the load is axial.
(2) The diameter of the specimen within the gage length shall be slightly smaller at the center (controlling dimension) than at the ends. The difference shall not exceed one percent of the diameter.
(3) When the extensometer is required to determine yield strength, dimension C may be modified. However, the percent of the elongation shall be based on dimension G.
(4) The surface finish within the C dimension shall be no rougher than 63 μin. [1.6 μm].

FIG. 3 TENSION TEST SPECIMEN

PART C — MANUFACTURE, IDENTIFICATION, AND PACKAGING

13. Method of Manufacture

The welding materials classified according to this specification may be manufactured by any method that will produce material that meets the requirements of this specification.

14. Electrode Requirements

14.1 Standard Sizes. Standard sizes for electrodes in the different package forms (coils with support, coils without support, spools and drums) are shown in Table 7.

14.2 Finish and Uniformity

14.2.1 All electrodes shall have a smooth finish that is free from slivers, depressions, scratches, scale, seams or laps (exclusive of the longitudinal joint in cored electrodes), and foreign matter that would adversely affect the welding characteristics, the operation of the welding equipment or the properties of the weld metal.

14.2.2 Each continuous length of electrode shall be from a single lot of material, and welds, when present, shall have been made so as not to interfere with the uniform, uninterrupted feeding of the electrode on automatic equipment.

14.2.3 The core ingredients in composite electrodes shall be distributed with sufficient uniformity throughout the length of the electrode so as not to adversely affect the performance of the electrode or the properties of the weld metal.

14.2.4 A suitable protective coating may be applied to any of the electrodes in this specification.

14.3 Standard Package Forms

14.3.1 Standard package forms are coils with support, coils without support, spools, and drums. Standard package dimensions and weights for each form are given in Table 8 and Fig. 6. Package forms, sizes and

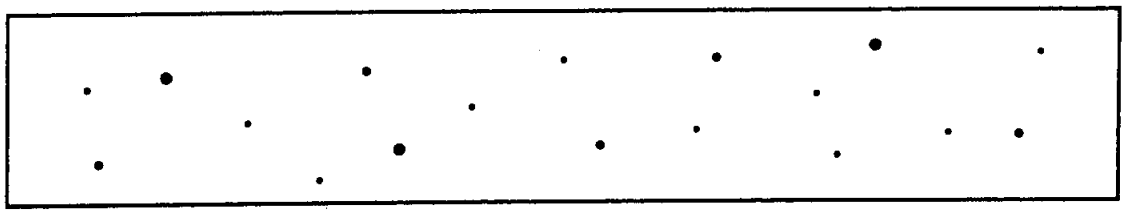

(A) ASSORTED ROUNDED INDICATIONS

SIZE 1/64 in. TO 1/16 in. [0.4 TO 1.6 mm] DIAMETER OR IN LENGTH.
MAXIMUM NUMBER OF INDICATIONS IN ANY 6 in. [150 mm] OF WELD = 18, WITH THE FOLLOWING RESTRICTIONS:
MAXIMUM NUMBER OF LARGE 3/64 TO 1/16 in. [1.2 TO 1.6 mm] DIAMETER AND/OR LENGTH INDICATIONS = 3.
MAXIMUM NUMBER OF MEDIUM 1/32 TO 3/64 in. [0.8 TO 1.2 mm] DIAMETER AND/OR LENGTH INDICATIONS = 5.
MAXIMUM NUMBER OF SMALL 1/64 TO 1/32 in. [0.4 TO 0.8 mm] DIAMETER AND/OR LENGTH INDICATIONS = 10.

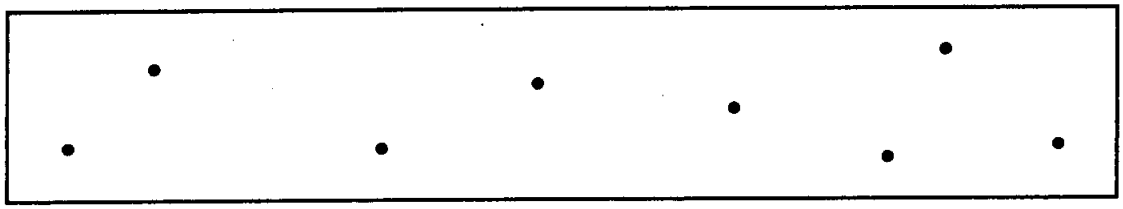

(B) LARGE ROUNDED INDICATIONS

SIZE 3/64 TO 1/16 in. [1.2 TO 1.6 mm] DIAMETER AND/OR LENGTH.
MAXIMUM NUMBER OF INDICATIONS IN ANY 6 in. [150 mm] OF WELD = 8.

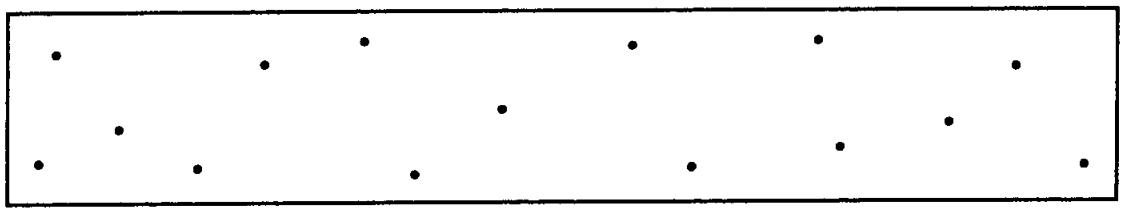

(C) MEDIUM ROUNDED INDICATIONS

SIZE 1/32 TO 3/64 in. [0.8 TO 1.2 mm] DIAMETER AND/OR LENGTH.
MAXIMUM NUMBER OF INDICATIONS IN ANY 6 in. [150 mm] OF WELD = 15.

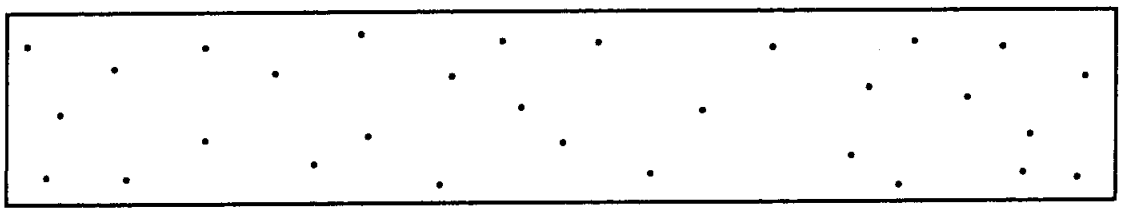

(D) SMALL ROUNDED INDICATIONS

SIZE 1/64 TO 1/32 in. [0.4 TO 0.8 mm] DIAMETER AND/OR LENGTH.
MAXIMUM NUMBER OF INDICATIONS IN ANY 6 in. [150 mm] OF WELD = 30.

GENERAL NOTES:
(1) In using these standards the chart which is most representative of the size of the porosity and/or inclusions present in the test specimen radiograph shall be used for determining conformance to these radiographic standards.
(2) Since these are test welds specifically made in the laboratory for classification purposes, the radiographic requirements for these test welds are more rigid than those which may be required for general fabrication.
(3) Indications smaller than $^{1}/_{64}$ in. [0.4 mm] shall be disregarded.

FIG. 4 RADIOGRAPHIC ACCEPTANCE STANDARDS

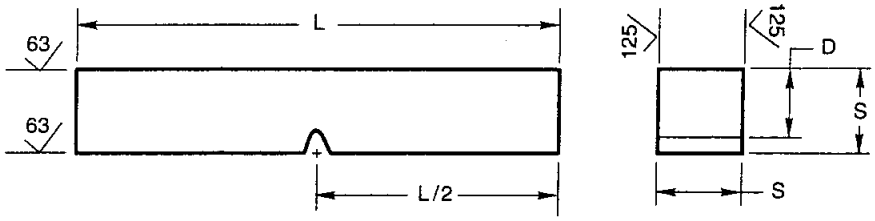

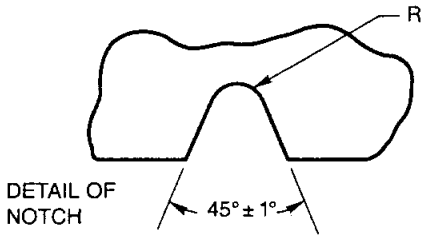

DIMENSIONS	in.	mm
L, LENGTH	2.165 +0, −0.100	55 +0, −2.5
S, SECTION	0.394 ±0.001	10 ±0.025
D, DEPTH UNDER NOTCH	0.315 ±0.001	8 ±0.025
R, NOTCH RADIUS	0.010 ±0.001	0.25 ±0.025
L/2, MID-LENGTH TOLERANCE	±0.039	±0.1

NOTES:
(1) The notched surface and the surface to be struck shall be parallel within 0.002 in. [0.05 mm] and have at least 63 μin. [1.6 μm] finish. The other two surfaces shall be square with the notched or struck surface within ±10 minutes of a degree and have at least 125 μin. [3.2 μm] finish.
(2) The notch shall be smoothly cut by mechanical means and shall be square with the longitudinal edge of the specimen within one degree.
(3) The geometry of the notch shall be measured on at least one specimen in a set of five specimens. Measurement shall be done at minimum 50 times magnification on either a shadowgraph or a metallograph.
(4) The correct location of the notch shall be verified by etching before or after machining.
(5) If a specimen does not break upon being struck, the value for energy absorbed shall be reported as the capacity of the impact testing machine followed by a plus sign (+).

FIG. 5 CHARPY V-NOTCH IMPACT TEST SPECIMEN

TABLE 7
STANDARD SIZES*

	A5.25				A5.25M		
	Diameter		Tolerance		Diameter	Tolerance	
Standard Package Forms	in.		Solid in.	Cored in.	mm	Solid mm	Cored mm
Coils with support,	1/16	0.062	±0.002	±0.002	1.6	±0.05	±0.05
Coils without support,	5/64	0.078	±0.002	±0.003	2.0	±0.05	±0.08
Drums, and Spools	3/32	0.094	±0.002	±0.003	2.4	±0.05	±0.08
					2.5	±0.05	±0.08
		0.120	±0.003	±0.003	3.0	±0.08	±0.08
	1/8	0.125	±0.003	±0.003	3.2	±0.08	±0.08
	5/32	0.156	±0.003	±0.003	4.0	±0.08	±0.08

* Dimensions, tolerances, and package forms other than those shown shall be as agreed between purchaser and supplier.

TABLE 8
STANDARD PACKAGE DIMENSIONS AND WEIGHTS[a]

Type of Package	Package Size OD[d] in.	Package Size OD[d] mm	Net Weight of Electrode[b] lb	Net Weight of Electrode[b] kg
Coils without support	Not specified[c]		Not specified[c]	
Spools	12	300	25, 30, and 35	10 and 15
	14	350	50 and 60	20 and 25
	22	560	250	100
	24	610	300	150
	30	760	600, 750 and 1000	250, 350 and 450
Drums	15½	400	Not specified (c)	
	20	500	Not specified (c)	
	23	600	300 and 600	150 and 300

Coils with Support — Standard Dimensions and Weights

Electrode Size	Coil Net Weight[b] lb	Coil Net Weight[b] kg	Coil Dimensions: Inside Dia. of Lining in.	Coil Dimensions: Inside Dia. of Lining mm	Coil Dimensions: Width of Wound Electrodes in., max.	Coil Dimensions: Width of Wound Electrodes mm, max.
All	50, 60, and 65	20, 25, and 30	12 ± ⅛	300 +3, −10	4⅝	120
	150 and 200	75 and 100	23½ ± ¼	600 +3, −10	5	125

NOTES:
a. Package sizes, dimensions, and net weights other than those specified shall be as agreed between supplier and purchaser.
b. Tolerance on net weight shall be ± 10 percent.
c. As agreed by supplier and purchaser.
d. OD = outside diameter.

weights other than these shall be as agreed between purchaser and supplier.

14.3.2 The liners in coils with support shall be designed and constructed to prevent distortion of the coil during normal handling and use, and shall be clean and dry enough to maintain the cleanliness of the electrode.

14.3.3 Spools shall be designed and constructed to prevent distortion of the electrode during normal handling and use and shall be clean and dry enough to maintain the cleanliness of the electrode.

14.4 Winding Requirements

14.4.1 Electrodes shall be wound so that kinks, waves, sharp bends, overlapping, or wedging are not encountered, leaving the electrode free to unwind without restriction. The outside end of the electrode (the end with which welding is to begin) shall be identified so it can be located readily, and shall be fastened to avoid unwinding.

14.4.2 The cast and helix of electrode in coils, spools, and drums shall be such that the electrode will feed in an uninterrupted manner on automatic equipment.

14.5 Electrode Identification

14.5.1 The product information and the precautionary information required in 14.7 for marking each package shall also appear on each coil, spool, and drum.

14.5.2 Coils without support shall have a tag containing this information securely attached to the electrode at the inside end of the coil.

14.5.3 Coils with support shall have the information securely affixed in a prominent location on the support.

14.5.4 Spools shall have the information securely affixed in a prominent location on the outside of at least one flange of the spool.

14.5.5 Drums shall have the information securely affixed in a prominent location on the side of the drum.

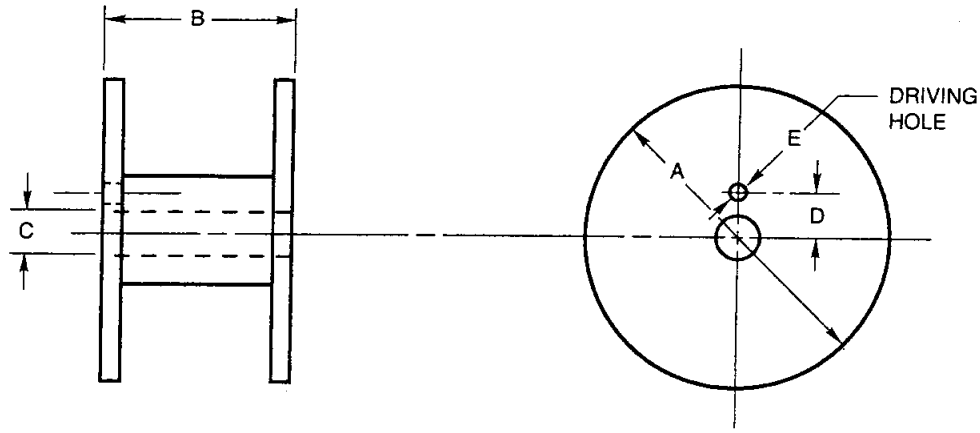

DIMENSIONS

		12 in. [300 mm] Spools		14 in. [350 mm] Spools	
		in.	mm	in.	mm
A	Diameter, max.	12	300	14	350
B	Width	4.0 ± 0.06	103 –3, +0	4.0 ± 0.06	103 –3, +0
C	Diameter	2.03 –0, +0.06	50.5 –0, +2.5	2.03 –0, +0.06	50.5 –0, +2.5
D	Distance Between Axes	1.75 ± 0.02	44.5 ± 0.5	1.75 ± 0.02	44.5 ± 0.5
E	Diameter (Note 3)	0.44 ± 0.06	10 –0, +1	0.44 ± 0.06	10 –0, +1

GENERAL NOTES:
(1) Outside diameter of barrel shall be such as to permit feeding of the filler metals.
(2) Inside diameter of the barrel shall be such that swelling of the barrel or misalignment of the barrel and flanges will not result in the inside of the diameter of the barrel being less than the inside diameter of the flanges.
(3) Holes are provided on each flange, but they need not be aligned.

FIG. 6A DIMENSIONS OF 12 AND 14 IN. [300 AND 350 MM] STANDARD SPOOLS

14.6 Packaging. Electrodes shall be suitably packaged to ensure against damage during shipment and storage under normal conditions.

14.7 Marking of Packages

14.7.1 The following product information (as a minimum) shall be legibly marked so as to be visible from the outside of each unit package.

(a) AWS Specification and Classification (year of issue may be excluded)

(b) Supplier's name and trade designation. In the case of a composite metal cored electrode, the trade designation of the flux (or fluxes) with which it meets the requirements of Table 2.

(c) Size and net weight

(d) Lot, control, or heat number

14.7.2 The following precautionary information (as a minimum) shall be prominently displayed in legible print on all packages of electrodes including individual unit packages enclosed within a larger package.

WARNING:

PROTECT yourself and others. Read and understand this information.

FUMES AND GASES can be hazardous to your health.

ARC RAYS can injure eyes and burn skin.

ELECTRIC SHOCK can KILL.

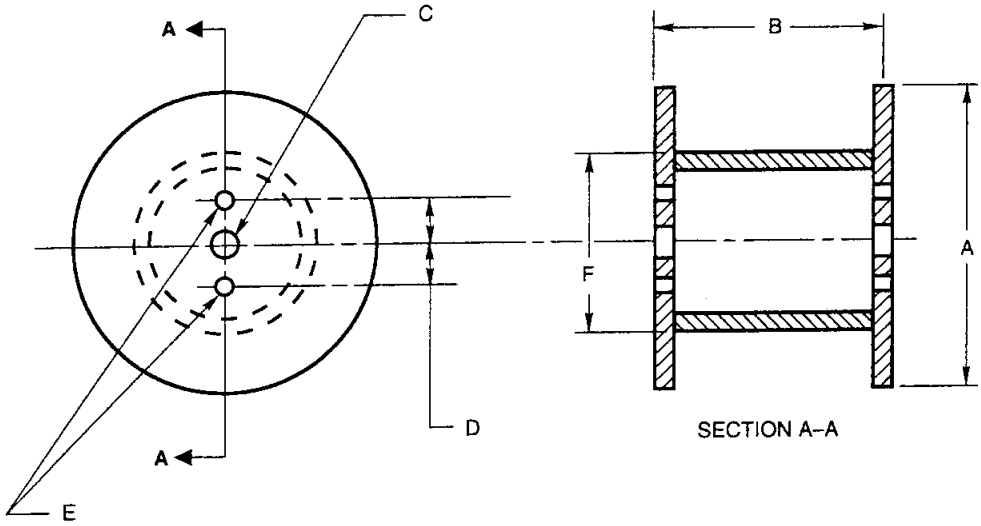

DIMENSIONS

		22 in. [560 mm] Spools		24 in. [610 mm] Spools		30 in. [760 mm] Spools	
		in.	mm	in.	mm	in.	mm
A	Diameter, max.	22	560	24	610	30	760
B	Width, max.	12	305	13.5	345	13.5	345
C	Diameter	1.31 +0.13, –0	35.0 ± 1.5	1.31 +0.13, –0	35.0 ± 1.5	1.31 +0.13, –0	35.0 ± 1.5
D	Distance, Ctr. to Ctr.	2.5 ± 0.1	63.5 ± 1.5	2.5 ± 0.1	63.5 ± 1.5	2.5 ± 0.1	63.5 ± 1.5
E	Diameter (Note 3)	0.69 +0, –0.06	16.7 ± 0.7	0.69 +0, –0.06	16.7 ± 0.7	0.69 +0, –0.06	16.7 ± 0.7

GENERAL NOTES:
(1) Outside diameter of barrel, dimension F, shall be such as to permit feeding of the filler metals.
(2) Inside diameter of the barrel shall be such that swelling of the barrel or misalignment of the barrel and flanges will not result in the inside of the diameter of the barrel being less than the inside diameter of the flanges.
(3) Two holes are provided on each flange and shall be aligned on both flanges with the center hole.

FIG. 6B DIMENSIONS OF 22, 24, AND 30 IN. [560, 610, AND 760 MM] STANDARD SPOOLS (REELS)

- Read and understand the manufacturer's instructions, the Material Safety Data Sheets (MSDSs), and your employer's safety practices.
- Keep your head out of the fumes.
- Use enough ventilation, exhaust at the arc, or both, to keep fumes and gases away from your breathing zone and the general area.
- Wear correct eye, ear, and body protection.
- Do not touch live electrical parts.
- See American National Standard ANSI/ASC Z49.1, *Safety in Welding, Cutting, and Allied Processes,* published by the American Welding Society, 550 N.W. LeJeune Road, Miami, FL 33126; and OSHA Safety and Health Standards, 29 CFR 1910, available from the U.S. Government Printing Office, Washington, DC 20402.

DO NOT REMOVE THIS INFORMATION

15. Flux Requirements

15.1 Form and Particle Size. Flux shall be granular in form and shall be capable of flowing freely through the flux feeding tubes, valves, and nozzles of standard electroslag welding equipment. Particle size is not speci-

fied in this specification, but, when it is addressed, it shall be a matter of agreement between the purchaser and the supplier.

15.2 Usability. The flux shall permit the production of uniform, well-shaped weld beads that merge smoothly with the base metal. The molten slag shall have electrical properties suitable for electroslag operation.

15.3 Packaging

15.3.1 Flux shall be suitably packaged to ensure against damage during shipment.

15.3.2 Flux, in its original unopened container, shall withstand storage under normal conditions for at least six months without damage to its welding characteristics or the properties of the weld. Heating of the flux to assure dryness may be necessary to obtain the very best operation and properties of which the materials are capable. When drying (reconditioning) is necessary, the supplier should be consulted for a recommended procedure.

15.4 Marking of Packages

15.4.1 The following product information (as a minimum) shall be legibly marked so as to be visible from the outside of each unit package.

(a) AWS specification and classification for the appropriate flux-electrode combination (year of issue may be excluded)

(b) Supplier's name and trade designation (brand name)

(c) The trade designation of each composite electrode with which the flux manufacturer has classified the flux, if applicable

(d) Net weight

(e) Lot or control number

(f) Particle size, if more than one size is produced

15.4.2 The following precautionary information (as a minimum) shall be prominently displayed in legible print on all packages of welding material, including individual unit packages enclosed within a larger package:

WARNING:

PROTECT yourself and others. Read and understand this information.

FUMES AND GASES can be hazardous to your health.

ARC RAYS can injure eyes and burn skin.

ELECTRIC SHOCK can KILL.

- Read and understand the manufacturer's instructions, the Material Safety Data Sheets (MSDSs), and your employer's safety practices.
- Keep your head out of the fumes.
- Use enough ventilation, exhaust at the arc, or both to keep fumes and gases away from your breathing zone and the general area.
- Wear correct eye, ear, and body protection.
- Do not touch live electrical parts.
- See American National Standard ANSI/ASC Z49.1, *Safety in Welding, Cutting, and Allied Processes*, published by the American Welding Society, 550 N.W. LeJeune Road, Miami, FL 33126; and OSHA Safety and Health Standards, *29 CFR 1910*, available from the U.S. Government Printing Office, Washington, DC 20402.

DO NOT REMOVE THIS INFORMATION

Annex
Guide to AWS Specification for Carbon and Low-Alloy Steel Electrodes and Fluxes for Electroslag Welding

(This Annex is not a part of ANSI/AWS A5.25/5.25M-97, *Specification for Carbon and Low-Alloy Steel Electrodes and Fluxes for Electroslag Welding*, but is included for information only.)

A1. Introduction

The purpose of this annex is to correlate the electrode and flux classifications with their intended applications so the specification can be used effectively. Reference to appropriate base-metal specifications is made whenever that can be done and when it would be helpful. Such references are intended only as examples rather than complete listings of the materials for which each filler metal is suitable.

A2. Classification System

A2.1 Classification of Electrodes. The system for identifying the electrode classifications in this specification follows the standard pattern used in other AWS filler metal specifications. The letter "E" at the beginning of each classification designation stands for electrode. The remainder of the designation indicates the chemical composition of the electrode, or, in the case of composite metal cored electrodes, of the weld metal obtained with a particular flux. See Fig. A1.

The letter "M" indicates that the solid electrode is of a medium manganese content, while the letter "H" would indicate a comparatively high manganese content. The one or two digits following the manganese designator indicate the nominal carbon content of the electrode. The letter "K," which appears in some designations, indicates that the electrode is made from a heat of silicon-killed steel. The designation for a solid wire is followed by the suffix "EW." Solid electrodes are classified only on the basis of their chemical composition, as specified in Table 1 of this specification. A composite electrode is indicated by the letters "WT" after the "E," and a numerical suffix. The composition of a composite electrode is meaningless, and the user is therefore referred to weld-metal composition (Table 2) with a particular flux, rather than to electrode composition.

A comparison of solid electrode classifications in this specification and those of other specifications is shown in Table A1.

A2.2 Classification of Fluxes. Fluxes are classified on the basis of the mechanical properties of the weld metal made with some particular classification of electrode, under the specific test conditions called for in this specification.

For example, consider the following flux classifications:

FES60-EH14-EW FES72-EWT2

The prefix "FES" designates a flux for electroslag welding. In the case of the designations for A5.25, this is followed by a single digit representing the minimum tensile strength required of the weld metal in units of 10 000 psi (see Table 3); for the designations for A5.25M, the FES is followed by two digits (43, 48, or 55), representing the minimum tensile strength in units of 10 MPa (see Table 3M).

The digit that follows is a number or the letter "Z." This digit refers to the impact strength of the weld metal. Specifically, it designates the temperature at (and above) which the weld metal meets, or exceeds, the required 15 ft·lbf [20 J] Charpy V-notch impact strength (except for the letter "Z," which indicates that no impact strength requirement is specified in Table 4). These mechanical property designators are followed by the designation of the electrode used in classifying the flux (see Tables 1 and 2). The suffix (EM12-EW,

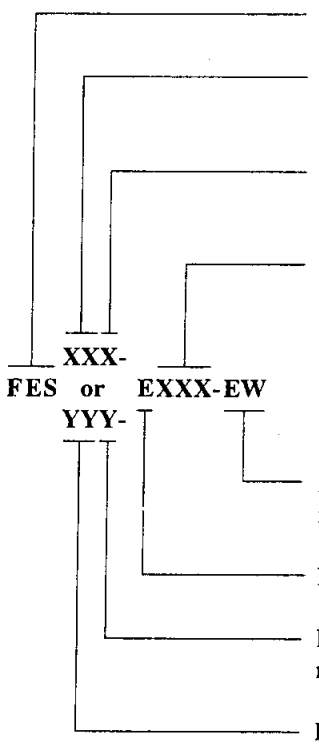

Designates a flux for electroslag welding.

Indicates, in 10 000 psi increments, the minimum tensile strength of the weld metal produced by the flux when used with a specific electrode when tested according to the A5.25 specification.

Indicates the lowest temperature at which the impact strength of weld metal referred to above meets or exceeds the level of 15 ft·lbf when tested according to the A5.25 specification.

Indicates the chemical composition of the weld metal produced by a composite metal cored electrode when used with a specific flux, or the chemical composition of a solid electrode.

Indicates a solid electrode (EW) for electroslag welding. Omission indicates a composite metal cored electrode.

Indicates an electrode (E).

Indicates the lowest temperature at which the impact strength of weld metal referred to above meets or exceeds the level of 20 J when tested according to the A5.25M specification.

Indicates, in 10 MPa increments, the minimum tensile strength of the weld metal produced by the flux used with a specific electrode when tested according to the A5.25M specification.

FIG. A1 CLASSIFICATION SYSTEM

TABLE A1
COMPARISON OF A5.25/A5.25M-97 CLASSIFICATIONS AND CLASSIFICATIONS IN OTHER AWS SPECIFICATIONS AND PROPOSED ISO DESIGNATIONS

	Similar Classifications[a]					
AWS A5.25/A5.25M Classification	AWS A5.17	AWS A5.18	AWS A5.23	AWS A5.26	AWS A5.28	Proposed ISO Designation[b]
EM5K-EW	—	ER70S-2	—	EGXXS-2	—	S2134
EM12-EW	EM12	—	—	—	—	S2000
EM12K-EW	EM12K	—	EM12K	—	—	S2010
EM13K-EW	EM13K	ER70S-3	—	EGXXS-3	—	S2030
EM15K-EW	EM15K	—	—	—	—	S2210
EH14-EW	EH14	—	—	—	—	S4200
EWS-EW	—	—	EW	—	—	S1000-W
EA3K-EW[c]	—	—	EA3	EGXXS-D2	ER80S-D2	S3020-A3
EH10K-EW	—	—	—	—	—	—
EH11K-EW	EH11K	ER70S-6	—	EGXXS-6	—	S3031

NOTES
a. Classifications are similar, but not necessarily identical in composition:
ANSI/AWS A5.17, *Specification for Carbon Steel Electrodes and Fluxes for Submerged Arc Welding*
ANSI/AWS A5.18, *Specification for Carbon Steel Electrodes and Rods for Gas Shielded Arc Welding*
ANSI/AWS A5.23, *Specification for Low Alloy Steel Electrodes and Fluxes for Submerged Arc Welding*
ANSI/AWS A5.26, *Specification for Carbon and Low Alloy Steel Electrodes for Electrogas Welding*
ANSI/AWS A5.28, *Specification for Low Alloy Steel Electrodes and Rods for Gas Shielded Arc Welding*
b. IIW Doc. XII-1232-91 (also see Section A2.5)
c. Formerly classified as EH10Mo-EW in AWS A5.25-91.

EH10K-EW, EWT2, etc.) included after the first hyphen refers to the electrode classification with which the flux will produce weld metal that meets the specified mechanical properties when tested as called for in the specification.

It should be noted that flux of any specific trade designation may have many classifications. The number is limited only by the number of different electrode classifications with which the flux can meet the classification requirements. The flux package marking lists at least one, and may list all, classifications to which the flux conforms. Solid electrodes having the same classification are interchangeable when used with a specific flux; composite metal-cored electrodes may not be. However, the specific usability (or operating) characteristics of various fluxes of the same classification may differ in one respect or another.

A2.3 "G" Classification

A2.3.1 This specification includes filler metals classified as ES-G-EW or EWTG. The letter "G" indicates that the filler metal is of a general classification. It is "general" because not all of the particular requirements specified for each of the other classifications are specified for this classification.

The intent, in establishing this classification, is to provide a means by which filler metals that differ in one respect or another (chemical composition, for example) from all other classifications (meaning that the composition of the filler metal — in the case of the example — does not meet the composition specified for any of the classifications in the specification) can still be classified according to the specification. The purpose is to allow a useful filler metal — one that otherwise would have to await a revision of the specification — to be classified immediately, under the existing specification. This means, then, that two filler metals — each bearing the same "G" classification — may be quite different in some certain respect (chemical composition, again, for example).

A2.3.2 Request for Filler Metal Classification

(a) When a filler metal cannot be classified according to some classification other than a "G" classification, the manufacturer may request that a classification be established for that filler metal. The manufacturer may do this by following the procedure given here. When the manufacturer elects to use the "G" classification, the Committee on Filler Metals recommends that the manufacturer still request that a classification be established for that filler metal, as long as the filler metal is of commercial significance.

(b) A request to establish a new filler metal classification must be a written request, and it needs to provide sufficient detail to permit the Committee on Filler Metals or the Subcommittee to determine whether the new classification or the modification of an existing classification is more appropriate to satisfy the need. The request needs to state the variables and their limits for such a classification or modification. The request should contain some indication of the time by which completion of the new classification or modification is needed.

(c) The request should be sent to the Secretary of the Committee on Filler Metals at AWS Headquarters. Upon receipt of the request, the Secretary will do the following:

(1) Assign an identifying number to the request. This number will include the date the request was received.

(2) Confirm receipt of the request and give the identification number to the person who made the request.

(3) Send a copy of the request to the Chair of the Filler Metal Committee and the Chair of the particular Subcommittee involved.

(4) File the original request.

(5) Add the request to the log of outstanding requests.

(d) All necessary action on each request will be completed as soon as possible. If more than 12 months lapse, the Secretary shall inform the requestor of the status of the request, with copies to the Chairs of the Committee and of the Subcommittee. Requests still outstanding after 18 months shall be considered not to have been answered in a "timely manner," and the Secretary shall report these to the Chair of the Committee on Filler Metals for action.

(e) The Secretary shall include a copy of the log of all requests pending and those completed during the preceding year with the agenda for each Committee on Filler Metals meeting. Any other publication of requests that have been completed will be at the option of the American Welding Society, as deemed appropriate.

A2.4 Terms 'Not Specified' and 'Not Required.'

The point of difference (although not necessarily the amount of the difference) referred to above will be readily apparent from the use of the words "not required" and "not specified" in the specification. The use of these words is as follows:

Not Specified is used in those areas of the specification that refer to the results of some particular test. It

indicates that the requirements for that test are not specified for that particular classification.

Not Required is used in those areas of the specification that refer to the test that must be conducted in order to classify a filler metal (or a welding flux). It indicates that test is not required because the requirements (results) for the test have not been specified for that particular classification.

Restating the case, when a requirement is not specified, it is not necessary to conduct the corresponding test in order to classify a filler metal to that classification. When a purchaser wants the information provided by that test, in order to consider a particular product of that classification for a certain application, the purchaser will have to arrange for that information with the supplier of that product. The purchaser and supplier also will have to establish with that supplier just what the specific testing procedure and the acceptance requirements are to be for that test. The purchaser may want to incorporate that information (via ANSI/AWS A5.01) in the purchase order.

A2.5 An international system, for designating welding filler metals is under development by the International Institute of Welding (IIW) for use in future specifications to be issued by the International Standards Organization (ISO). Table A1 shows the proposed designations for the type of filler metal. In that system, the initial letter "S" designates a mild or low-alloy steel wire, followed by a four-digit number. If the filler metal is a metal cored wire, the initial letter is "C;" if a flux-cored wire, the initial letter is "T."

A3. Acceptance

Acceptance of all welding materials classified under this specification is in accordance with ANSI/AWS A5.01, as the specification states.

Any testing a purchaser requires of the supplier, for material shipped in accordance with this specification, shall be clearly stated in the purchase order, according to the provisions of ANSI/AWS A5.01. In the absence of any such statement in the purchase order, the supplier may ship the material with whatever testing normally is conducted on material of that classification, as specified in Schedule F, Table 1, of ANSI/AWS A5.01. Testing in accordance with any other Schedule in that Table shall be specifically required by the purchase order. In such cases, acceptance of the material shipped shall be in accordance with those requirements.

A4. Certification

The act of placing the AWS Specification and Classification designations on the packaging enclosing the product or the classification on the product itself, constitutes the supplier's (manufacturer's) certification that the product meets all of the requirements of the specification.

The only testing requirement implicit in this certification is that the manufacturer has actually conducted the test required by the specification on material that is representative of that being shipped and that material met the requirements of the specification.

Representative material, in this case, is any production run of that classification using the same formulation. "Certification" is not to be construed to mean that tests of any kind were necessarily conducted on samples of the specific material shipped. Tests on such material may or may not have been conducted. The basis for the certification required by the specification is the classification test of "representative material" cited above, and the "Manufacturer's Quality Assurance Program" in ANSI/AWS A5.01.

A5. Ventilation During Welding

A5.1 Five major factors govern the quantity of fumes in the atmosphere to which welders and welding operators are exposed during welding:

(a) Dimensions of the space in which welding is done (with special regard to the height of the ceiling)

(b) Number of welders and welding operators working in that space

(c) Rate of evolution of fumes, gases, or dust, according to the materials and processes used

(d) The proximity of the welders or welding operators to the fumes as the fumes issue from the welding zone, and to the gases and dusts in the space in which they are working

(e) The ventilation provided to the space in which the welding is done

A5.2 American National Standard ANSI/ASC Z49.1, *Safety in Welding, Cutting, and Allied Processes* (published by the American Welding Society), discusses the ventilation that is required during welding and should be referred to for details. Attention is drawn particularly to the section on Health Protection and Ventilation of that document.

A6. Welding Considerations

A6.1 Electroslag welding is a process producing coalescence of metals with molten slag which melts

the filler metal and the surfaces of the workpiece to be welded. The process is initiated by starting an arc beneath a layer of granular welding flux. The arc is then extinguished by the conductive slag which is kept molten by its resistance to electric current passing between the electrode and the workpiece. The weld pool is shielded by this slag which covers the full cross-section of the joint as welding progresses. The joint is generally welded in a single pass.

A6.2 Heat generated by the resistance to the current through the molten slag is sufficient to fuse the edges of the workpiece and melt the welding electrode. Since no arc exists, the welding action is quiet and spatter-free. The liquid metal coming from the filler metal and the fused base metal collects in a pool beneath the slag bath and slowly solidifies to form the weld.

A6.3 Because of the necessity to contain the large volume of molten slag and weld metal produced in electroslag welding, the process is used for welding in the vertical position. Water-cooled or solid copper backing shoes are usually used on each side of the joint to retain the molten metal and slag pool and to act as a mold to cool and shape the weld faces. The copper backing shoes are normally moved upward on the plate surfaces as welding progresses.

A6.4 The entire assembly — including electrode, copper shoes, wire-feeding mechanism, controls, and oscillator — generally moves vertically during operation. The length of vertical travel is unlimited and is dependent upon the design of the equipment used.

Because of the uniform heat distribution throughout the plate thickness during welding, electroslag welds are virtually free of axial or transverse distortion; however, the joint may contract. The weld interface contour is a function of the welding voltage, current, and slag pool depth. The weld metal usually consists of approximately 30 to 50 percent of base metal.

A6.5 The standard joint preparation is a square groove in a butt joint. Joint preparations other than square grooves in butt joints can be used.

A6.6 The consumable guide method uses a metal tube extending the full length of the weld joint to guide the electrode to the welding zone. The molds and all wire-feeding equipment remain stationary, with the electrode being the only moving part. The guide tube melts into the weld pool as the pool rises, supplying additional filler metal.

In some applications, the guide tubes are covered with a flux to insulate the tube if it should contact the base metal or copper backing shoes. The coating also helps to replenish flux that solidifies on the surface of the copper shoes forming the weld-face contour. The flux coating thus helps to maintain a level of molten slag adequate to provide resistance heating and to protect the weld pool from atmospheric contamination. The manufacturer should be consulted for specific recommendations regarding consumable guide tubes.

The effect of the consumable guide tube generally is to dilute the alloy content of the weld metal. Consumable guide tubes are not classified per this specification; therefore, weld-metal strength and toughness should be tested by the user.

A6.7 The specification requires the use of certain base metals for classification purposes. This does not signify any restriction on the application of the process for joining other base metals, but rather, provides a means for obtaining reproducible results. Electroslag welding is a "high dilution" process, meaning that the base metal forms a significant portion of the weld metal. The type of base metal, especially given the wide variety of available low-alloy structural steels, will influence the mechanical and other properties of the joint. Weld procedure qualification tests, as distinguished from filler metal classification tests, should be used for assessing the properties of welds for a given application.

A6.8 Electroslag welding is a high-deposition process for thick plates. Since it usually is operated as a single-pass process, the weld metal and heat-affected zone (HAZ) are subject to no subsequent weld thermal cycles, such as is common with conventional multipass arc welding of thick materials. The weld metal is characterized by large unrefined dendrites. The relatively wide HAZ is characterized by large grains. The as-welded mechanical properties of the weld and HAZ may therefore be somewhat lower than that of the base metal.

This specification requires a minimum of 15 ft·lbf [20 J] at the specified temperature while most other AWS filler metal specifications require 20 ft·lbf [27 J]. Considerable improvement in mechanical properties can be effected by a postweld heat treatment. Subcritical stress relieving heat treatments are generally less effective for electroslag welding than for arc welding. For this reason, many code requirements require an austenitizing, or normalizing, postweld heat treatment.

All of the aforementioned postweld heat treatments (i.e., subcritical stress relief, austenitizing, normalizing) may have a pronounced effect on weld metal mechanical properties, both strength levels and Charpy V-notch toughness. The strength levels of the heat-treated weld deposit can be expected to be lower than those in the as-welded condition. For this reason, the user is cau-

tioned to conduct actual tests to determine the effect of the heat treatment on the mechanical properties obtained.

A7. Discontinued Classifications

The following classifications have been discontinued over the life of this specification:

Discontinued Classification	Last Published
EH10Mo-EW	1991
EWT4	1991

A8. Safety Considerations

A8.1 Burn Protection. Molten metal, sparks, slag, and hot work surfaces are produced by welding, cutting, and allied processes. These can cause burns if precautionary measures are not used. Workers should wear protective clothing made of fire-resistant material. Pant cuffs, open pockets, or other places on clothing that can catch and retain molten metal or sparks should not be worn. High-top shoes or leather leggings and fire-resistant gloves should be worn. Pant legs should be worn over the outside of high-top shoes. Helmets or hand shields that provide protection for the face, neck, and ears, and a protective head covering should be used. In addition, appropriate eye protection should be used.

When welding overhead or in confined spaces, ear plugs to prevent weld spatter from entering the ear canal should be worn in combination with goggles, or the equivalent, to give added eye protection. Clothing should be kept free of grease and oil. Combustible materials should not be carried in pockets. If any combustible substance has been spilled on clothing, a change to clean, fire-resistant clothing should be made before working with open arcs or flames. Aprons, cape-sleeves, leggings, and shoulder covers with bibs designed for welding service should be used. Where welding or cutting of unusually thick base metal is involved, sheet metal shields should be used for extra protection.

Mechanization of highly hazardous processes or jobs should be considered. Other personnel in the work area should be protected by the use of noncombustible screens or by the use of appropriate protection as described in the previous paragraph. Before leaving a work area, hot workpieces should be marked to alert other persons of this hazard. No attempt should be made to repair or disconnect electrical equipment when it is under load; disconnection under load produces arcing of the contacts and may cause burns or shock, or both. (Note: Burns can be caused by touching hot equipment such as electrode holders, tips, and nozzles. Therefore, insulated gloves should be worn when these items are handled, unless an adequate cooling period has been allowed before touching.)

The following sources provide more detailed information on personal protection:

(a) American National Standards Institute. ANSI/ASC Z87.1, *Practice for Occupational and Educational Eye and Face Protection*. New York: American National Standards Institute.[5]

(b) ———. ANSI/ASC Z41.1, *Safety-Toe Footwear*. New York: American National Standards Institute.

(c) American Welding Society. ANSI/ASC Z49.1, *Safety in Welding, Cutting, and Allied Processes*. Miami, FL: American Welding Society.[6]

(d) OSHA. *Code of Federal Regulations*, Title 29 — Labor, Chapter XVII, Part 1910. Washington, DC: U.S. Government Printing Office.[7]

A8.2 Electrical Hazards. Electric shock can kill. However, it can be avoided. Live electrical parts should not be touched. The manufacturer's instructions and recommended safe practices should be read and understood. Faulty installation, improper grounding, and incorrect operation and maintenance of electrical equipment are all sources of danger.

All electrical equipment and the workpieces should be grounded. The workpiece lead is not a ground lead; it is used only to complete the welding circuit. A separate connection is required to ground the workpiece.

The correct cable size should be used, since sustained overloading will cause cable failure and result in possible electrical shock or fire hazard. All electrical connections should be tight, clean, and dry. Poor connections can overheat and even melt. Further, they can produce dangerous arcs and sparks. Water, grease, or dirt should not be allowed to accumulate on plugs, sockets, or electrical units. Moisture can conduct electricity. To prevent shock, the work area, equipment, and clothing should be kept dry at all times. Welders should wear dry gloves and rubber-soled shoes, or stand on a dry board or insulated platform.

Cables and connections should be kept in good condition. Improper or worn electrical connections may

[5] ANSI standards may be obtained from the American National Standards Institute, 11 West 42nd Street, New York, NY 10036.

[6] AWS standards may be obtained from the American Welding Society, 550 N.W. LeJeune Road, Miami, FL 33126.

[7] OSHA standards may be obtained from the U.S. Government Printing Office, Washington, DC 20402.

create conditions that could cause electrical shock or short circuits. Worn, damaged, or bare cables should not be used. Open-circuit voltage should be avoided. When several welders are working with arcs of different polarities, or when a number of alternating current machines are being used, the open-circuit voltages can be additive. The added voltages increase the severity of the shock hazard.

In case of electric shock, the power should be turned off. If the rescuer must resort to pulling the victim from the live contact, nonconducting materials should be used. If the victim is not breathing, cardiopulmonary resuscitation (CPR) should be administered as soon as contact with the electrical source is broken. A physician should be called and CPR continued until breathing has been restored, or until a physician has arrived. Electrical burns are treated as thermal burns; that is, clean, cold (iced) compresses should be applied. Contamination should be avoided; the injured area should be covered with a clean, dry dressing; and the patient should be transported to medical assistance, if necessary.

Recognized safety standards should be followed, such as ANSI/ASC Z49.1, *Safety in Welding, Cutting, and Allied Processes*, and NFPA No. 70, *National Electrical Code*.[8]

A8.3 Fumes and Gases. Many welding, cutting, and allied processes produce fumes and gases which may be harmful to health. Fumes are solid particles which originate from welding filler metals and fluxes, the base metal, and any coatings present on the base metal. Gases are produced during the welding process or may be produced by the effects of process radiation on the surrounding environment. Management, welders, and other personnel should be aware of the effects of these fumes and gases. The amount and composition of these fumes and gases depend upon the composition of the electrode and base metal, welding process, current level, arc length, and other factors.

The possible effects of overexposure range from irritation of eyes, skin, and respiratory system to more severe complications. Effects may occur immediately or at some later time. Fumes can cause symptoms such as nausea, headaches, dizziness, and metal fume fever. The possibility of more serious health effects exists when especially toxic materials are involved. In confined spaces, the shielding gases and fumes might displace breathing air and cause asphyxiation. One's head should always be kept out of the fumes. Sufficient ventilation, exhaust at the arc, or both, should be used to keep fumes and gases from your breathing zone and the general area.

In some cases, natural air movement will provide enough ventilation. Where ventilation may be questionable, air sampling should be used to determine if corrective measures should be applied.

More detailed information on fumes and gases produced by the various welding processes may be found in the following:

(a) The permissible exposure limits required by OSHA can be found in *Code of Federal Regulations*, Title 29 — Labor, Chapter XVII Part 1910.

(b) The recommended threshold limit values for these fumes and gases may be found in *Threshold Limit Values for Chemical Substances and Physical Agents in the Workroom Environment*, published by the American Conference of Governmental Industrial Hygienists (ACGIH).[9]

(c) The results of an AWS-funded study are available in a report entitled, *Fumes and Gases in the Welding Environment*.

A8.4 Radiation. Welding, cutting, and allied operations may produce radiant energy (radiation) harmful to health. One should become acquainted with the effects of this radiant energy.

Radiant energy may be ionizing (such as x-rays), or nonionizing (such as ultraviolet, visible light, or infrared). Radiation can produce a variety of effects such as skin burns and eye damage, depending on the radiant energy's wavelength and intensity, if excessive exposure occurs.

A8.4.1 Ionizing Radiation. Ionizing radiation is produced by the electron beam welding process. It is ordinarily controlled within acceptance limits by use of suitable shielding enclosing the welding area.

A8.4.2 Nonionizing Radiation. The intensity and wavelengths of nonionizing radiant energy produced depend on many factors, such as the process, welding parameters, electrode and base metal composition, fluxes, and any coating or plating on the base-metal. Some processes such as resistance welding and cold pressure welding ordinarily produce negligible quantities of radiant energy. However, most arc welding and cutting processes (except submerged arc welding when used properly), laser beam welding and torch welding, cutting, brazing, or soldering can produce quantities of

[8] NFPA documents are available from National Fire Protection Association, 1 Batterymarch Park, Quincy, MA 02269.

[9] ACGIH documents are available from the American Conference of Governmental Industrial Hygienists, 1330 Kemper Meadow Drive, Suite 600, Cincinnati, OH 45240-1634.

nonionizing radiation such that precautionary measures are necessary.

Protection from possible harmful effects caused by nonionizing radiant energy from welding include the following measures:

(a) One should not look at welding arcs except through welding filter plates which meet the requirements of ANSI/ASC Z87.1, *Practice for Occupational and Educational Eye and Face Protection.* It should be noted that transparent welding curtains are not intended as welding filter plates, but rather are intended to protect passersby from incidental exposure.

(b) Exposed skin should be protected with adequate gloves and clothing as specified ANSI/ASC Z49.1, *Safety in Welding, Cutting, and Allied Processes.*

(c) Reflections from welding arcs should be avoided, and all personnel should be protected from intense reflections. *(Note: Paints using pigments of substantially zinc oxide or titanium dioxide have a lower reflectance for ultraviolet radiation.)*

(d) Screens, curtains, or adequate distance from aisles, walkways, etc., should be used to avoid exposing passersby to welding operations.

(e) Safety glasses with UV-protective side shields have been shown to provide some beneficial protection from ultraviolet radiation produced by welding arcs.

A8.4.3 Ionizing radiation information sources include the following:

(a) American Welding Society F2.1-78, *Recommended Safe Practices for Electron Beam Welding and Cutting.*

(b) Manufacturer's product information literature.

A8.4.4 Nonionizing radiation information sources include the following:

(a) American National Standards Institute. ANSI/ASC Z136.1, *Safe Use of Lasers.* New York, NY: American National Standards Institute.

(b) ———. ANSI/ASC Z87.1, *Practice for Occupational and Educational Eye and Face Protection.* New York, NY: American National Standards Institute.

(c) American Welding Society. ANSI/ASC Z49.1, *Safety in Welding, Cutting, and Allied Processes.* Miami, FL: American Welding Society.

(d) Hinrichs, J. F. "Project committee on radiation — summary report." *Welding Journal* 57(1):62-s to 65-s, 1978.

(e) Marshall, W. J., Sliney, D. H., et al. "Optical radiation levels produced by air carbon arc cutting processes." *Welding Journal* 59(3):43-s to 46-s, 1980.

(f) Moss, C. E., and Murray, W. E. "Optical radiation levels produced in gas welding, torch brazing, and oxygen cutting." *Welding Journal* 58(9):37-s to 46-s, 1979.

(g) Moss, C. E. "Optical radiation transmission levels through transparent welding curtains." *Welding Journal* 58(3):69-s to 75-s, 1979.

(h) National Technical Information Service. Nonionizing radiation protection special study No. 42-0053-77, *Evaluation of the Potential Hazards from Actinic Ultraviolet Radiation Generated by Electric Welding and Cutting Arcs.* Springfield, VA: National Technical Information Service.[10]

(i) National Technical Information Service. Nonionizing radiation protection special study No. 42-0312-77, *Evaluation of the Potential Retina Hazards from Optical Radiation Generated by Electrical Welding and Cutting Arcs.* Springfield, VA: National Technical Information Service.

[10] National Technical Information documents are available from the National Technical Information Service, Springfield, VA 22161.

SPECIFICATION FOR CARBON AND LOW-ALLOY STEEL ELECTRODES FOR ELECTROGAS WELDING

SFA-5.26

(Identical with AWS Specification A5.26/A5.26M-97.)

1. Scope

This specification prescribes requirements for the classification of carbon and low-alloy steel electrodes for electrogas welding. It covers solid and composite (flux cored and metal cored) electrodes used with external gas shielding, and composite (self-shielded flux cored) electrodes used without external shielding.

PART A — GENERAL REQUIREMENTS

2. Classification

2.1 The solid electrodes covered by this specification are classified according to the chemical composition of the electrode, as specified in Table 1 and the mechanical properties of the weld metal as specified in Tables 2 and 3.

2.2 The composite (flux cored and metal cored) electrodes covered by this specification are classified according to the need for external shielding gas (Table 4) and the chemical composition and mechanical properties of the weld metal, as specified in Tables 2, 3, and 4.

2.3 Electrodes classified under one classification shall not be classified under any other classification in this specification, except as specifically permitted by Note (a) to Table 3.

2.4 The electrodes classified under this specification are intended for electrogas welding, but that is not to prohibit their use with any other process for which they are found suitable.

3. Acceptance

Acceptance[1] of the electrodes shall be in accordance with the provisions of ANSI/AWS A5.01, *Filler Metal Procurement Guidelines.*[2]

4. Certification

By affixing the AWS Specification and Classification designations to the packaging, or the classification to the product, the manufacturer certifies that the product meets the requirements of this specification.[3]

5. Units of Measure and Rounding-Off Procedure

5.1 This specification makes use of both U.S. Customary Units and the International System of Units (SI). The measurements are not exact equivalents; therefore each system must be used independently of the other without combining in any way. The specification with the designation A5.26 uses U.S. Customary units. The specification A5.26M uses SI units. The latter are shown in appropriate columns in tables or within brackets [] when used in the text.

5.2 For the purpose of determining conformance with this specification, an observed or calculated value shall be rounded to the nearest 1000 psi [10 MPa] for tensile and yield strength, and to the "nearest unit" in the last right-hand place of figures used in expressing the

[1] See Section A3 (in the Annex) for further information concerning acceptance, testing of the material shipped, and ANSI/AWS A5.01, *Filler Metal Procurement Guidelines.*

[2] AWS standards can be obtained from the American Welding Society, 550 N.W. LeJeune Road, Miami, FL 33126.

[3] See Section A4 (in the Annex) for further information concerning certification and the testing called for to meet this requirement.

TABLE 1
CHEMICAL COMPOSITION REQUIREMENTS FOR SOLID ELECTRODES

AWS Classification[c]	UNS Number[d]	Weight, Percent[a,b]											Other Elements, Total
		C	Mn	S	P	Si	Ni	Mo	Cu[e]	Ti	Zr	Al	
EGXXS-1	K01313	0.07–0.19	0.90–1.40	0.035	0.025	0.30–0.50	—	—	0.35	—	—	—	0.50
EGXXS-2	K10726	0.07	0.90–1.40	0.035	0.025	0.40–0.70	—	—	0.35	0.05–0.15	0.02–0.12	0.05–0.15	0.50
EGXXS-3	K11022	0.06–0.15	0.90–1.40	0.035	0.025	0.45–0.75	—	—	0.35	—	—	—	0.50
EGXXS-5	K11357	0.07–0.19	0.90–1.40	0.035	0.025	0.30–0.60	—	—	0.35	—	—	0.50–0.90	0.50
EGXXS-6	K11140	0.06–0.15	1.40–1.85	0.035	0.025	0.80–1.15	—	—	0.35	—	—	—	0.50
EGXXS-D2	K10945	0.07–0.12	1.60–2.10	0.035	0.025	0.50–0.80	0.15	0.40–0.60	0.35	—	—	—	0.50
EGXXS-G	—	Not Specified[f]											

NOTES:
a. The filler metal shall be analyzed for the specific elements for which values are shown in this table. If the presence of other elements is indicated, in the course of this work, the amount of those elements shall be determined to ensure that their total (excluding iron) does not exceed the limit specified for "Other Elements, Total" in the last column of the table.
b. Single values are maximums.
c. The letters "XX" as used in the AWS classification column of this table refer respectively to the designator for tensile strength of the weld metals (see Tables 2 and 2M) and the designator for impact strength (see Tables 3 and 3M).
d. SAE/ASTM Unified Numbering System for Metals and Alloys.
e. The copper limit includes copper that may be applied as a coating on the electrode.
f. Composition shall be reported; the requirements are those agreed to by the purchaser and the supplier.

TABLE 2
A5.26 TENSION TEST REQUIREMENTS (AS WELDED)

AWS A5.26 Classification[a]	Tensile Strength psi	Yield[b] Strength (Min.) psi	Elongation[b] Percent, Min.
EG6ZX-X EG60X-X EG62X-X	60 000 to 80 000	36 000	24
EG7ZX-X EG70X-X EG72X-X	70 000 to 95 000	50 000	22
EG8ZX-X EG80X-X EG82X-X	80 000 to 100 000	60 000	20

NOTES:
a. The letters "X-X" as they are used in the AWS A5.26 Classification column in this table refer respectively to "S" or "T" (whether the electrode is solid or composite), replacing the first "X" and "1, 2, 3, 5, 6, D2, Ni1, NM2, W, or G" (the designation for chemical composition and shielding gas requirements for composite electrodes only) replacing the second "X."
b. Yield strength at 0.2 percent offset and elongation in 2 in. gage length.

TABLE 3
A5.26 IMPACT TEST REQUIREMENTS[a] (AS WELDED)

AWS A5.26 Classification[a]	Average Impact Strength[b], min. (ft·lbf)
EG6ZX-X EG7ZX-X EG8ZX-X	Not specified
EG60X-X EG70X-X EG80X-X	20 @ 0 °F
EG62X-X EG72X-X EG82X-X	20 @ −20°F

NOTES:
a. An electrode combination that meets the impact requirements at a given temperature also meets the requirement at all higher temperatures in this table. In this manner, EGX2X-X may also be classified as EGX0X-X and EGXZX-X and EGX0X-X may be classified as EGXZX-X.
b. Both the highest and lowest of the five test values obtained shall be disregarded in computing the impact strength. Two of the remaining three values shall equal or exceed 20 ft·lb and one of the three remaining values may be lower than 20 ft·lb but not lower than 15 ft·lb. The average of the three shall not be less than the 20 ft·lb specified.

TABLE 2M
A5.26M TENSION TEST REQUIREMENTS (AS WELDED)

AWS A5.26 Classification[a]	Tensile Strength, MPa	Yield Strength, min.[b] MPa	Elongation, min.[b] percent
EG43ZX-X EG432X-X EG433X-X	430 to 550	250	24
EG48ZX-X EG482X-X EG483X-X	480 to 650	350	22
EG55ZX-X EG552X-X EG553X-X	550 to 700	410	20

NOTES:
a. The letters X-X as they are used in the AWS A5.26M Classification column in this table refer respectively to "S" or "T" (whether the electrode is solid or composite) replacing the first "X" and "1, 2, 3, 5, 6, D2, Ni1, NM2, W or G" (designation for chemical composition and shielding gas requirements) replacing the second "X."
b. Yield strength at 0.2 percent offset and elongation in 50 mm gage length.

TABLE 3M
A5.26M IMPACT TEST RQUIREMENTS (AS WELDED)[a]

AWS A5.26M Classification[a]	Average Impact Strength, min.[b] (J)
EG43ZX-X EG48ZX-X EG55ZX-X	Not Specified
EG432X-X EG482X-X EG552X-X	27 @ −20°C
EG433X-X EG483X-X EG553X-X	27 @ −30°C

NOTES:
a. An electrode combination that meets the impact requirements at a given temperature also meets the requirement at all higher temperatures in this table. In this manner, EGXX3X-X may also be classified as EGXX2X-X and EGXXZX-X and EGXX2X-X may be classified as EGXXZX-X.
b. Both the highest and the lowest of the five test values obtained shall be disregarded in computing the impact strength. Two of the remaining three values shall equal or exceed 27 J and one of the three remaining values may be lower than 27 J, but not lower than 20 J. The average of the three shall not be less than 27 J specified.

TABLE 4
CHEMICAL COMPOSITION REQUIREMENTS FOR WELD METAL FROM COMPOSITE FLUX CORED AND METAL CORED ELECTRODES

AWS Classification[c]		UNS	Shielding	Weight, Percent[a,b]										Other Elements,
A5.26	A5.26M	Number[d]	Gas	C	Mn	P	S	Si	Ni	Cr	Mo	Cu	V	Total
EG6XT-1	EG43XT-1	W06301	None	(e)	1.7	0.03	0.03	0.50	0.30	0.20	0.35	0.35	0.08	0.50
EG7XT-1	EG48XT-1	W07301	None	(e)	1.7	0.03	0.03	0.50	0.30	0.20	0.35	0.35	0.08	0.50
EG8XT-1	EG55XT-1	—	None	(e)	1.8	0.03	0.03	0.90	0.30	0.20	0.25–0.65	0.35	0.08	0.50
EG6XT-2	EG43XT-2	W06302	CO_2	(e)	2.0	0.03	0.03	0.90	0.30	0.20	0.35	0.35	0.08	0.50
EG7XT-2	EG48XT-2	W07302	CO_2	(e)	2.0	0.03	0.03	0.90	0.30	0.20	0.35	0.35	0.08	0.50
EGXXT-Ni1	EGXXXT-Ni1	W21033	CO_2	0.10	1.0–1.8	0.03	0.03	0.50	0.70–1.10	—	0.30	0.35	—	0.50
EGXXT-NM1	EGXXXT-NM1	W22334	Ar/CO_2 or CO_2	0.12	1.0–2.0	0.02	0.03	0.15–0.50	1.5–2.0	0.20	0.40–0.65	0.35	0.05	0.50
EGXXT-NM2	EGXXXT-NM2	W22333	CO_2	0.12	1.1–2.1	0.03	0.03	0.20–0.60	1.1–2.0	0.20	0.10–0.35	0.35	0.05	0.50
EGXXT-W	EGXXXT-W	W20131	CO_2	0.12	0.50–1.3	0.03	0.03	0.30–0.80	0.40–0.80	0.45–0.70	—	0.30–0.75	—	0.50
EGXXT-G	EGXXXT-G	—	Not Specified[f]											

NOTES:
a. The weld metal shall be analyzed for the specific elements for which values are shown in this table. If the presence of other elements is indicated, in the course of this work, the amount of those elements shall be determined to ensure that their total (excluding iron) does not exceed the limit specified for "Other Elements, Total" in the last column of this table.
b. Single values are maximums.
c. The letters "XX" or "XXX" as used in the AWS classification column in this table refer respectively to the designator(s) for tensile strength of the weld metal (see Tables 2 and 2M) and the designator for impact strength (see Tables 3 and 3M). The single letter "X" as used in the AWS classification column refers to the designator for impact strength (see Tables 3 and 3M).
d. SAE/ASTM Unified Numbering System for Metals and Alloys.
e. Composition range of carbon not specified for these classifications, but the amount shall be determined and reported.
f. Composition shall be reported; the requirements are those agreed to by the purchaser and supplier.

limiting value for other quantities in accordance with the rounding-off method given in ASTM E29, *Standard Practice for Using Significant Digits in Test Data to Determine Conformance with Specifications.*[4]

PART B — TESTS, PROCEDURES, AND REQUIREMENTS

6. Summary of Tests

6.1 The tests required for each classification are specified in Table 5. The purpose of these tests is to determine the chemical composition, the mechanical properties, and soundness of the weld. The base metal for the weld test assemblies, the welding and testing procedures to be employed, and the results required are given in Sections 8 through 12.

[4] ASTM standards can be obtained from the American Society for Testing and Materials, 100 Barr Harbor Drive, West Conshohocken, PA 19428-2959.

7. Retest

If the results of any test fail to meet the requirement, that test shall be repeated twice. The results of both retests shall meet the requirement. Specimens for retest may be taken from the original test assembly or from one or two new test assemblies. For chemical analysis, retest need be only for those specific elements that failed to meet the test requirement.

If the results of one or both retests fail to meet the requirement, the material under test shall be considered as not meeting the requirements of this specification for that classification.

In the event that, during preparation or after completion of any test, it is clearly determined that prescribed or proper procedures were not followed in preparing the weld test assembly or test specimens or in conducting the test, the test shall be considered invalid without regard to whether the test was actually completed, or whether test results met, or failed to meet, the requirement. That test shall be repeated, following prescribed procedures. In this case the requirement for doubling of the number of test specimens does not apply.

TABLE 5
REQUIRED TESTS

AWS Classification*		Chemical Analysis		Radiographic Test	Tension Test	Impact Test
A5.26	A5.26M	Electrode	Weld Metal			
			Solid Electrodes			
EG6ZS-X	EG43ZS-X	Required	Not Required	Required	Required	Not Required
EG60S-X	EG432S-X	Required	Not Required	Required	Required	Required
EG62S-X	EG433S-X	Required	Not Required	Required	Required	Required
EG7ZS-X	EG48ZS-X	Required	Not Required	Required	Required	Not Required
EG70S-X	EG482S-X	Required	Not Required	Required	Required	Required
EG72S-X	EG483S-X	Required	Not Required	Required	Required	Required
EG8ZS-X	EG55ZS-X	Required	Not Required	Required	Required	Not Required
EG80S-X	EG552S-X	Required	Not Required	Required	Required	Required
EG82S-X	EG553S-X	Required	Not Required	Required	Required	Required
			Composite Flux Cored and Metal Cored Electrodes			
EG6ZT-X	EG43ZT-X	Not Required	Required	Required	Required	Not Required
EG60T-X	EG432T-X	Not Required	Required	Required	Required	Required
EG62T-X	EG433T-X	Not Required	Required	Required	Required	Required
EG7ZT-X	EG48ZT-X	Not Required	Required	Required	Required	Not Required
EG70T-X	EG482T-X	Not Required	Required	Required	Required	Required
EG72T-X	EG483T-X	Not Required	Required	Required	Required	Required
EG8ZT-X	EG55ZT-X	Not Required	Required	Required	Required	Not Required
EG80T-X	EG552T-X	Not Required	Required	Required	Required	Required
EG82T-X	EG553T-X	Not Required	Required	Required	Required	Required

NOTES:
* The "-X" as it is used in the AWS Classification column of this table refers to "1, 2, 3, 5, 6, D2, Ni1, NM1, NM2, W, and G" (the designation for shielding gas and chemical composition requirements.)

8. Weld Test Assemblies

8.1 At least one weld test assembly is required, and two may be required (depending on the electrode — solid as opposed to composite — and the manner in which the sample for chemical analysis is taken), as specified in Table 5. They are the following:

(a) The groove weld in Fig. 1 for mechanical properties and soundness of the weld metal for both composite and solid electrodes

(b) The weld ingot in Fig. 2 for chemical analysis of the weld metal from composite electrodes

For composite electrodes, the sample for chemical analysis may be taken from the groove weld in Fig. 1 or from the reduced section of the fractured tension test specimen, thereby avoiding the need to make the weld ingot. In case of dispute, the weld ingot shall be the referee method for chemical analysis.

8.2 Preparation of each weld test assembly shall be as prescribed in 8.3 and 8.4. The base metal for each assembly shall be as required in Table 6 and shall meet the requirements of the appropriate ASTM specification shown there, or an equivalent specification. Testing of the assemblies shall be as prescribed in 9.2, 9.3, and Sections 10 through 12.

8.3 Groove Weld for Mechanical Properties and Soundness. A test assembly shall be prepared and welded as specified in Fig. 1 using base metal of the appropriate type specified in Table 6. Testing of this assembly shall be as specified in Sections 10 through 12. The assembly shall be tested in the as-welded condition.

8.4 Weld Ingot. An ingot shall be prepared as specified in Fig. 2 except when the alternative in 8.1 (taking the sample from the weld metal in the groove weld or from the tension test specimen) is selected.

9. Chemical Analysis

9.1 For *solid electrodes*, a sample of the electrode shall be prepared for chemical analysis. Solid electrodes, when analyzed for elements that are present in a coating (copper flashing, for example), shall be analyzed without removing the coating. When the electrode is analyzed for elements other than those in the coating, the coating

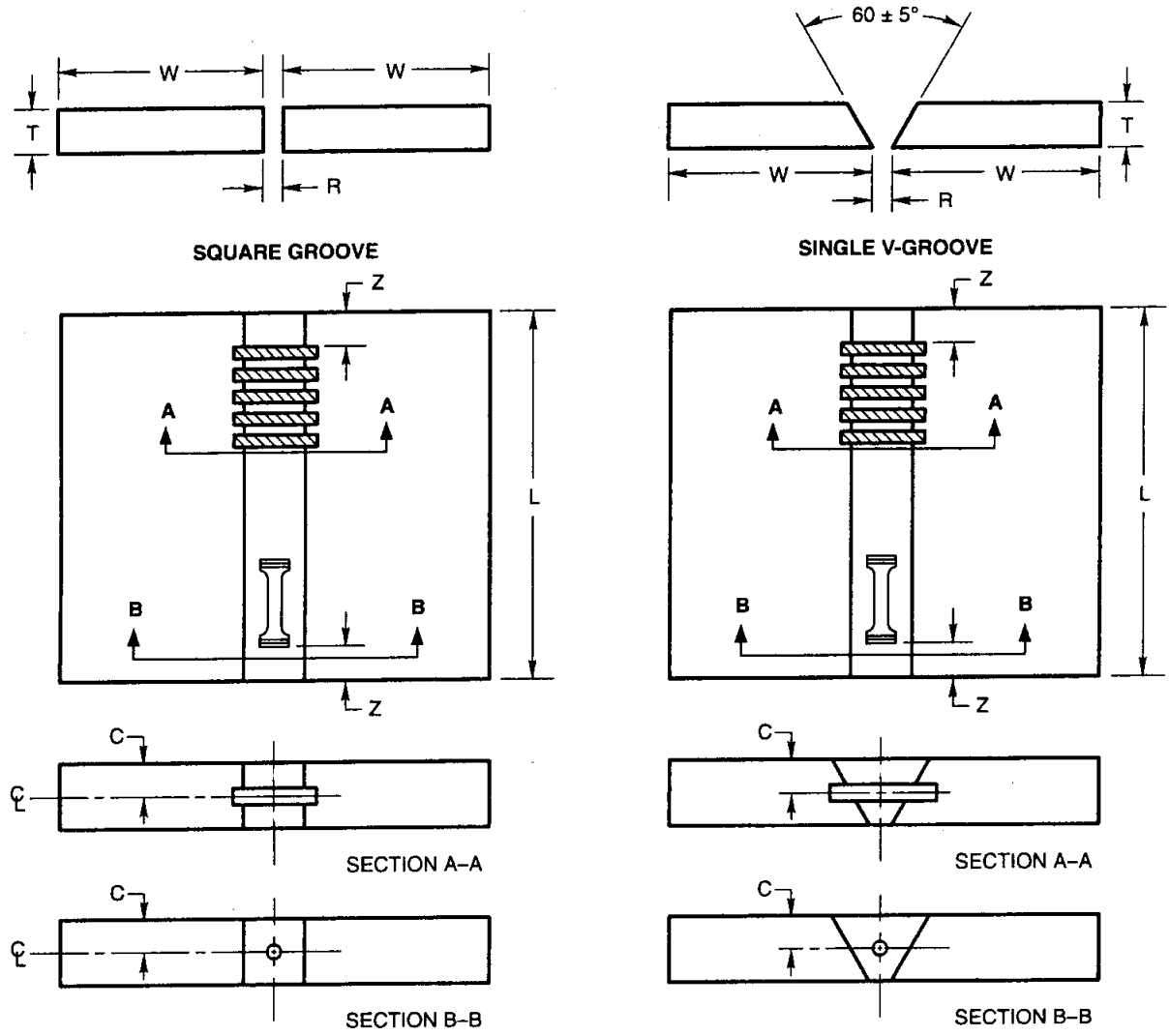

(SEE NOTES ON NEXT PAGE)

FIG. 1 GROOVE WELD TEST ASSEMBLY FOR MECHANICAL PROPERTIES AND SOUNDNESS

must be removed if its presence affects the results of the analysis for other elements.

9.2 *Composite electrodes* shall be analyzed in the form of weld metal, not electrode. The sample for analysis shall be taken from weld metal obtained with the electrode (and the shielding gas with which it is classified, for those classifications for which an external shielding gas is required). The sample shall come from an ingot (Fig. 2), the reduced section of the fractured tension test specimen (Fig. 3), or the groove weld in Fig. 1.

When the ingot is used, the top surface of the ingot (described in 8.4 and shown in Fig. 2) shall be removed and discarded and a sample for analysis shall be obtained from the underlying metal at a location at least 2 in. [50 mm] from both the start and crater ends of the ingot by any appropriate mechanical means. The sample shall be free of slag.

When the reduced section of the fractured tension test specimen or a sample from the groove weld in Fig. 1 is used, the sample shall be prepared by any suitable mechanical means. The sample from the groove

Electrode Type	Gas Shielded		Gas Shielded		Self-Shielded	
Shielding Gas	Argon–CO_2		CO_2		None	
Groove Type	Square Groove		Square Groove[h]		Square Groove	
	in.	mm	in.	mm	in.	mm
Electrode Size	5/64	2.0	3/32 or 1/8	2.4, 2.5, or 3.0	0.120	3.0
Dimensions:						
L, Length, min.	15	380	15	380	15	380
W, Width, min.	12	300	12	300	12	300
T, Thickness	1	25	1	25	1	25
Z, Discard, min.	2-1/2	65	2-1/2	65	2-1/2	65
R, Root Opening	5/8	16	5/8[h]	16[h]	3/4	19
C, Distance to the Center of Specimen	1/2	12.5	1/2	12.5	1/2	12.5
Current, dcep:						
Amperes	400 ± 50		500 ± 50		650 ± 40[d]	
Volts	36 ± 2		36 ± 2		41 ± 2	
Wire Feed Speed	—		—		350 ± 20[d]	

GENERAL NOTES:

(a) Weld test assembly shall be welded in the vertical position with upward progression.

(b) Fixturing of the test assembly shall be based on the manufacturer's recommendations. Water-cooled copper shoes shall be used except when using consumable guide tubes. For welding with consumable guide tubes, follow the manufacturer's recommendations regarding the use of water-cooled shoes. When using water cooling, the outgoing water temperature shall not exceed 180°F [80°C] near the exit point.

(c) If the manufacturer does not make the electrode size specified, the nearest size may be used. For sizes other than that shown, the manufacturer's recommended procedure shall be used.

(d) Either wire feed speed or current shall be used as a control setting based on the design of the equipment.

(e) Welding shall begin with the assembly at room temperature, 65°F [18°C] minimum. No external heat shall be applied during welding. Starting and run-off tabs are not required if the test assembly without weld tabs is sufficient to provide the required test specimens.

(f) The weld shall be completed in one pass.

(g) A postweld heat treatment shall not be applied to the test assembly.

(h) Single V-groove joint is optional for CO_2 gas shielded classifications only. In case of dispute, the square groove assembly is the referee method. Root opening, R, for single-V groove is $^5/_{32}$ in. [4 mm].

FIG. 1 GROOVE WELD TEST ASSEMBLY FOR MECHANICAL PROPERTIES AND SOUNDNESS (CONT'D)

weld shall be taken at least 2 in. [50 mm] from both the start and crater ends of the weld.

9.3 The sample shall be analyzed by accepted analytical methods. The referee method shall be ASTM Standard Method E350, *Chemical Analysis of Carbon Steel, Low-Alloy Steel, Silicon Electrical Steel, Ingot Iron and Wrought Iron.*

9.4 The results of the analysis shall meet the requirements of Table 1 for solid electrodes and Table 4 for composite electrodes, for the classification of electrode under test.

10. Radiographic Test

10.1 The groove weld described in 8.3 and shown in Fig. 1 shall be radiographed to evaluate the soundness of the weld metal. In preparation for radiography, both surfaces of the weld may be machined or ground smooth and flush with the original surfaces of the base metal or with a uniform reinforcement not exceeding $^3/_{32}$ in. [2.5 mm]. Both surfaces of the test assembly, in the area of the weld, shall be smooth enough to avoid difficulty in interpreting the radiograph.

10.2 The weld shall be radiographed in accordance with ASTM E142, *Standard Method for Controlling Quality of Radiographic Testing*. The quality level of inspection shall be 2-2T.

10.3 The soundness of the weld metal meets the requirements of this specification if the radiograph shows the following:

(a) No cracks, no incomplete fusion, and

(b) No rounded indications in excess of those permitted by the radiographic standards in Fig. 4.

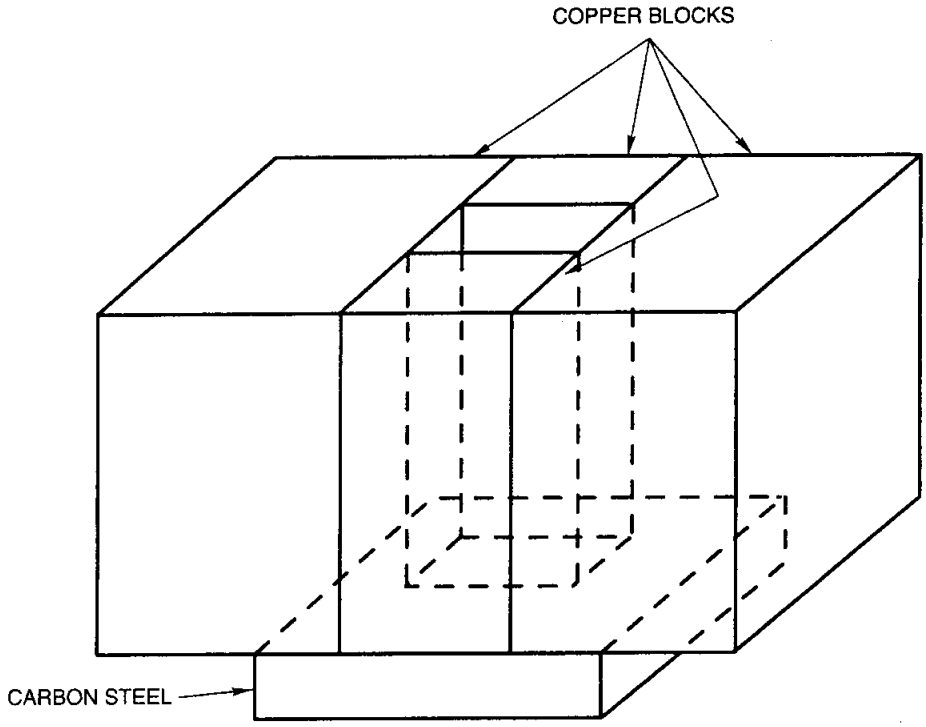

GENERAL NOTES:
1. Weld ingot shall be deposited by arc welding in a water-cooled copper mold using welding conditions shown in Figure 1.
2. The ingot shall be of any convenient shape that provides weld metal with approximately 1 in.^{2} [625 mm^2] of cross-section.
3. The ingot shall be started on a carbon steel base of sufficient size as to avoid complete fusion, and the copper mold shall be of a size sufficient to avoid contamination of the ingot by molten copper.
4. The sample for chemical analysis shall be taken at least 2 in. [50 mm] above the bottom of the ingot, and at least 2 in. [50 mm] below the crater.

FIG. 2 WELD INGOT

TABLE 6
BASE METALS FOR TEST ASSEMBLIES

AWS Classification		
A5.26	A5.26M	Base Metal
EG6XT-X EG6XS-X	EG43XT-X EG43XS-X	ASTM A36
EG7XT-X EG7XS-X	EF48XT-X EG48XS-X	ASTM A242 Type 2, or A572 Grade 50
EG8XT-X EG8XS-X	 EG55XT-X EG55XS-X	ASTM A537 Class 2, A572 Grade 60 or 65, or A633 Grade E
The following classifications are exceptions to the above general requirements:		
EGXXT-W	EGXXXT-W	ASTM A588

In evaluating the radiograph, 2-½ in. [65 mm] of the weld on each end of the test assembly shall be disregarded.

10.3.1 A rounded indication is an indication (on the radiograph) whose length is no more than three times its width. Rounded indications may be circular, elliptical, conical, or irregular in shape, and they may have tails. The size of a rounded indication is the largest dimension of the indication, including any tail that may be present.

10.3.2 The indication may be of porosity or slag. Indications whose largest dimension does not exceed 1/64 in. [0.4 mm] shall be disregarded. Test assemblies with indications greater than the largest indications permitted in the radiographic standards do not meet the requirements of this specification.

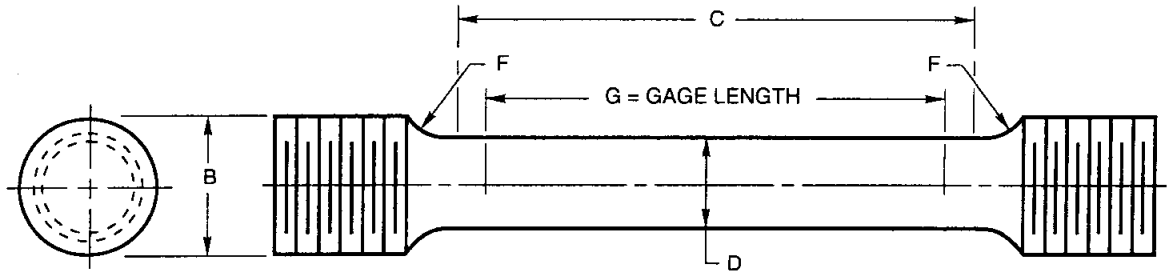

Dimensions of Specimen, in.					Approximate Area, in.^{2}
D	G	C	B	F, min.	
0.500 ± 0.010	2.000 ± 0.005	2-1/4	3/4	0.375	0.2
Dimensions of Specimen, mm					Approximate Area, mm^2
D	G	C	B	F, min.	
12.5 ± 0.2	50.0 ± 0.1	55	20	10	123

GENERAL NOTES:
1. Dimensions G and C shall be as shown, but ends may be of any shape to fit the testing machine holders as long as the load is axial.
2. The diameter of the specimen within the gage length shall be slightly smaller at the center controlling dimension than at the ends. The difference shall not exceed one percent of the diameter.
3. When the extensometer is required to determine yield strength, dimension C may be modified. However, the percent of the elongation shall be based on dimension G.
4. The surface finish within the C dimension shall be no rougher than 63 μin. [1.6 μm].

FIG. 3 TENSION TEST SPECIMEN

11. Tension Test

11.1 One all-weld-metal tension test specimen shall be machined from the groove weld described in 8.3 and shown in Fig. 1. The dimensions of the specimen shall be as shown in Fig. 3.

11.2 The specimen shall be tested in the manner described in the tension test section of ANSI/AWS B4.0, *Standard Methods for Mechanical Testing of Welds.*

11.3 The results of the tension test shall meet the requirements specified in Table 2, or Table 2M, as applicable.

12. Impact Test

12.1 Five Charpy V-notch impact test specimens (Fig. 5) shall be machined from the test assembly shown in Fig. 1, for those classifications for which impact testing is required in Table 5. The five specimens shall be tested in accordance with the fracture toughness test section of ANSI/AWS B4.0. The test temperature and the test results shall be those specified in Table 3 or Table 3M, as applicable, for the classification under test.

12.2 In evaluating the test results, the lowest and the highest values obtained shall be disregarded. Two of the remaining three values shall equal, or exceed, the specified 20 ft·lbf [27 J] energy level. One of the three may be lower, but not lower than 15 ft·lbf [20 J], and the average of the three shall be not less than the required 20 ft·lbf [27 J] energy level.

PART C — MANUFACTURE, IDENTIFICATION, AND PACKAGING

13. Method of Manufacture

The electrodes classified according to this specification may be manufactured by any method that will produce material that meets the requirements of this specification.

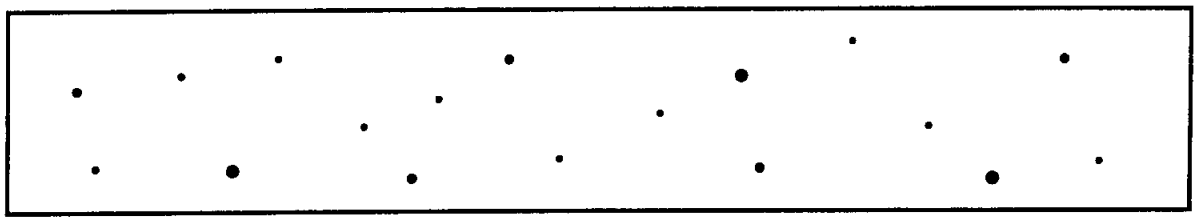

(A) ASSORTED ROUNDED INDICATIONS

SIZE 1/64 in. TO 1/16 in. [0.4 TO 1.6 mm] DIAMETER OR IN LENGTH.
MAXIMUM NUMBER OF INDICATIONS IN ANY 6 in. [150 mm] OF WELD = 18, WITH THE FOLLOWING RESTRICTIONS:
MAXIMUM NUMBER OF LARGE 3/64 TO 1/16 in. [1.2 TO 1.6 mm] DIAMETER AND/OR LENGTH INDICATIONS = 3.
MAXIMUM NUMBER OF MEDIUM 1/32 TO 3/64 in. [0.8 TO 1.2 mm] DIAMETER AND/OR LENGTH INDICATIONS = 5.
MAXIMUM NUMBER OF SMALL 1/64 TO 1/32 in. [0.4 TO 0.8 mm] DIAMETER AND/OR LENGTH INDICATIONS = 10.

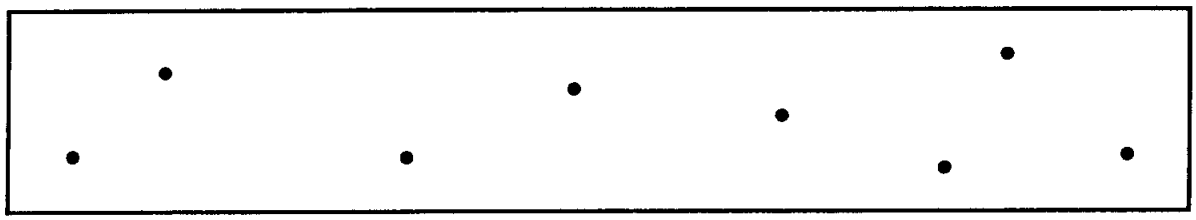

(B) LARGE ROUNDED INDICATIONS

SIZE 3/64 TO 1/16 in. [1.2 TO 1.6 mm] DIAMETER AND/OR LENGTH.
MAXIMUM NUMBER OF INDICATIONS IN ANY 6 in. [150 mm] OF WELD = 8.

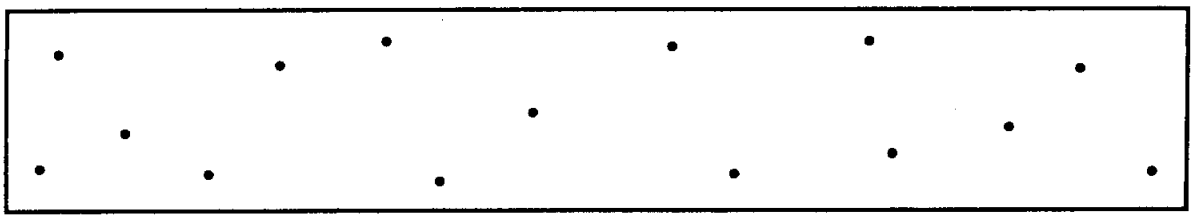

(C) MEDIUM ROUNDED INDICATIONS

SIZE 1/32 TO 3/64 in. [0.8 TO 1.2 mm] DIAMETER AND/OR LENGTH.
MAXIMUM NUMBER OF INDICATIONS IN ANY 6 in. [150 mm] OF WELD = 15.

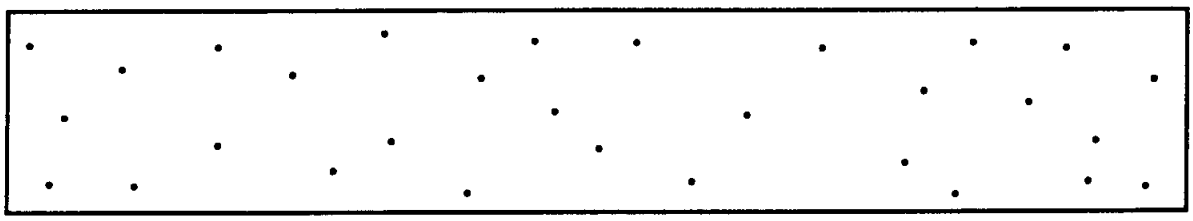

(D) SMALL ROUNDED INDICATIONS

SIZE 1/64 TO 1/32 in. [0.4 TO 0.8 mm] DIAMETER AND/OR LENGTH.
MAXIMUM NUMBER OF INDICATIONS IN ANY 6 in. [150 mm] OF WELD = 30.

GENERAL NOTES:

1. In using these standards the chart which is most representative of the size of the porosity and/or inclusions present in the test specimen radiograph shall be used for determining conformance to these radiographic standards.
2. Since these are test welds specifically made in the laboratory for classification purposes, the radiographic requirements for these test welds are more rigid than those which may be required for general fabrication.
3. Indications smaller than $^{1}/_{64}$ in. [0.4 mm] shall be disregarded.

FIG. 4 RADIOGRAPHIC ACCEPTANCE STANDARDS

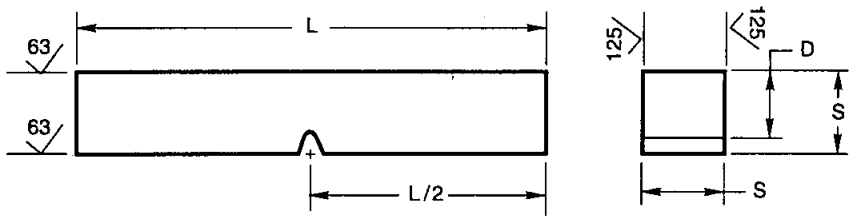

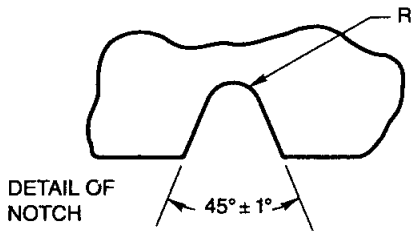

DIMENSIONS	in.	mm
L, LENGTH	2.165 +0, −0.100	55 +0, −2.5
S, SECTION	0.394 ±0.001	10 ±0.025
D, DEPTH UNDER NOTCH	0.315 ±0.001	8 ±0.025
R, NOTCH RADIUS	0.010 ±0.001	0.25 ±0.025
L/2, MID-LENGTH TOLERANCE	±0.039	±0.1

NOTES:
1. The notched surface and the surface to be struck shall be parallel within 0.002 in. [0.05 mm] and have at least 63 μin. [1.6 μm] finish. The other two surfaces shall be square with the notched or struck surface within ±10 minutes of the degree and have at least 125 μin. [3.2 μm] finish.
2. The notch shall be smoothly cut by mechanical means and shall be square with the longitudinal edge of the specimen within one degree.
3. The geometry of the notch shall be measured on at least one specimen in a set of five specimens. Measurement shall be done at minimum 50 times magnification on either a shadowgraph or a metallograph.
4. The correct location of the notch shall be verified by etching before or after machining.
5. If a specimen does not break upon being struck, the value for energy absorbed shall be reported as the capacity of the impact testing machine followed by a plus sign (+).

FIG. 5 CHARPY V-NOTCH IMPACT TEST SPECIMEN

14. Standard Sizes

Standard sizes for electrodes in the different package forms (coils with support, coils without support, spools and drums) are shown in Table 7.

15. Finish and Uniformity

15.1 All electrodes shall have a smooth finish that is free from slivers, depressions, scratches, scale, seams or laps (exclusive of the longitudinal joint in composite electrodes), and foreign matter that would adversely affect the welding characteristics, the operation of the welding equipment, or the properties of the weld metal.

15.2 Each continuous length of electrode shall be from a single lot of material, and welds, when present, shall have been made so as not to interfere with the uniform, uninterrupted feeding of the electrode on automatic equipment.

15.3 The core ingredients in composite electrodes shall be distributed with sufficient uniformity throughout the length of the electrode so as not to adversely affect the performance of the electrode or the properties of the weld metal.

15.4 A suitable protective coating may be applied to any of the electrodes in this specification.

16. Standard Package Forms

16.1 Standard package forms are coils with support, coils without support, spools, and drums. Standard package dimensions and weights for each form are given in Table 8, and Figs. 6A and 6B provide dimensions for standard spools. Package forms, sizes and weights other than these shall be as agreed between purchaser and supplier.

16.2 The liners in coils with support shall be designed and constructed to prevent distortion of the coil during normal handling and use and shall be clean and dry enough to maintain the cleanliness of the electrode.

16.3 Spools shall be designed and constructed to prevent distortion of the electrode during normal han-

TABLE 7
STANDARD SIZES*

Standard Package Forms	A5.26 Diameter in.	A5.26 Tolerance Solid ±in.	A5.26 Tolerance Cored ±in.	A5.26M Diameter mm	A5.26M Tolerance Solid ±mm	A5.26M Tolerance Cored ±mm
Coils with support	1/16	0.062	0.002	1.6	0.05	0.05
Coils without support	5/64	0.078	0.003	2.0	0.05	0.08
Drums, and Spools	3/32	0.094	0.003	2.4	0.05	0.08
				2.5	0.05	0.08
		0.120	0.003	3.0	0.08	0.08
	1/8	0.125	0.003	3.2	0.08	0.08
	5/32	0.156	0.003	4.0	0.08	0.08

*Dimensions, tolerances, and package forms other than those shown shall be as agreed between purchaser and supplier.

dling and use and shall be clean and dry enough to maintain the cleanliness of the electrode.

17. Winding Requirements

17.1 Electrodes shall be wound so that kinks, waves, sharp bends, overlapping, or wedging are not encountered, leaving the electrode free to unwind without restriction. The outside end of the electrode (the end with which welding is to begin) shall be identified so it can be located readily, and shall be fastened to avoid unwinding.

17.2 The cast and helix of electrode in coils, spools and drums shall be such that the electrode will feed in an uninterrupted manner on automatic equipment.

18. Electrode Identification

18.1 The product information and the precautionary information required in Section 20, Marking of Packages, shall also appear on each coil, spool and drum.

18.2 Coils without support shall have a tag containing this information, securely attached to the electrode at the inside end of the coil.

18.3 Coils with support shall have the information securely affixed in a prominent location on the support.

18.4 Spools shall have the information securely affixed in a prominent location on the outside of at least one flange of the spool.

18.5 Drums shall have the information securely affixed in a prominent location on the side of the drum.

19. Packaging

Electrodes shall be suitably packaged to ensure against damage during shipment and storage under normal conditions.

20. Marking of Packages

20.1 The following product information (as a minimum) shall be legibly marked so as to be visible from the outside of each unit package.

(a) AWS specification and classification (year of issue may be excluded)

(b) Supplier's name and trade designation

(c) Size and net weight

(d) Lot, control, or heat number

20.2 The following precautionary information (as a minimum) shall be prominently displayed in legible print on all packages of electrodes including individual unit packages enclosed within a larger package.

WARNING:

PROTECT yourself and others. Read and understand this information.

FUMES AND GASES can be hazardous to your health.

ARC RAYS can injure eyes and burn skin.

ELECTRIC SHOCK can KILL.

- Read and understand the manufacturer's instructions, the Material Safety Data Sheets (MSDSs), and your employer's safety practices.

TABLE 8
STANDARD PACKAGE DIMENSIONS AND WEIGHTS[a]

Type of Package	Package Size OD[d]		Net Weight of Electrode[b]	
	in.	mm	lb	kg
Coils without support	Not specified[c]		Not specified[c]	
Spools	12	300	25, 30, and 35	10 and 15
	14	360	50 and 60	20 and 25
	22	560	250	100
	24	610	300	150
	30	760	600, 750, and 1000	250, 350, and 450
Drums	15½	400	Not specified[c]	
	20	500	Not specified[c]	
	23	600	300 and 600	150 and 300

Coils with Support — Standard Dimensions and Weight[a]

Electrode Size	Coil Net Weight[b]		Coil Dimensions			
			Inside Dia. of Lining		Width of Wound Electrodes	
	lb	kg	in.	mm	in., max.	mm, max.
All	60 and 75	20, 25 and 30	12 ± ⅛	300 +3, −10	4⅝	120
	150 and 200	75 and 100	23½ ± ¼	600 +3, −10	5	125

NOTES:
a. Sizes and net weights other than those specified shall be as agreed between supplier and purchaser.
b. Tolerance on net weight shall be ± 10 percent.
c. As agreed by supplier and purchaser.
d. OD = outside diameter.

- Keep your head out of the fumes.
- Use enough ventilation, exhaust at the arc, or both, to keep fumes and gases away from your breathing zone and the general area.
- Wear correct eye, ear, and body protection.
- Do not touch live electrical parts.
- See American National Standard ANSI/ASC Z49.1, *Safety in Welding, Cutting, and Allied Processes,* published by the American Welding Society, 550 N.W. LeJeune Road, Miami, FL 33126; and OSHA Safety and Health Standards, *29 CFR 1910*, available from the U.S. Government Printing Office, Washington, DC 20402.

DO NOT REMOVE THIS INFORMATION

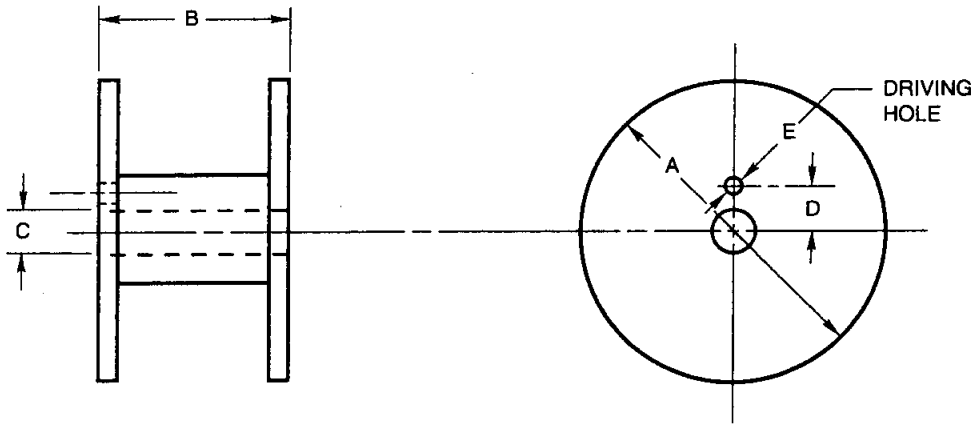

DIMENSIONS

		12 in. [300 mm] Spools		14 in. [350 mm] Spools	
		in.	mm	in.	mm
A	Diameter, max.	12	305	14	355
B	Width	4.0 ± 0.06	103 –3, +0	4.0 ± 0.6	103 –3, +0
C	Diameter	2.03 –0, +0.06	50.5 –0, +2.5	2.03 –0, +0.06	50.5 –0, +2.5
D	Distance Between Axes	1.75 ± 0.02	44.5 ± 0.5	1.75 ± 0.02	44.5 ± 0.5
E	Diameter (Note 3)	0.44 + 0, –0.06	10 –0, +1	0.44 +0, –0.06	10 –0, +1

GENERAL NOTES:
1. Outside diameter of barrel shall be such as to permit feeding of the filler metals.
2. Inside diameter of the barrel shall be such that swelling of the barrel or misalignment of the barrel and flanges will not result in the inside of the diameter of the barrel being less than the inside diameter of the flanges.
3. Holes are provided on each flange, but they need not be aligned.

FIG. 6A STANDARD DIMENSIONS OF 12 AND 14 IN. [300 AND 350 MM] SPOOLS

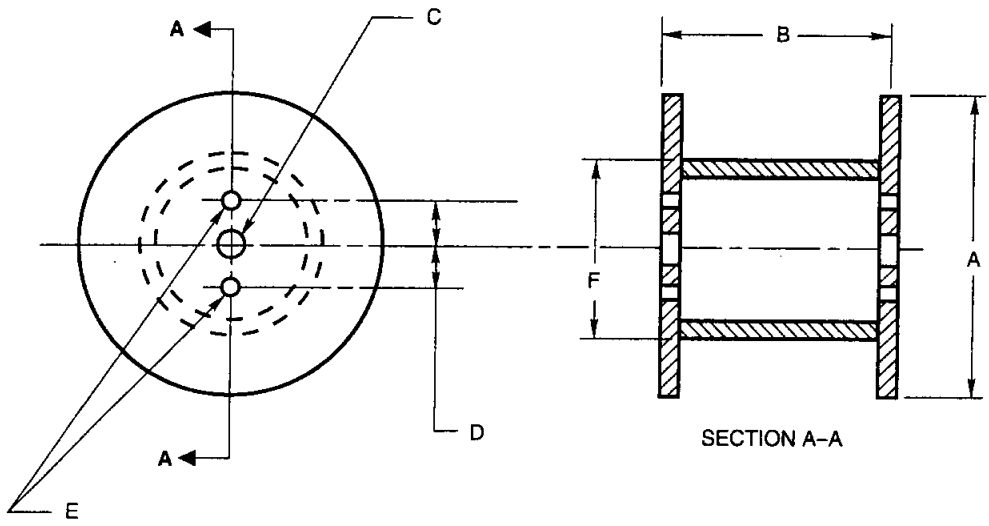

DIMENSIONS

		22 in. [560 mm] Spools		24 in. [610 mm] Spools		30 in. [760 mm] Spools	
		in.	mm	in.	mm	in.	mm
A	Diameter, max.	22	560	24	610	30	760
B	Width, max.	12	305	13.5	345	13.5	345
C	Diameter	1.31 +0.13, –0	35.0 ± 1.5	1.31 +0.13, –0	35.0 ± 1.5	1.31 +0.13, –0	35.0 ± 1.5
D	Distance, Ctr. to Ctr.	2.5 ± 0.1	63.5 ± 1.5	2.5 ± 0.1	63.5 ± 1.5	2.5 ± 0.1	63.5 ± 1.5
E	Diameter (Note 3)	0.69 +0, –0.06	16.7 ± 0.7	0.69 +0, –0.06	16.7 ± 0.7	0.69 +0, –0.06	16.7 ± 0.7

GENERAL NOTES:
1. Outside diameter of barrel, dimension F, shall be such as to permit feeding of the filler metals.
2. Inside diameter of the barrel shall be such that swelling of the barrel or misalignment of the barrel and flanges will not result in the inside of the diameter of the barrel being less than the inside diameter of the flanges.
3. Two holes are provided on each flange and shall be aligned on both flanges with the center hole.

FIG. 6B STANDARD DIMENSIONS OF 22, 24, AND 30 IN. [560, 610, AND 760 MM] SPOOLS (REELS)

Annex
Guide to AWS Specification for Carbon and Low-Alloy Steel Electrodes for Electrogas Welding

(This Annex is not a part of ANSI/AWS A5.26/A5.26M-97, *Specification for Carbon and Low-Alloy Steel Electrodes for Electrogas Welding*, but is included for information purposes only.)

A1. Introduction

The purpose of this annex is to correlate the electrode classifications with their intended applications so the specification can be used effectively. Reference to appropriate base metal specifications is made whenever that can be done and when it would be helpful. Such references are intended only as examples rather than complete listings of the base metals for which each filler metal is suitable.

A2. Classification System

A2.1 The system for identifying the electrode classifications in this specification follows the standard pattern used in other AWS filler metal specifications (see Fig. A1). The letters "EG" at the beginning of each classification designation shows that the electrode is intended for use with the electrogas welding process.

In the case of the designations for A5.26, this is followed by a single digit (6, 7, or 8) representing the minimum tensile strength of the weld metal in units of 10 000 psi. For the designations of A5.26M, the "EG" is followed by two digits (43, 48, or 55) representing the minimum tensile strength in units of 10 MPa (see Table 2M).

The digit that follows is a number or the letter "Z." The number designates the temperature at which (and/or above which) the weld metal meets or exceeds the required 20 ft·lbf [27 J] Charpy V-notch impact strength. The letter "Z" indicates that no impact strength requirement is specified.

The next letter, either S or T, indicates that the electrode is solid (S) or composite (flux cored or metal cored) (T). The designator (digits or letters) following the hyphen in the classification indicates the chemical composition (of weld metal for the composite electrodes and of the electrode itself for solid electrodes) and the type or absence of shielding gas required in the case of composite electrodes only.

A2.2 "G" Classification

A2.2.1 This specification includes filler metals classified as EGXXT-G or EGXXS-G. The last "G" indicates that the filler metal is of a general classification. It is "general" because not all of the particular requirements specified for each of the other classifications are specified for this classification. The intent in establishing this classification is to provide a means by which filler metals that differ in one respect or another (chemical composition, for example) from all other classifications (meaning that the composition of the filler metal, in the case of the example, does not meet the composition specified for any of the classifications in the specification) can still be classified according to the specification. The purpose is to allow a useful filler metal — one that otherwise would have to await a revision of the specification — to be classified immediately, under the existing specification. This means, then, that two filler metals, each bearing the same "G" classification, may be quite different in some certain respect (chemical composition, again, for example).

A2.2.2 Request for Filler Metal Classification

(a) When a filler metal cannot be classified according to some classification other than a "G" classification, the manufacturer may request that a classification be established for that filler metal. The manufacturer may do this by following the procedure given here. When the manufacturer elects to use the "G" classification, the Committee on Filler Metals recommends that the

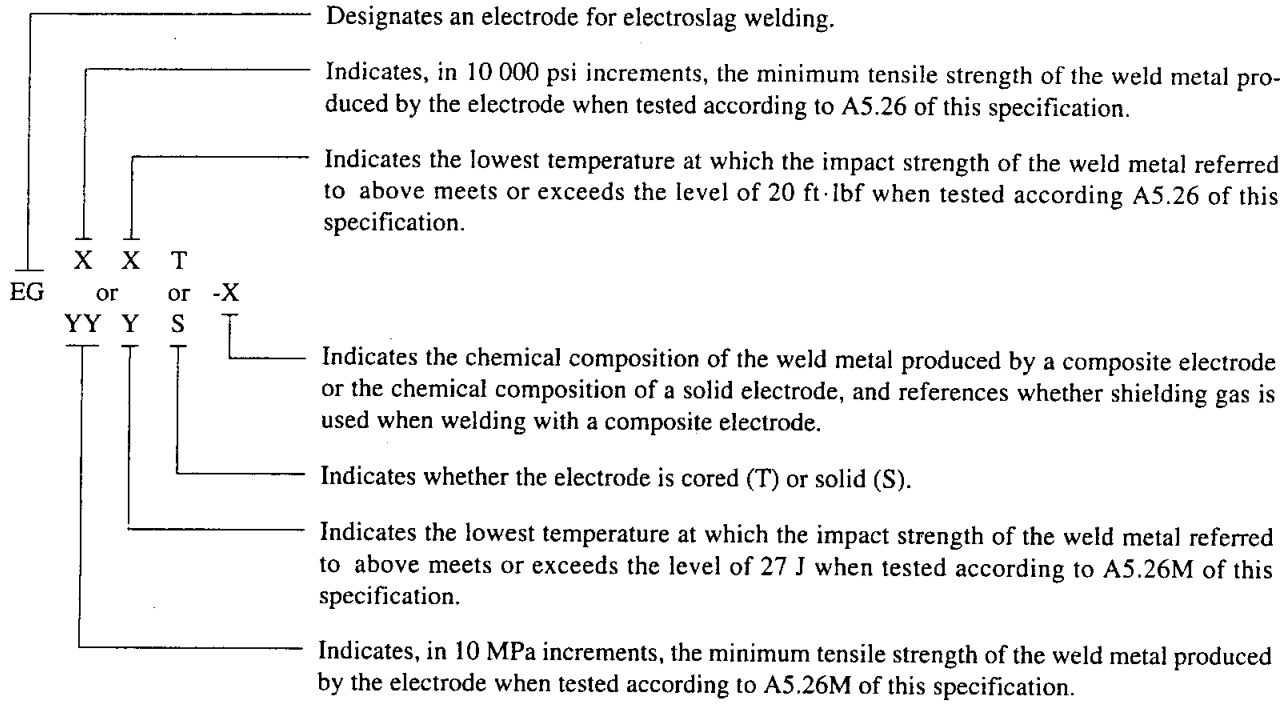

FIG. A1 CLASSIFICATION SYSTEM

manufacturer still request that a classification be established for that filler metal, as long as the filler metal is of commercial significance.

(b) A request to establish a new filler metal classification must be a written request and it needs to provide sufficient detail to permit the Committee on Filler Metals or the Subcommittee to determine whether the new classification or the modification of an existing classification is more appropriate to satisfy the need. The request needs to state the variables and their limits for such a classification or modification. The request should contain some indication of the time by which completion of the new classification or modification is needed.

(c) The request should be sent to the Secretary of the Committee on Filler Metals at AWS headquarters. Upon receipt of the request, the Secretary will:

(1) Assign an identifying number to the request. This number will include the date the request was received.

(2) Confirm receipt of the request and give the identification number to the person who made the request.

(3) Send a copy of the request to the Chairman of the Committee on Filler Metals and the Chairman of the particular Subcommittee involved.

(4) File the original request.

(5) Add the request to the log of outstanding requests.

(d) All necessary action on each request will be completed as soon as possible. If more than 12 months lapse, the Secretary shall inform the requestor of the status of the request, with copies to the Chairmen of the Committee and of the Subcommittee. Requests still outstanding after 18 months shall be considered not to have been answered in a "timely manner" and the Secretary shall report these to the Chairman of the Committee on Filler Metals for action.

(e) The Secretary shall include a copy of the log of all requests pending and those completed during the preceding year with the agenda for each Committee on Filler Metals meeting. Any other publication of requests that have been completed will be at the option of the American Welding Society, as deemed appropriate.

A2.3 Terms 'Not Specified' and 'Not Required.' The point of difference (although not necessarily the amount of the difference) referred to above will be readily apparent from the use of the words "not required" and "not specified" in the specification. The use of these words is as follows:

Not Specified is used in those areas of the specification that refer to the results of some particular test. It indicates that the requirements for that test are not specified for that particular classification.

Not Required is used in those areas of the specification that refer to the test that must be conducted in order to classify a filler metal. It indicates that the test is not required because the requirements (results) for the test have not been specified for that particular classification.

Restating the case, when a requirement is not specified, it is not necessary to conduct the corresponding test to classify a filler metal to that classification. When a purchaser wants the information provided by that test, in order to consider a particular product of that classification for a certain application, the purchaser will have to arrange for that information with the supplier of the product. The purchaser will have to establish with that supplier just what the testing procedure and the acceptance requirements are to be for that test. The purchaser may want to incorporate that information (via ANSI/AWS A5.01, *Filler Metal Procurement Guidelines*) in the purchase order.

A2.4 An international system for designating welding filler metals is under development by the International Institute of Welding (IIW) for use in future specifications to be issued by the International Standards Organization (ISO). Table A1 shows the proposed designations for the type of filler metal. In that system the initial letter "S" designates a mild or low-alloy steel wire, followed by a four-digit number. If the filler metal is a metal cored wire, the initial letter is "C"; if a flux cored wire, the initial letter is "T."

A3. Acceptance

Acceptance of all welding materials classified under this specification is in accordance with ANSI/AWS A5.01, *Filler Metal Procurement Guidelines*, as the specification states. Any testing a purchaser requires of the supplier, for material shipped in accordance with this specification, shall be clearly stated in the purchase order, according to the provisions of ANSI/AWS A5.01, *Filler Metal Procurement Guidelines*. In the absence of any such statement in the purchase order, the supplier may ship the material with whatever testing is normally conducted on material of that classification, as specified in Schedule F, Table 1, of ANSI/AWS A5.01, *Filler Metal Procurement Guidelines*. Testing in accordance with any other Schedule in that Table must be specifically required by the purchase order. In such cases, acceptance of the material shipped shall be in accordance with those requirements.

A4. Certification

The act of placing the AWS Specification and Classification designations on the packaging enclosing the product or the classification on the product itself, constitutes the supplier's (manufacturer's) certification that the product meets all of the requirements of the specification.

The only testing requirement implicit in this certification is that the manufacturer actually has conducted the tests required by the specification on material that is representative of that being shipped and that the material met the requirements of the specification.

Representative material, in this case, is any production run of that classification using the same formulation. "Certification" is not to be construed to mean that tests of any kind were necessarily conducted on samples of the specific material shipped. Tests on such material may or may not have been conducted. The basis for the certification required by the specification is the classification test of "representative material" cited above and the "Manufacturer's Quality Assurance Program," in ANSI/AWS A5.01.

A5. Ventilation During Welding

A5.1 Five major factors govern the quantity of fumes in the atmosphere to which welders and welding operators are exposed during welding:

(a) Dimensions of the space in which welding is done (with special regard to the height of the ceiling)

(b) Number of welders and welding operators working in that space

(c) Rate of evolution of fumes, gases, or dust, according to the materials and processes used

(d) The proximity of the welders or welding operators to the fumes as the fumes issue from the welding zone, and to the gases and dusts in the space in which they are working

(e) The ventilation provided to the space in which the welding is done

A5.2 American National Standard ANSI/ASC Z49.1, *Safety in Welding, Cutting, and Allied Processes* (published by the American Welding Society), discusses

TABLE A1
COMPARISONS OF A5.26/A5.26M CLASSIFICATIONS AND CLASSIFICATIONS IN OTHER AWS SPECIFICATIONS AND PROPOSED ISO DESIGNATIONS

AWS A5.26/A5.26M Classification	Similar Classifications[a]					
	AWS A5.17	AWS A5.18	AWS A5.23	AWS A5.25	AWS A5.28	Proposed ISO Designations[b]
EGXXS-1	—	—	—	—	—	—
EGXXS-2	—	ER70S-2	—	EM5K-EW	—	S2134
EGXXS-3	EM13K	ER70S-3	—	EM13K-EW	—	S2030
EGXXS-5	—	ER70S-5	—	—	—	S2022
EGXXS-6	EH11K	ER70S-6	—	EH11K-EW	—	S3031
EGXXS-D2	—	—	EA3K	EH10Mo-EW	ER80S-D2	S3020-A3

NOTES:
a. Classifications are similar but not necessarily identical in composition.
ANSI/AWS A5.17 *Specification for Carbon Steel Electrodes and Fluxes for Submerged Arc Welding*
ANSI/AWS A5.18 *Specification for Carbon Steel Electrodes and Rods for Gas Shielded Arc Welding*
ANSI/AWS A5.23 *Specification for Low-Alloy Steel Electrodes and Fluxes for Submerged Arc Welding*
ANSI/AWS A5.25 *Specification for Carbon and Low-Alloy Steel Electrodes and Fluxes for Electroslag Welding*
ANSI/AWS A5.28 *Specification for Low-Alloy Steel Electrodes and Rods for Gas Shielding Arc Welding*
b. IIW Doc. XII-1232-91 (also see Section A2.5).

the ventilation that is required during welding and should be referred to for details. Attention is drawn particularly to the section on protection of personnel and the general area and ventilation in that document.

A6. Welding Considerations

A6.1 Electrogas welding is an arc welding process that uses solid electrodes with gas shielding, composite cored electrodes with gas shielding, or composite cored electrodes without gas shielding (self-shielded). Operating on direct current, the electrode deposits filler metal in the cavity formed by the water-cooled backing shoe(s) that bridges the groove between the joint members. The joint normally is made in a single pass, though with special fixturing multipass joints have been welded.

A6.2 Flux cored electrodes used with the electrogas welding process are designed specifically for compatibility with the process. The flux produces a thin layer of slag between the weld metal and copper backing shoes without accumulating excessive slag above the weld pool. The nonmetallic content of the flux core is lower than that of conventional gas shielded and self-shielded flux cored electrodes.

A6.3 Because of the large volume of molten weld metal produced in electrogas welding and the necessity to contain it, the process is used for welding in the essentially vertical position. Joints are readily welded in plate assemblies that are as much as 15 degrees from the vertical, or where the joint in vertical plate assemblies may be as much as 15 degrees from vertical, or both.

A6.4 The entire assembly, including electrode, copper shoes, wire-feeding mechanism, controls, and oscillator, generally moves vertically during operation. When consumable guide tubes are used, vertical movement of the equipment may not be required. The length of vertical travel is unlimited and is dependent upon the design of the equipment used.

A6.5 The standard joint geometry is a simple square groove in a butt joint. Joint geometries other than square grooves in butt joints can be used.

A6.6 Certain classifications can be used with consumable guide tubes. These guide tubes are generally AISI Grades 1008 to 1020 carbon steel tubing. In some applications, the guide tubes are covered with a flux which provides a protective slag and insulates the tube should it contact the side wall or copper backing shoes. Other applications use ceramic fusible insulators in the shape of washers affixed to the tubes. The manufacturer should be consulted for specific recommendations regarding consumable guide tubes.

The effect of the consumable guide tubes is generally to dilute the alloy content of the weld metal. Consumable guide tubes are not classified per this specification; therefore, weld metal strength and toughness should be tested by the user.

A6.7 The specification requires the use of certain base metals for classification purposes. This does not signify any restriction on the application of the process for joining other base metals, but rather to provide a means for obtaining reproducible results. Electrogas welding is a "high-dilution" process, meaning that the base metal forms a significant portion of the weld metal. The type of base metal, especially given the wide variety of available low-alloy structural steels, will influence the mechanical and other properties of the joint and weld procedure qualification tests, as distinguished from filler metal classification tests, should be used for assessing the properties of welds for a given application.

A6.8 Electrogas welding is generally a high-deposition process, especially when applied to thick plates. Since it usually is operated as a single-pass process, the weld metal and heat-affected zone are subject to no subsequent weld thermal cycles, such as is common with conventional multipass arc welding of thick materials. The relatively wide heat-affected zone (HAZ) on thick plates is often characterized by large grains. On these types of applications, the as-welded mechanical properties of the weld and HAZ may, therefore, be somewhat lower than the base metal, and should be adequately tested and evaluated for the intended application.

A7. Description and Intended Use of Electrodes

This specification contains classifications that describe three categories of electrodes: solid electrodes for use with gas shielding, composite (flux cored or metal cored) electrodes for use with gas shielding, and self-shielded composite (flux cored) electrodes which require no external gas shielding.

A7.1 Solid Electrodes. The classifications for solid electrodes contained in this specification are very similar in electrode chemical composition to, or, in many cases, identical in electrode chemical composition to classifications contained in ANSI/AWS A5.18-93, *Specification for Carbon Steel Electrodes and Rods for Gas Shielded Arc Welding*, and ANSI/AWS A5.28-96, *Specification for Low-Alloy Steel Electrodes and Rods for Gas Shielded Arc Welding*. The user should be aware that the mechanical properties obtained when using these electrodes with the electrogas welding process will differ from those obtained when using them with the gas metal or gas tungsten arc welding processes.

Weld metal mechanical properties obtained with the use of solid electrodes with the electrogas welding process are very dependent on the type of gas employed. The change from one gas type or blend to another (either more reactive or less reactive) will affect the chemical composition of the weld metal and the resulting mechanical properties. In some cases, this change in mechanical properties may be significant enough to necessitate a change in the electrode classification. For this reason, care should be taken to test the electrode with the gas or gas blend which will be used in production.

A7.2 Cored Electrodes. The classifications for composite (flux cored and metal cored) electrodes contained in this specification are based on weld metal chemical composition and the type of, or absence of, an external shielding gas, as shown in Table 4. Once again, it is important for the user to remember that the change from one gas type or blend to another (either more reactive or less reactive) will affect the chemical composition of the weld metal and the resulting mechanical properties.

It should be noted that the EGXXT-1 and EGXXT-2 classifications in this specification are totally different from the EXXT-1 and EXXT-2 classifications contained in ANSI/AWS A5.20, *Specification for Carbon Steel Electrodes for Flux Cored Arc Welding*, and ANSI/AWS A5.29, *Specification for Low Alloy Steel Electrodes for Flux Cored Arc Welding*.

A7.2.1 EGXXT-1 Classification. Electrodes of the EGXXT-1 (and EGXXXT-1) classifications are self-shielded electrodes which require no external shielding gas. Electrodes of these classifications are designed for the core materials to provide a slag cover, along with the appropriate alloys, deoxidizers, denitrifiers, and shielding materials. These often consist of fluorides, metallic alloys, and alkali and alkali earth oxides and carbonates. EGXXT-1 electrodes are designed for welding many structural steels such as ASTM A 36, A 572 and A 515, as well as many grades used in ship construction. Typical applications include bases for heavy equipment, storage tanks, ship hulls, structural members and pressure vessels.

A7.2.2 EGXXT-2 Classification. Electrodes of the EGXXT-2 (and EGXXXT-2) classifications are gas shielded electrodes designed for use with carbon dioxide shielding gas. Typical applications would be similar to those of EGXXT-1 electrodes, except the use of an external shielding gas would normally confine their use to a shop environment.

A7.2.3 EGXXT-Ni1 Classification. Electrodes of the EGXXT-Ni1 (and EGXXXT-Ni1) classifications are gas shielded electrodes designed for use with carbon dioxide shielding gas. These electrodes are similar to

EGXXT-2 electrodes except they produce weld metal with approximately 1% nickel.

A7.2.4 EGXXT-NM1 and -NM2 Classifications. Electrodes of the EGXXT-NM1 (EGXXXT-NM1) and EGXXT-NM2 (EGXXXT-NM2) classifications are gas shielded electrodes designed for use with carbon dioxide shielding gas (or an argon/carbon dioxide blend in the case of EGXXT-NM2). These electrodes produce weld metal alloyed with various levels of nickel and molybdenum.

A7.2.5 EGXXT-W Classification. Electrodes of the EGXXT-W (and EGXXXT-W) classifications are gas shielded electrodes designed for use with carbon dioxide shielding gas. These electrodes produce weld metal which is intended for use on bare exposed applications of weathering steels, such as ASTM A 242 and A 588.

A7.2.6 EGXXT-G Classification. Electrodes of the EGXXT-G (and EGXXXT-G) classification are those electrodes not included in the preceding classifications, and for which only mechanical property requirements are specified. The electrode supplier should be consulted for the composition, properties, characteristics, and intended use of electrodes of this classification. (See A2.2 for further information.)

A8. Discontinued Classifications

The classifications shown in Table A2 have been discontinued over the life of this specification:

A9. Safety Considerations

A9.1 Burn Protection. Molten metal, sparks, slag, and hot work surfaces are produced by welding, cutting and allied processes. These can cause burns if precautionary measures are not used. Workers should wear protective clothing made of fire-resistant material. Pant cuffs, open pockets, or other places on clothing that can catch and retain molten metal or sparks should not be worn. High-top shoes or leather leggings and fire-resistant gloves should be worn. Pant legs should be worn over the outside of high-top shoes. Helmets or hand shields that provide protection for the face, neck, and ears, and a protective head covering should be used. In addition, appropriate eye protection should be used.

When welding overhead or in confined spaces, ear plugs to prevent weld spatter from entering the ear canal should be worn in combination with goggles, or the equivalent, to give added eye protection. Clothing should be kept free of grease and oil. Combustible materials should not be carried in pockets. If any combustible substance has been spilled on clothing, a change to clean, fire-resistant clothing should be made before working with open arcs or flames. Aprons, cape-sleeves, leggings, and shoulder covers with bibs designed for welding service should be used. Where welding or cutting of unusually thick base metal is involved, sheet metal shields should be used for extra protection. Mechanization of highly hazardous processes or jobs should be considered. Other personnel in the work area should be protected by the use of noncombustible screens or by the use of appropriate protection as described in the previous paragraph. Before leaving a work area, hot workpieces should be marked to alert other persons of this hazard. No attempt should be made to repair or disconnect electrical equipment when it is under load; disconnection under load produces arcing of the contacts and may cause burns or shock, or both. *(Note: Burns can be caused by touching hot equipment such as electrode holders, tips, and nozzles. Therefore, insulated gloves should be worn when these items are handled, unless an adequate cooling period has been allowed before touching.)*

The following sources are for more detailed information on personal protection:

(a) American National Standards Institute. ANSI/ASC Z87.1, *Practice for Occupational and Educational Eye and Face Protection*. New York: American National Standards Institute.[5]

(b) American National Standards Institute. ANSI/ASC Z41.1, *Safety-Toe Footwear*. New York, NY: American National Standards Institute.

(c) American Welding Society. ANSI/ASC Z49.1, *Safety in Welding, Cutting, and Allied Processes*. Miami, FL: American Welding Society.[6]

TABLE A2
DISCONTINUED CLASSIFICATIONS

Discontinued Classification	Last Published	Replaced by
EGXXS-1B	1978	EGXXS-D2 in A5.26-91
EGXXS-GB	1978	EGXXS-G in A5.26-91
EGXXT3	1978	EGXXS-Ni1 in A5.26-91
EGXXT4	1978	EGXXT-NM1 in A5.26-91
EGXXT5	1978	EGXXT-W in A5.26-91

[5] ANSI standards may be obtained from the American National Standards Institute, 11 West 42nd Street, New York, NY 10036.

[6] AWS standards may be obtained from the American Welding Society, 550 N.W. LeJeune Road, Miami, FL 33126.

(d) OSHA. *Code of Federal Regulations*, Title 29 — Labor, Chapter XVII, Part 1910. Washington, DC: U.S. Government Printing Office.[7]

A9.2 Electrical Hazards. Electric shock can kill. However, it can be avoided. Live electrical parts should not be touched. The manufacturer's instructions and recommended safe practices should be read and understood. Faulty installation, improper grounding, and incorrect operation and maintenance of electrical equipment are all sources of danger.

All electrical equipment and the workpieces should be grounded. The workpiece lead is not a ground lead; it is used only to complete the welding circuit. A separate connection is required to ground the workpiece.

The correct cable size should be used, since sustained overloading will cause cable failure and result in possible electrical shock or fire hazard. All electrical connections should be tight, clean, and dry. Poor connections can overheat and even melt. Further, they can produce dangerous arcs and sparks. Water, grease, or dirt should not be allowed to accumulate on plugs, sockets, or electrical units. Moisture can conduct electricity. To prevent shock, the work area, equipment, and clothing should be kept dry at all times. Welders should wear dry gloves and rubber soled shoes, or stand on a dry board or insulated platform. Cables and connections should be kept in good condition. Improper or worn electrical connections may create conditions that could cause electrical shock or short circuits. Worn, damaged, or bare cables should not be used. Open circuit voltage should be avoided. When several welders are working with arcs of different polarities, or when a number of alternating current machines are being used, the open circuit voltages can be additive. The added voltages increase the severity of the shock hazard.

In case of electric shock, the power should be turned off. If the rescuer must resort to pulling the victim from the live contact, nonconducting materials should be used. If the victim is not breathing, cardiopulmonary resuscitation (CPR) should be administered as soon as contact with the electrical source is broken. A physician should be called and CPR continued until breathing has been restored, or until a physician has arrived. Electrical burns are treated as thermal burns; that is, clean, cold (iced) compresses should be applied. Contamination should be avoided; the area should be covered with a clean, dry dressing; and the patient should be transported to medical assistance.

[7] OSHA standards may be obtained from the U.S. Government Printing Office, Washington, DC 20402.

Recognized safety standards such as ANSI/ASC Z49.1, *Safety in Welding, Cutting, and Allied Processes*; and NFPA No. 70, *National Electrical Code*,[8] should be followed.

A9.3 Fumes and Gases. Many welding, cutting, and allied processes produce fumes and gases which may be harmful to health. Fumes are solid particles which originate from welding filler metals and fluxes, the base metal, and any coatings present on the base metal. Gases are produced during the welding process or may be produced by the effects of process radiation on the surrounding environment. Management, welders, and other personnel should be aware of the effects of these fumes and gases. The amount and composition of these fumes and gases depend upon the composition of the electrode and base metal, welding process, current level, arc length, and other factors.

The possible effects of overexposure range from irritation of eyes, skin, and respiratory system to more severe complications. Effects may occur immediately or at some later time.

Fumes can cause symptoms such as nausea, headaches, dizziness, and metal fume fever. The possibility of more serious health effects exists when especially toxic materials are involved. In confined spaces, the shielding gases and fumes might displace breathing air and cause asphyxiation. One's head should always be kept out of the fumes. Sufficient ventilation, exhaust at the arc, or both, should be used to keep fumes and gases from your breathing zone and the general area.

In some cases, natural air movement will provide enough ventilation. Where ventilation may be questionable, air sampling should be used to determine if corrective measures should be applied.

More detailed information on fumes and gases produced by the various welding processes may be found in the following:

(a) The permissible exposure limits required by OSHA can be found in *Code of Federal Regulations*, Title 29 — Labor, Chapter XVII Part 1910.

(b) The recommended threshold limit values for these fumes and gases may be found in *Threshold Limit Values for Chemical Substances and Physical Agents in the Workroom Environment*, published by the American Conference of Governmental Industrial Hygienists (ACGIH).[9]

[8] NFPA documents are available from the National Fire Protection Association, 1 Batterymarch Park, Quincy, MA 02269.

[9] ACGIH documents are available from the American Conference of Governmental Industrial Hygienists. 1330 Kemper Meadow Dr., Cincinnati, OH 45240-1634.

(c) The results of an AWS-funded study are available in a report entitled, *Fumes and Gases in the Welding Environment.*

A9.4 Radiation. Welding, cutting, and allied operations may produce radiant energy (radiation) harmful to health. One should become acquainted with the effects of this radiant energy.

Radiant energy may be ionizing (such as x-rays), or nonionizing (such as ultraviolet, visible light, or infrared). Radiation can produce a variety of effects such as skin burns and eye damage, depending on the radiant energy's wavelength and intensity, if excessive exposure occurs.

A9.4.1 Ionizing Radiation. Ionizing radiation is produced by the electron beam welding process. It is ordinarily controlled within acceptance limits by use of suitable shielding enclosing the welding area.

A9.4.2 Nonionizing Radiation. The intensity and wavelengths of nonionizing radiant energy produced depend on many factors, such as the process, welding parameters, electrode and base metal composition, fluxes, and any coating or plating on the base metal. Some processes such as resistance welding and cold pressure welding ordinarily produce negligible quantities of radiant energy. However, most arc welding and cutting processes (except submerged arc when used properly), laser beam welding and torch welding, cutting, brazing, or soldering can produce quantities of nonionizing radiation such that precautionary measures are necessary.

Protection from possible harmful effects caused by nonionizing radiant energy from welding include the following measures:

(a) One should not look at welding arcs except through welding filter plates which meet the requirements of ANSI/ASC Z87.1, *Practice for Occupational and Educational Eye and Face Protection.* It should be noted that transparent welding curtains are not intended as welding filter plates, but rather are intended to protect passersby from incidental exposure.

(b) Exposed skin should be protected with adequate gloves and clothing as specified ANSI/ASC Z49.1, *Safety in Welding, Cutting, and Allied Processes.*

(c) Reflections from welding arcs should be avoided, and all personnel should be protected from intense reflections. *(Note: Paints using pigments of substantially zinc oxide or titanium dioxide have a lower reflectance for ultraviolet radiation.)*

(d) Screens, curtains, or adequate distance from aisles, walkways, etc., should be used to avoid exposing passersby to welding operations.

(e) Safety glasses with UV-protective side shields have been shown to provide some beneficial protection from ultraviolet radiation produced by welding arcs.

A9.4.3 Ionizing radiation information sources include the following:

(a) American Welding Society. F2.1-78, *Recommended Safe Practices for Electron Beam Welding and Cutting.*

(b) Manufacturer's product information literature.

A9.4.4 Nonionizing radiation information sources include:

(a) American National Standards Institute. ANSI/ASC Z136.1, *Safe Use of Lasers.* New York, NY: American National Standards Institute.

(b) American National Standards Institute. ANSI/ASC Z87.1, *Practice for Occupational and Educational Eye and Face Protection.* New York, NY: American National Standards Institute.

(c) American Welding Society. ANSI/ASC Z49.1, *Safety in Welding, Cutting, and Allied Processes.* Miami, FL: American Welding Society.

(d) Hinrichs, J. F. January 1978. Project committee on radiation — summary report. *Welding Journal* 57:62–65.

(e) Marshall, W. J., Sliney, D. H., et al. March 1980. Optical radiation levels produced by air-carbon arc cutting processes. *Welding Journal* 59:43–46.

(f) Moss, C. E., and Murray, W. E. September 1979. Optical radiation levels produced in gas welding, torch brazing, and oxygen cutting. *Welding Journal* 58:37–46.

(g) Moss, C. E. March 1979. Optical radiation transmission levels through transparent welding curtains. *Welding Journal* 58:69-s to 75-s.

(h) National Technical Information Service. Nonionizing radiation protection special study No. 42-0053-77, *Evaluation of the Potential Retina Hazards from Actinic Ultraviolet Radiation Generated by Electric Welding and Cutting Arcs.* Springfield, VA: National Technical Information Service.[10]

(i) National Technical Information Service. Nonionizing radiation protection special study No. 42-0312-77, *Evaluation of the Potential Retina Hazards from Optical Radiation Generated by Electrical Welding and Cutting Arcs.* Springfield, VA: National Technical Information Service.

[10] National Technical Information documents are available from the National Technical Information Service, Springfield, VA 22161.

SPECIFICATION FOR LOW-ALLOY STEEL ELECTRODES AND RODS FOR GAS SHIELDED ARC WELDING

SFA-5.28

(Identical with AWS Specification A5.28-96.)

1. Scope

This specification prescribes requirements for the classification of low alloy steel electrodes (solid, composite stranded, and composite metal cored) and rods (solid) for gas metal arc welding (GMAW), gas tungsten arc welding (GTAW), and plasma arc welding (PAW).

PART A — GENERAL REQUIREMENTS

2. Classification

2.1 The *solid electrodes* (and rods) covered by this specification are classified according to the chemical composition of the electrode, as specified in Table 1, and the mechanical properties of the weld metal, as specified in Tables 3 and 4. The *composite metal cored and stranded electrodes* covered by this specification are classified according to the chemical composition and mechanical properties of the weld metal, as specified in Tables 2, 3, and 4, and the shielding gas employed.

2.2 Electrodes and rods under one classification shall not be classified under any other classification in this specification, except that ER80S-D2 may also be classified as ER90S-D2, provided that classification requirements for both are met.

2.3 The welding electrodes and rods classified under this specification are intended for gas shielded arc welding, but that is not to prohibit their use with any other process (or any other shielding gas or combination of shielding gases) for which they are found suitable.

3. Acceptance

Acceptance[1] of the electrodes and rods shall be in accordance with the provisions of ANSI/AWS A5.01, *Filler Metal Procurement Guidelines.*[2]

4. Certification

By affixing the AWS specification and classification designations to the packaging or the classification to the product, the manufacturer certifies that the product meets the requirements of this specification.[3]

5. Units of Measure and Rounding-Off Procedure

5.1 U.S. customary units are the standard units of measure in this specification. The SI units are given as equivalent values to the U.S. customary units. The standard sizes and dimensions in the two systems are not identical and, for this reason, conversion from a standard size or dimension in one system will not always coincide with a standard size or dimension in the other. Suitable conversions, encompassing standard sizes of both, can be made, however, if appropriate tolerances are applied in each case.

---

[1] See Section A3, Acceptance (in the Annex), for further information concerning acceptance, testing of the material shipped, and ANSI/AWS A5.01, *Filler Metal Procurement Guidelines.*

[2] AWS Standards can be obtained from the American Welding Society, 550 N.W. LeJeune Road, Miami, FL 33126.

[3] See Section A4, Certification, (in the Annex) for further information concerning certification and the testing called for to meet this requirement.

TABLE 1
CHEMICAL COMPOSITION REQUIREMENTS FOR SOLID ELECTRODES AND RODS

AWS Classification[c]	UNS Number[d]	Weight Percent[a,b] C	Mn	Si	P	S	Ni	Cr	Mo	V	Ti	Zr	Al	Cu[e]	Other Elements Total
Carbon-Molybdenum Steel Electrodes and Rods															
ER70S-A1	K11235	0.12	1.30	0.30–0.70	0.025	0.025	0.20	—	0.40–0.65	—	—	—	—	0.35	0.50
Chromium-Molybdenum Steel Electrodes and Rods															
ER80S-B2	K20900	0.07–0.12	0.40–0.70	0.40–0.70	0.025	0.025	0.20	1.20–1.50	0.40–0.65	—	—	—	—	0.35	0.50
ER70S-B2L	K20500	0.05	0.40–0.70	0.40–0.70	0.025	0.025	0.20	1.20–1.50	0.40–0.65	—	—	—	—	0.35	0.50
ER90S-B3	K30960	0.07–0.12	0.40–0.70	0.40–0.70	0.025	0.025	0.20	2.30–2.70	0.90–1.20	—	—	—	—	0.35	0.50
ER80S-B3L	K30560	0.05	0.40–0.70	0.40–0.70	0.025	0.025	0.20	2.30–2.70	0.90–1.20	—	—	—	—	0.35	0.50
ER80S-B6[f]	S50280	0.10	0.40–0.70	0.50	0.025	0.025	0.6	4.50–6.00	0.45–0.65	—	—	—	—	0.35	0.50
ER80S-B8[g]	S50480	0.10	0.40–0.70	0.50	0.025	0.025	0.5	8.00–10.5	0.8–1.2	—	—	—	—	0.35	0.50
ER90S-B9[h,i]	S50482	0.07–0.13	1.25	0.15–0.30	0.010	0.010	1.00	8.00–9.50	0.80–1.10	0.15–0.25	—	—	0.04	0.20	0.50
Nickel Steel Electrodes and Rods															
ER80S-Ni1	K11260	0.12	1.25	0.40–0.80	0.025	0.025	0.80–1.10	0.15	0.35	0.05	—	—	—	0.35	0.50
ER80S-Ni2	K21240	0.12	1.25	0.40–0.80	0.025	0.025	2.00–2.75	—	—	—	—	—	—	0.35	0.50
ER80S-Ni3	K31240	0.12	1.25	0.40–0.80	0.025	0.025	3.00–3.75	—	—	—	—	—	—	0.35	0.50
Manganese-Molybdenum Steel Electrodes and Rods															
ER80S-D2[j] ER90S-D2	K10945	0.07–0.12	1.60–2.10	0.50–0.80	0.025	0.025	0.15	—	0.40–0.60	—	—	—	—	0.50	0.50
Other Low-Alloy Steel Electrodes and Rods															
ER100S-1	K10882	0.08	1.25–1.80	0.20–0.55	0.010	0.010	1.40–2.10	0.30	0.25–0.55	0.05	0.10	0.10	0.10	0.25	0.50
ER110S-1	K21015	0.09	1.40–1.80	0.20–0.55	0.010	0.010	1.90–2.60	0.50	0.25–0.55	0.04	0.10	0.10	0.10	0.25	0.50
ER120S-1	K21030	0.10	1.40–1.80	0.25–0.60	0.010	0.010	2.00–2.80	0.60	0.30–0.65	0.03	0.10	0.10	0.10	0.25	0.50
ERXXS-G	—	Not Specified[k]													

NOTES:

a. The filler metal shall be analyzed for the elements for which values are shown in this table. If the presence of other elements is indicated in the course of this work, the amount of those elements shall be determined to ensure that their total (excluding iron) does not exceed the limits specified for "Other Elements, Total."

b. Single values are maximum.

c. The suffixes B2, Ni1, etc., designate the chemical composition of the electrode and rod classification.

d. SAE/ASTM Unified Numbering System for Metals and Alloys.

e. Copper due to any coating on the electrode or rod plus the copper content of the filler metal itself, shall not exceed the stated limit.

f. Similar to former class ER502 in AWS Specification A5.9-81.

g. Similar to former class ER505 in AWS Specification A5.9-81.

h. Niobium (Columbium) 0.02–0.10%

i. Nitrogen 0.03–0.07%

j. This composition was formerly classified E70S-1B in AWS Specification A5.18-69.

k. In order to meet the requirements of the "G" classification, the electrode must have a minimum of one or more of the following: 0.50 percent nickel, 0.30 percent chromium, or 0.20 percent molybdenum. Composition shall be reported; the requirements are those agreed to by the purchaser and supplier.

TABLE 2
CHEMICAL COMPOSITION REQUIREMENTS FOR WELD METAL FROM COMPOSITE ELECTRODES[a]

AWS Classification[d]	UNS Number[e]	Weight Percent[b,c]													Other Elements Total
		C	Mn	Si	P	S	Ni	Cr	Mo	V	Ti	Zr	Al	Cu	
Manganese-Molybdenum Weld Metal															
E90C-D2	W19230	0.12	1.00–1.90	0.90	0.025	0.030	—	—	0.40–0.60	—	—	—	—	0.35	0.50
Chromium-Molybdenum Weld Metal															
E70C-B2L	W52130	0.05	0.40–1.00	0.25–0.60	0.025	0.030	0.20	1.00–1.50	0.40–0.65	—	—	—	—	0.35	0.50
E80C-B2	W52030	0.05–0.12	0.40–1.00	0.25–0.60	0.025	0.030	0.20	1.00–1.50	0.40–0.65	—	—	—	—	0.35	0.50
E80C-B3L	W53130	0.05	0.40–1.00	0.25–0.60	0.025	0.030	0.20	2.00–2.50	0.90–1.20	—	—	—	—	0.35	0.50
E90C-B3	W53030	0.05–0.12	0.40–1.00	0.25–0.60	0.025	0.030	0.20	2.00–2.50	0.90–1.20	—	—	—	—	0.35	0.50
Nickel Steel Weld Metal															
E80C-Ni1	W21030	0.12	1.50	0.90	0.025	0.030	0.80–1.10	—	0.30	—	—	—	—	0.35	0.50
E70C-Ni2	W22030	0.08	1.25	0.90	0.025	0.030	1.75–2.75	—	—	—	—	—	—	0.35	0.50
E80C-Ni2	W22030	0.12	1.50	0.90	0.025	0.030	1.75–2.75	—	—	—	—	—	—	0.35	0.50
E80C-Ni3	W23030	0.12	1.50	0.90	0.025	0.030	2.75–3.75	—	—	—	—	—	—	0.35	0.50
Other Low-Alloy Weld Metal															
EXXC-G		Not Specified[f]													

NOTES:
a. Chemical requirements for composite electrodes are based on analysis of their weld metal in the as-welded condition and using the shielding gas specified in Table 3.
b. The weld metal shall be analyzed for the specific elements for which values are shown in this table. If the presence of other elements is indicated in the course of this work, the amount of these elements shall be determined to ensure that their total (excluding iron) does not exceed the limit specified for "Other Elements, Total."
c. Single values shown are maximums.
d. Solid electrodes are generally recommended for gas tungsten arc welding (GTAW) or plasma arc welding (PAW).
e. SAE/ASTM Unified Numbering System for Metals and Alloys.
f. In order to meet the requirements of the G classification, the electrode must have as a minimum of one or more of the following: 0.50 percent nickel, 0.30 percent chromium, or 0.20 percent molybdenum. Composition shall be reported; the requirements are those agreed to by the purchaser and supplier.

TABLE 3
TENSION TEST REQUIREMENTS

AWS Classification	Shielding Gas[a]	Tensile Strength (minimuim)		Yield Strength (minimum)		Elongation Percent (minimum)	Testing Condition
		psi	MPa	psi	MPa		
ER70S-B2L[f] ER70C-B2L[f] ER70S-A1	Argon/1–5% O_2	75,000	515	58,000	400	19	PWHT[c]
ER80S-B2 E80C-B2		80,000	550	68,000	470	19	
ER80S-B3L[f] E80C-B3L[f]		80,000	550	68,000	470	17	
ER90S-B3 E90C-B3		90,000	620	78,000	540	17	
ER80S-B6 ER80S-B8		80,000	550	68,000	470	17	
ER90S-B9	Argon/5% O_2	90,000	620	60,000	410	16	
E70C-Ni2	Argon/1–5% O_2	70,000	480	58,000	400	24	PWHT[c]
ER80S-Ni1 E80C-Ni1		80,000	550	68,000	470	24	As-Welded
ER80S-Ni2 E80C-Ni2 ER80S-Ni3 E80C-Ni3		80,000	550	68,000	470	24	PWHT[c]
ER80S-D2	CO_2	80,000	550	68,000	470	17	As-Welded
ER90S-D2 E90C-D2	Argon/1–5% O_2	90,000	620	78,000	540	17	As-Welded
ER100S-1	Argon/2% O_2	100,000	690	88,000	610	16	As-Welded
ER110S-1		110,000	760	95,000	660	15	
ER120S-1		120,000	830	105,000	730	14	
ER70S-G E70C-G	(d)	70,000	480	(e)	(e)	(e)	(e)
ER80S-G E80C-G	(d)	80,000	550	(e)	(e)	(e)	(e)
ER90S-G E90C-G	(d)	90,000	620	(e)	(e)	(e)	(e)
ER100S-G E100C-G	(d)	100,000	690	(e)	(e)	(e)	(e)
ER110S-G E110C-G	(d)	110,000	760	(e)	(e)	(e)	(e)
ER120S-G E120C-G	(d)	120,000	830	(e)	(e)	(e)	(e)

NOTES:
a. The use of a particular shielding gas for classification purposes shall not be construed to restrict the use of shielding gas mixtures. A filler metal tested with other gas blends, such as Argon/O_2 or Argon/CO_2 may result in weld metal having different strength and elongation. Classification with other gas blends shall be as agreed upon between the purchaser and supplier.
b. Yield strength at 0.2% offset and elongation in 2 in. (51 mm) gage length.
c. Postweld heat-treated condition in accordance with Table 7.
d. Shielding gas shall be as agreed to between purchaser and supplier.
e. Not specified (As agreed to between purchaser and supplier).
f. These classifications were previously ER80S-B2, E80C-B2, ER90S-B3L, and E90C-B3L respectively in AWS A5.28–79. The strength levels have been adjusted downward as shown, in order to accurately reflect the capability of the classification's chemical composition ranges.

TABLE 4
IMPACT TEST REQUIREMENTS

AWS Classification	Average Impact Strength[a] (minimum)	Testing Condition
ER70S-A1 ER70S-B2L E70C-B2L ER80S-B2 E80C-B2 ER80S-B3L E80C-B3L ER90S-B3 E90C-B3 ER80S-B6 ER80S-B8 ER90S-B9	Not Required	—
ER80S-Ni1 E80C-Ni1	20 ft·lbf at −50°F(27 J @ −46°C)	As-Welded
ER80S-Ni2 E70C-Ni2 E80C-Ni2	20 ft·lbf at −80°F(27 J @ −62°C)	PWHT[b]
ER80S-Ni3 E80C-Ni3	20 ft·lbf at −100°F(27 J @ −73°C)	PWHT[b]
ER80S-D2 ER90S-D2 E90C-D2	20 ft·lbf at −20°F(27 J @ −29°C)	As-Welded
ER100S-1 ER110S-1 ER120S-1	50 ft·lbf at −60°F(68 J @ −51°C)	As-Welded
ERXXXS-G EXXC-G	As agreed between purchaser and supplier	—

NOTES:
a. Both the highest and lowest of the five test values obtained shall be disregarded in computing the impact strength.
For classifications requiring 20 ft-lbf (27 J); Two of the remaining three values shall equal or exceed 20 ft-lbf (27 J); one of the three remaining values may be lower than 20 ft-lbf (27 J) but not lower than 15 ft-lbf (20 J). The average of the three shall not be less than the 20 ft-lbf (27 J) specified.
For classifications requiring 50 ft-lbf (68 J): Two of the remaining three values shall equal or exceed 50 ft-lbf (68 J); one of the three remaining values may be lower than 50 ft-lbf (68 J) but not lower than 40 ft-lbf (54 J). The average of the three shall not be less than the 50 ft-lbf (68 J) specified.
b. Postweld heat treated in accordance with Table 7.

5.2 For the purpose of determining conformance with this specification, an observed or calculated value shall be rounded to the nearest 1000 psi for tensile and yield strength, and to the "nearest unit" in the last right-hand place of figures used in expressing the limiting value for other quantities in accordance with the rounding-off method given in ASTM E29, *Recommended Practice for Using Significant Digits in Test Data to Determine Conformance with Specifications.*[4]

PART B — TESTS, PROCEDURES, AND REQUIREMENTS

6. Summary of Tests

6.1 The tests required for each classification are specified in Table 5. The purpose of these tests is to determine the chemical composition, the mechanical properties, and soundness of the weld metal. The base metal for the weld test assemblies, the welding and testing procedures to be employed, and the results required are given in Sections 8 through 12.

6.2 The optional test for diffusible hydrogen in Section 13, Diffusible Hydrogen Test, is not required for classification [see note (a) of Table 5].

7. Retest

If the results of any test fail to meet the requirement, that test shall be repeated twice. The results of both retests shall meet the requirement. Specimens for retest may be taken from the original test assembly or from one or two new test assemblies. For chemical analysis, retest need be only for those specific elements that failed to meet the test requirement. If the results of one or both retests fail to meet the requirement, the material under test shall be considered as not meeting the requirements of this specification for that classification. In the event that, during preparation or after completion of any test, it is clearly determined that prescribed or proper procedures were not followed in preparing the weld test assembly or test specimen(s), or in conducting the test, the test shall be considered invalid, without regard to whether the test was actually completed, or whether test results met, or failed to meet, the requirement, that test shall be repeated, following proper prescribed procedures. In this case, the requirement for doubling the number of test specimens does not apply.

8. Weld Test Assemblies

8.1 At least one weld test assembly is required, and two may be required (depending on the electrode — solid as opposed to composite — and the manner in which the sample for chemical analysis is taken), as specified in Table 5. They are as follows:

[4] ASTM specifications may be obtained from the American Society for Testing and Materials (ASTM), 100 Barr Harbor Drive, Conshohocken, PA 19428-2959.

TABLE 5
REQUIRED TESTS

AWS Classification	Chemical Analysis		Radiographic Test	Tension Test	Impact Test	Diffusible Hydrogen Test
	Electrode	Weld Metal				
Solid Electrodes						
ER70S-A1 ER70S-B2L ER80S-B2 ER80S-B3L ER90S-B3 ER80S-B6 ER80S-B8 ER90S-B9	Required	Not Required	Required	Required	Not Required	a
ER80S-Ni1 ER80S-Ni2 ER80S-Ni3	Required	Not Required	Required	Required	Required	a
ER80S-D2 ER90S-D2	Required	Not Required	Required	Required	Required	a
ER100S-1 ER110S-1 ER120S-1	Required	Not Required	Required	Required	Required	a
ERXXS-G	Required[b]	Not Required	Required	Required	Not Required	a
Composite Metal Cored Electrodes						
E70C-B2L E80C-B2 E80C-B3L E90C-B3	Not Required	Required	Required	Required	Not Required	a
E70C-Ni2 E80C-Ni1 E80C-Ni2 E80C-Ni3	Not Required	Required	Required	Required	Required	a
E90C-D2	Not Required	Required	Required	Required	Required	a
EXXC-G	Not Required	Required[b]	Required	Required	Not Required	a

NOTES:
a. Optional diffusible hydrogen test is required only when specified by the puchaser and the manufacturer puts the diffusible hydrogen designator on the label (See A2.2 and A8.2 in the Annex).
b. To be reported. See A7.15 in the Annex.

(1) The groove weld in Fig. 1 for mechanical properties and soundness of the weld metal for both composite and solid electrodes

(2) The weld pad in Fig. 2 for chemical analysis of the weld metal from composite stranded and composite metal cored electrodes

The sample for chemical analysis of weld metal from composite electrodes may be taken from the reduced section of the fractured all-weld-metal tension test specimen or from the corresponding location in the groove weld in Fig. 1, thereby avoiding the need to make a weld pad. Alternatively, the sample from the groove weld may be taken from any location in the weld metal above the tension test specimen. In case of dispute, the weld pad in Fig. 2 shall be the referee method.

8.2 Preparation of each weld test assembly shall be as prescribed in 8.3, 8.4, and 8.5. The base metal for each assembly shall be as required in Table 6, and shall meet the requirements of the ASTM specification shown there, or an equivalent specification. Testing of the assembly shall be as prescribed in 9.2, 9.3, and Sections 10 through 12.

8.3 Groove Weld

8.3.1 For all classifications, a test assembly shall be prepared and welded as specified in Fig. 1, using base metal of the appropriate type specified in Table 6, and the preheat and interpass temperature specified in Table 7. The electrode used shall be 0.045 in. (1.1 mm) or $\frac{1}{16}$ in. (1.6 mm) size (or the size that the manufacturer produces that is closest to one of these, if these sizes are not produced).

Welding shall be in the flat position, and the assembly shall be restrained (or preset) during welding to prevent warpage in excess of 5 degrees. An assembly that has warped more than 5 degrees from plane shall be discarded. It shall not be straightened. The test assembly shall be tack welded, and welding shall begin at the preheat temperature specified in Table 7.

This interpass temperature shall be maintained for the remainder of the weld. Should it be necessary to interrupt welding, the assembly shall be allowed to cool in still air to room temperature. The assembly shall be preheated to the temperature shown in Table 7 before welding is resumed. When welding has been completed and the assembly has cooled, the assembly shall be prepared and tested as specified in Sections 10, 11, and 12 in the as-welded or postweld heat-treated condition, as specified in Tables 3 and 4.

8.3.2 When required, the test assembly shall be postweld heat-treated before removal of mechanical test specimens. This postweld heat treatment may be done either before or after the radiographic examination.

8.3.2.1 The furnace shall be at a temperature not higher than 600°F (320°C) when the test assembly is placed in it. The heating rate, from that point to the specified holding temperature in Table 7, shall not exceed 400°F per hour (220°C per hour).

8.3.2.2 The test assembly shall be maintained at the temperature specified in Table 7 for 1 hour (−0, +15 minutes).

8.3.2.3 When the one hour holding time has been completed, the assembly shall be allowed to cool in the furnace to a temperature below 600°F (320°C) at a rate not exceeding 350°F (190°C) per hour. The assembly may be removed from the furnace at any temperature below 600°F (320°C) and allowed to cool in still air to room temperature. Testing of the assembly shall be as specified in Sections 10 through 12.

8.4 Weld Pad. A weld pad shall be prepared using composite stranded and composite metal cored electrodes as shown in Fig. 2, except when, as permitted in 8.1, the sample for analysis is taken from the groove weld (Fig. 1) or the fractured tension test specimen. Base metal of any convenient size which will satisfy the minimum requirements of Fig. 2, and is of a type specified in Table 6, shall be used as the base for the weld pad. The surface of the base metal on which the filler metal is deposited shall be clean. The pad shall be welded in the flat position with multiple layers to obtain undiluted weld metal (4 layers minimum thickness). The electrode size shall be 0.045 in. (1.1 mm) or $\frac{1}{16}$ in. (1.6 mm), or the size that the manufacturer produces that is closest to one of these, if these sizes are not produced. The preheat temperature shall not be less than 60°F (16°C) and the interpass temperature shall not exceed that specified in Table 7. Any slag shall be removed after each pass. The pad may be quenched in water between passes (temperature of the water is not specified). The dimensions of the completed pad shall be as shown in Fig. 2. Testing of this assembly shall be as specified in 9.2 and 9.3. The results shall meet the requirements of 9.4.

9. Chemical Analysis

9.1 A sample of the solid electrode or rod shall be prepared for chemical analysis. Solid filler metal, when analyzed for elements that are present in a coating (copper flashing, for example), shall be analyzed without removing the coating. When the filler metal is analyzed

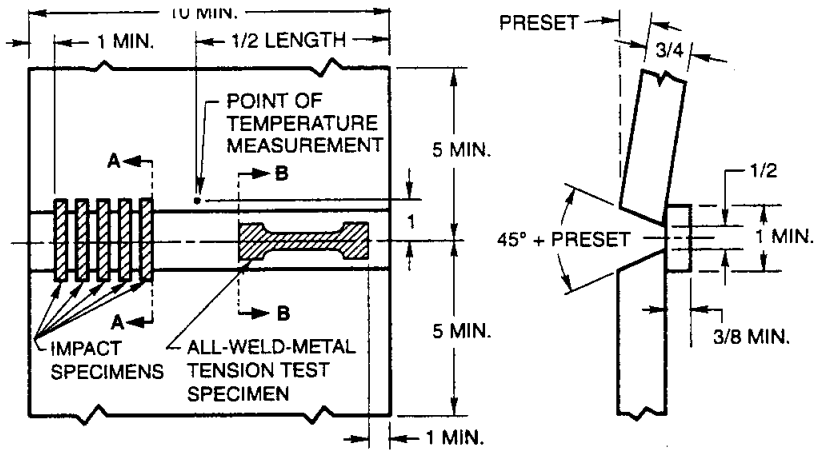

SI EQUIVALENTS	
in.	mm
1/8	3.2
1/4	6.4
3/8	9.5
1/2	13
3/4	19.1
1	25
5	125
10	250

(A) TEST PLATE SHOWING LOCATION OF TEST SPECIMENS

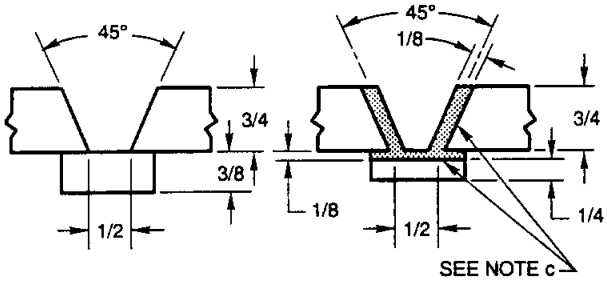

STANDARD TEST PLATE BUTTERED TEST PLATE
(See footnote "a" of Table 6)

(B) GROOVE PREPARATION OF TEST PLATE

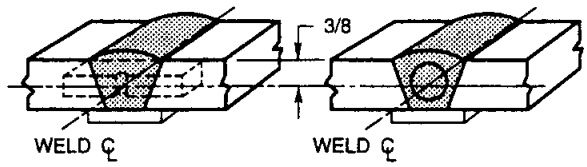

(C) ORIENTATION OF IMPACT SPECIMEN

(D) LOCATION OF ALL-WELD-METAL TENSION SPECIMEN

	Test Conditions for Solid Electrodes (i)	
Standard Size (h)	0.045 in. (1.1 mm)	1/16 in. (1.6 mm)
Shielding Gas (g)	See Table 3	See Table 3
Wire Feed Rate	450 in./min (190 mm/sec) ±5%	240 in./min (102 mm/sec) ±5%
Nominal Arc Voltage	27 to 32 V	25 to 30 V
Approx. Resulting Current, DCEP (d) (DCEP = electrode positive)	300 to 360A (e)	340 to 420A (e)
Tip-to-Work Distance (f)	7/8 ± 1/8 in. (22 ± 3 mm)	7/8 ± 1/8 in. (22 ± 3 mm)
Travel Speed	13 ± 2 in./min (5.5 ± 1.0 mm/sec)	13 ± 2 in./min (5.5 ± 1.0 mm/sec)
Preheat and Interpass Temperature	See Table 7	See Table 7

Notes:
a. All dimensions (excluding angles) are in inches.
b. Prior to welding, the assembly may be preset as shown so that the welded joint will be sufficiently flat to facilitate test specimen removal. As an alternative, restraint or a combination of restraint and preset may be used.
c. When required, edges of the grooves and the contacting face of the backing shall be buttered as shown. Any size of the electrode being tested may be used for buttering. See Table 6, Note (a).
d. The required combinations of electrode feed rate, arc voltage, and tip-to-work distance should produce welding currents in the ranges shown. Currents substantially outside these ranges suggest errors in feed rate, tip-to-work distance, voltage settings, or in instrumentation.
e. For ER80S-D2 classification, the amperage range for 0.045" (1.1 mm) shall be 260 to 320A and for 1/16 in. (1.6 mm) dia., 330 to 410A.
f. Distance from the contact tip to work, not from the shielding gas cup to the work.
g. If shielding gases or blends other than those shown in Table 3 are used, the wire feed speed (and resulting current), arc voltage, and travel speed are to be as agreed to between purchaser and supplier.
h. If sizes other than 0.045 in. (1.1 mm) and 1/16 in. (1.6 mm) are tested, wire feed speed (and resulting current), arc voltage, and tip-to-work distance shall be changed as needed.This joint configuration is not recommended for sizes smaller than 0.035 in. (0.9 mm).
i. Test conditions for composite stranded and metal cored electrodes shall be as recommended by the manufacturer. Preheat and interpass temperature shall be in accordance with Table 7.

FIG. 1 GROOVE WELD TEST ASSEMBLY FOR MECHANICAL PROPERTIES AND SOUNDNESS

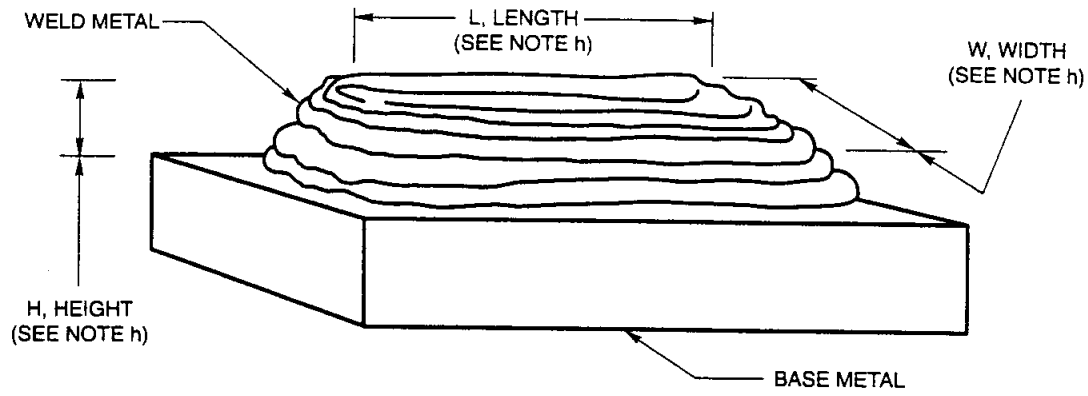

Notes:
a. Base metal of any convenient size, of any type, specified in Table 6, shall be used as the base metal for the weld pad.
b. The surface of the base metal on which the filler metal is to be deposited shall be clean.
c. The pad shall be welded in the flat position with successive layers to obtain weld metal of sufficient height.
d. The number and size of the beads will vary according to the size of the electrode and the width of the weave, as well as the amperage employed.
e. The preheat temperature shall not be less than 60°F (16°C) and the interpass temperature shall not exceed 325°F (164°C).
f. Any slag shall be removed after each pass.
g. The test assembly may be quenched in water between passes to control interpass temperature.
h. The minimum completed pad size shall be at least four layers in height (H). Length (L), after allowance for start and stop areas, and width (W) shall be sufficient to perform analysis. The sample for analysis shall be taken at least 3/8 in. (9 mm) above the original base metal surface.

FIG. 2 PAD FOR CHEMICAL ANALYSIS OF WELD METAL FROM COMPOSITE ELECTRODES

for elements other than those in the coating, the coating shall be removed if its presence affects the results of the analysis for the other elements.

9.2 Composite stranded and metal cored electrodes shall be analyzed in the form of weld metal, not filler metal. The sample for analysis shall be taken from weld metal obtained with the electrode and a shielding gas as specified in Tables 2 and 3. The sample may be taken from the weld pad prepared in accordance with 8.4, from an area of the groove weld as specified in 8.1, or from the reduced section of the fractured tension test specimen. In case of dispute, the weld pad is the referee method.

The top surface of the pad described in 8.4 and shown in Fig. 2 shall be removed and discarded. A sample for analysis shall be obtained from the underlying metal, no closer than $^3/_8$ in. (9.5 mm) to the surface of the base metal in Fig. 2, by any appropriate mechanical means. The sample shall be free of slag.

When the sample is taken from the groove weld or the reduced section of the fractured tension test specimen, that material shall be prepared for analysis by any suitable mechanical means.

9.3 The sample obtained as specified in 9.1 or 9.2 shall be analyzed by accepted analytical methods. The referee method shall be ASTM E350, *Standard Method for Chemical Analysis of Carbon Steel, Low Alloy Steel, Silicon Electrical Steel, Ingot Iron and Wrought Iron.*

9.4 The results of the analysis shall meet the requirements of Table 1 for solid electrode or Table 2 for composite electrodes for the classification of electrode under test.

10. Radiographic Test

10.1 The groove weld described in 8.3.1 and shown in Fig. 1 shall be radiographed to evaluate the soundness of the weld metal. In preparation for radiography, the backing shall be removed, and both surfaces of the weld shall be machined or ground smooth. Both surfaces of the test assembly, in the area of the weld, shall be smooth enough to avoid difficulty in interpreting the radiograph.

10.2 The weld shall be radiographed in accordance with ASTM E142, *Standard Method for Controlling Quality of Radiographic Testing.* The quality level of inspection shall be 2-2T.

10.3 The soundness of the weld metal meets the requirements of this specification if the radiograph

TABLE 6
BASE METAL FOR TEST ASSEMBLIES

AWS Classification	Base Metal ASTM Standard[a]	Base Metal UNS Number[b]
ER70S-B2L E70C-B2L ER80S-B2 E80C-B2	A387 Grade 11	K11789
ER80S-B3L E80C-B3L ER90S-B3 E90C-B3	A387 Grade 22	K21590
ER80S-B6	A387 Grade 5	S50200
ER80S-B8	A387 Grade 9	S50400
ER90S-B9	A387 Grade 91	S50460
ER80S-Ni1 E80C-Ni1	A516 Grade 60, 65, or 70	K02100, K02403, or K02700
	A537 Class 1 or 2	K12437, K21703, or K22103
	A203 Grade A or B, or HY-80 steel in accordance with MIL-S-16216	J42015
E70C-Ni2 ER80S-Ni2 E80C-Ni2	A203 Grade A or B or HY-80 steel in accordance with MIL-S-16216	K22103, K21703, or J42015
ER80S-Ni3 E80C-Ni3	A203 Grade D or E or HY-80 steel in accordance with MIL-S-16216	K31718 or K32018 J42015
ER70S-A1 ER80S-D2 E90C-D2 ER90S-D2	ASTM A36, A285 Grade C, A515 Grade 70, or A516 Grade 70	K02600, K03101, K02700
ER100S-1 ER100S-G E100C-G ER110S-1 ER110S-G E110C-G ER120S-1 ER120S-G E120C-G	HY-80 or HY100 steel in accordance with MIL-S-16216	J42015 or J42240
ERXXS-G EXXC-G	See note[a]	

NOTES:
a. For any weld metal classification in this specification, ASTM A36, A285 Grade C, A515 Grade 70, or A516 Grade 70 may be used. In that case, the groove faces and the contacting face of the backing shall be buttered, as shown in Figure 1, using the electrode being classified or an electrode of the same weld metal composition as that specified for the electrode being tested, or using an electrode of the specified composition classified in another AWS low-alloy steel filler metal specification. Alternately, for the indicated weld metal classification, the corresponding base metals may be used for weld test assemblies without buttering. In case of dispute, buttered A36 steel shall be the referee material.
b. ASTM/SAE Unified Numbering System for Metals and Alloys.

TABLE 7
PREHEAT, INTERPASS, AND POSTWELD HEAT TREATMENT TEMPERATURES

AWS Classification	Preheat and Interpass Temperature[a] °F	Preheat and Interpass Temperature[a] °C	PWHT Temperature[a] °F	PWHT Temperature[a] °C
ER70S-A1 ER80S-B2 ER70S-B2L E80C-B2 E70C-B2L	275–325	135–165	1150 ± 25	620 ± 15
ER90S-B3 ER80S-B3L E90C-B3 E80C-B3L	375–425	185–215	1275 ± 25	690 ± 15
ER80S-B6	350–450	177–232	1375 ± 25	745 ± 15
ER80S-B8	400–500	205–260	1375 ± 25	745 ± 15
ER90S-B9	300–500	150–260	1375 ± 25	745 ± 15
ER80S-Ni2 ER80S-Ni3 E70C-Ni2 E80C-Ni2 E80C-Ni3	275–325	135–165	1150 ± 25	620 ± 15
ER80S-D2 ER90S-D2 E90C-D2 ER80S-Ni1 E80C-Ni1 ER100S-1 ER110S-1 ER120S-1	275–325	135–165	None[b]	None[b]
ERXXXS-G EXXC-G	Conditions as agreed upon between supplier and purchaser			

NOTES:
a. These temperatures are specified for testing under this specification and are not to be considered as recommendations for preheat, interpass, and postweld heat treatment in production welding. The requirements for production welding must be determined by the user. They may or may not differ from those called for here.
b. These classifications are normally used in the as-welded condition.

shows no cracks, no incomplete fusion, and no rounded indications in excess of those permitted by the radiographic standards in Fig. 3. In evaluating the radiograph, 1 in. (25 mm) of the weld on each end of the test assembly shall be disregarded.

10.3.1 A rounded indication is an indication (on the radiograph) whose length is no more than 3 times its width. Rounded indications may be circular, elliptical, conical, or irregular in shape, and they may have tails. The size of a rounded indication is the largest dimension of the indication, including any tail that may be present. The indication may be of porosity or slag. Indications whose largest dimension does not exceed $^1/_{64}$ in. (0.4 mm) shall be disregarded. Test assemblies with indications larger than the largest indications permitted in the radiographic standards (Fig. 3) do not meet the requirements of this specification.

11. Tension Test

11.1 One all-weld-metal tension test specimen shall be machined from the groove weld described in 8.3.1 and shown in Fig. 1 as required in Table 5. The dimensions of the specimen shall be as shown in Fig. 4.

11.2 Before testing, the specimen may be aged at 200 to 220°F (93 to 104°C) for up to 48 hours, then allowed to cool to room temperature. Refer to A8.3 for a discussion on the purpose of aging treatments.

11.3 The specimen shall be tested in the manner described in the tension test section of ANSI/AWS B4.0, *Standard Methods for Mechanical Testing of Welds.*

11.4 The results of the all-weld-metal tension test shall meet the requirements specified in Table 3. Test reports shall indicate if the specimen was tested in the aged condition.

12. Impact Test

12.1 Five Charpy V-notch impact test specimens (Fig. 5) shall be machined from the test assembly shown in Fig. 1, for those classifications for which impact testing is required in Table 5.

12.2 The five specimens shall be tested in accordance with the impact test section of ANSI/AWS B4.0, *Standard Methods for Mechanical Testing of Welds.* The test temperature shall be that specified in Table 4 for the classification under test.

12.3 In evaluating the test results, the lowest and the highest values obtained shall be disregarded. For classifications requiring 20 ft·lbf (27 J), two of the remaining three values shall equal, or exceed, the specified 20 ft·lbf (27 J) energy level. One of the three may be lower, but not lower than 15 ft·lbf (20 J), and the average of the three shall be not less than the required 20 ft·lbf (27 J) energy level. For classifications requiring 50 ft·lbf (68 J), two of the remaining three values shall equal, or exceed, the specified 50 ft·lbf (68 J) energy level. One of the three may be lower, but not lower than 40 ft·lbf (54 J), and the average of the three shall be not less than the required 50 ft·lbf (68 J) energy level.

13. Diffusible Hydrogen Test

13.1 For each electrode to be identified by an optional diffusible hydrogen designator, the 0.045 in. (1.1 mm) or $^1/_{16}$ in. (1.6 mm) size (or the size that the manufacturer produces that is closest to one of these, if these sizes are not produced) shall be tested according to one of the methods given in ANSI/AWS A4.3, *Standard Methods for Determination of the Diffusible Hydrogen Content of Martensitic, Bainitic, and Ferritic Steel Weld Metal Produced by Arc Welding.* The optional supplemental diffusible hydrogen designator may be added to the classification according to the average test value as compared to the requirements of Table 8. If the actual test results for an electrode meet the requirements for the lower or lowest hydrogen designator as specified in Table 8, the electrode also meets the requirements for all higher hydrogen designators in Table 8 without the need for retest.

13.2 Testing shall be done without rebaking, or otherwise conditioning the electrode, unless the manufacturer recommends otherwise. If the electrode is rebaked, that fact, along with the method used for rebaking, shall be noted on the test report.

13.3 For purposes of certifying compliance with optional diffusible hydrogen requirements, the reference atmospheric condition shall be an absolute humidity of 10 grains of water vapor per pound (1.43 g/kg) of dry air at the time of welding. The actual atmospheric conditions shall be reported, along with the average value for the test according to ANSI/AWS A4.3.[5]

13.4 When the absolute humidity equals or exceeds the reference condition at the time of preparation of the test assembly, the test shall be acceptable as demonstrating compliance with the requirements of this specification, provided the actual test results satisfy the

[5] See A8.2 (in the Annex).

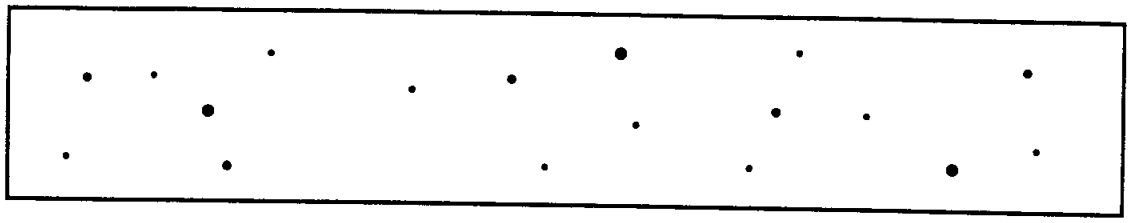

(A) ASSORTED ROUNDED INDICATIONS

SIZE 1/64 in. (0.4 mm) TO 1/16 in. (1.6 mm) IN DIAMETER OR IN LENGTH.
MAXIMUM NUMBER OF INDICATIONS IN ANY 6 in. (150 mm) OF WELD = 18, WITH THE FOLLOWING RESTRICTIONS:
MAXIMUM NUMBER OF LARGE 3/64 in. (1.2 mm) TO 1/16 in. (1.6 mm) IN DIAMETER OR IN LENGTH INDICATIONS = 3.
MAXIMUM NUMBER OF MEDIUM 1/32 in. (0.8 mm) TO 3/64 in. (1.2 mm) IN DIAMETER OR IN LENGTH INDICATIONS = 5.
MAXIMUM NUMBER OF SMALL 1/64 in. (0.4 mm) TO 1/32 in. (0.8 mm) IN DIAMETER OR IN LENGTH INDICATIONS = 10.

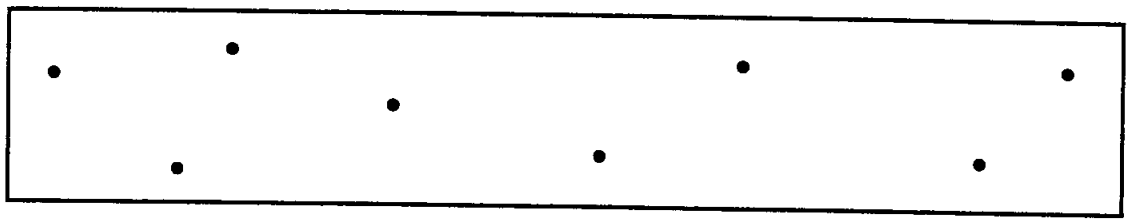

(B) LARGE ROUNDED INDICATIONS

SIZE 3/64 in. (1.2 mm) TO 1/16 in. (1.6 mm) IN DIAMETER OR IN LENGTH.
MAXIMUM NUMBER OF INDICATIONS IN ANY 6 in. (150 mm) OF WELD = 8.

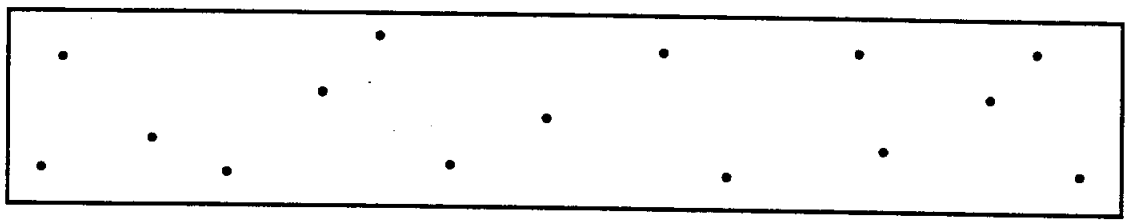

(C) MEDIUM ROUNDED INDICATIONS

SIZE 1/32 in. (0.8 mm) TO 3/64 in. (1.2 mm) IN DIAMETER OR IN LENGTH.
MAXIMUM NUMBER OF INDICATIONS IN ANY 6 in. (150 mm) OF WELD = 15.

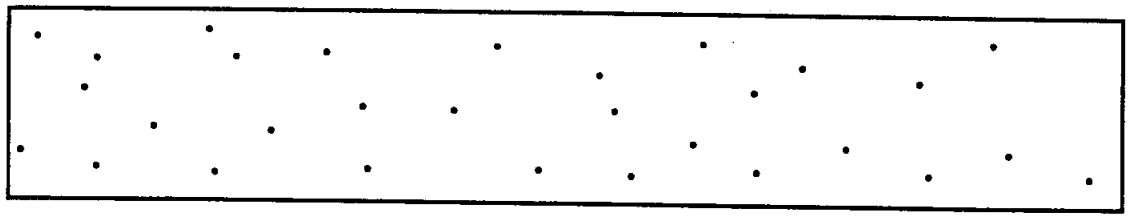

(D) SMALL ROUNDED INDICATIONS

SIZE 1/64 in. (0.4 mm) TO 1/32 in. (0.8 mm) IN DIAMETER OR IN LENGTH.
MAXIMUM NUMBER OF INDICATIONS IN ANY 6 in. (150 mm) OF WELD = 30.

Notes:
1. In using these standards, the chart which is most representative of the size of the rounded indications present in the test specimen radiograph shall be used for determining conformance to these radiographic standards.
2. Since these are test welds specifically made in the laboratory for classification purposes, the radiographic requirements for these test welds are more rigid than those which may be required for general fabrication.
3. Indications whose largest dimension does not exceed 1/64 in. (0.4 mm) shall be disregarded.
4. These standards are equivalent to the Grade 1 standards of ANSI/AWS A5.1, *Specification for Carbon Steel Electrodes for Shielded Metal Arc Welding.*

FIG. 3 RADIOGRAPHIC ACCEPTANCE STANDARDS

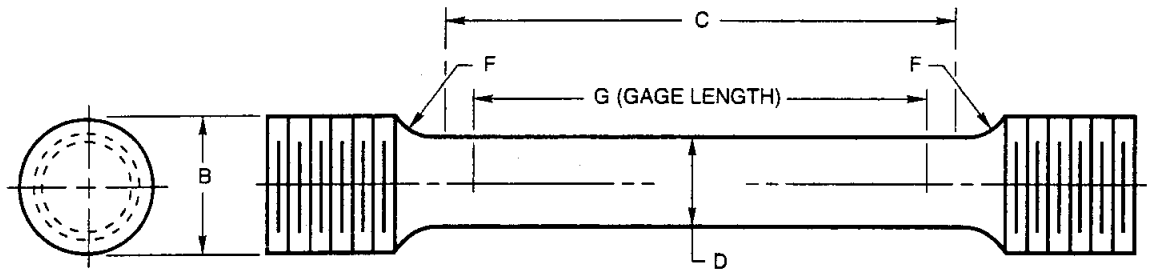

Dimensions of Specimen, in.

D	G	C	B	F, min.
0.500 ± 0.010	2.000 ± 0.005	2-1/4	3/4	0.375

Dimensions of Specimen, mm

D	G	C	B	F, min.
12.7 ± 0.2	50.8 ± 0.1	57	19	9.5

Notes:
a. Dimensions G and C shall be as shown, but ends may be of any shape to fit the testing machine holders as long as the load is axial.
b. The diameter of the specimen within the gage length shall be slightly smaller at the center than at the ends. The difference shall not exceed one percent of the diameter.
c. When the extensometer is required to determine yield strength, dimension C may be increased. However, the percent of the elongation shall be based on dimension G.
d. The surface finish within the C dimension shall be no rougher than 63 μin. (1.6 μm).

FIG. 4 TENSION TEST SPECIMEN

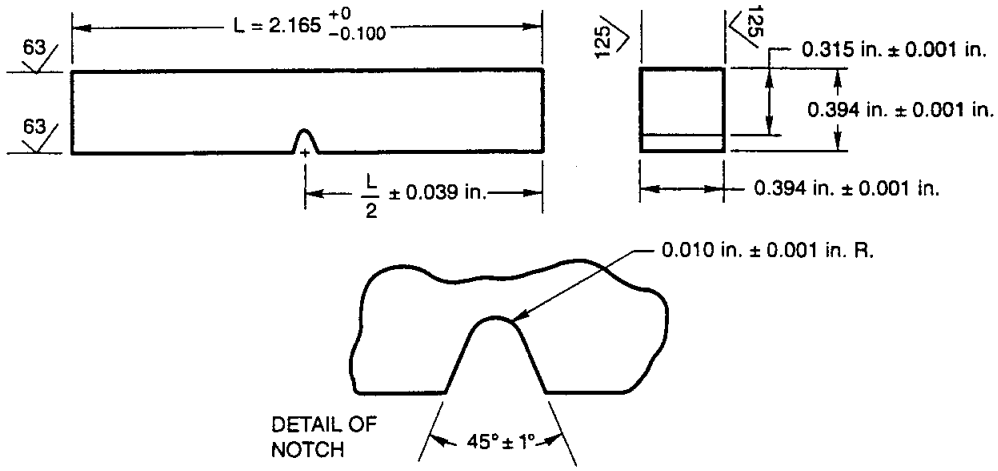

SI EQUIVALENTS

in.	mm
0.001	0.025
0.010	0.255
0.039	1.0
0.100	2.5
0.315	8.0
0.394	10.0
2.165	55.0

Notes:
1. The notched surface and the surface to be struck shall be parallel within 0.002 in. (0.05 mm) and have at least 63 μin. (1.6 μm) finish. The other two surfaces shall be square with the notched or struck surface within ±10 minutes of the degree and have at least 125 μin. (3.2 μm) finish.
2. The notch shall be smoothly cut by mechanical means and shall be square with the longitudinal edge of the specimen within one degree.
3. The geometry of the notch shall be measured on at least one specimen in a set of five specimens. Measurement shall be done at minimum 50 times magnification on either a shadowgraph or a metallograph.
4. The correct location of the notch shall be verified by etching before or after machining.
5. If a specimen does not break upon being struck, the value for energy absorbed shall be reported as the capacity of the impact testing machine followed by a plus sign (+).

FIG. 5 CHARPY V-NOTCH IMPACT TEST SPECIMEN

TABLE 8
OPTIONAL DIFFUSIBLE HYDROGEN REQUIREMENTS[a]

AWS Electrode Classification	Optional Supplemental Diffusible Hydrogen Designator[b]	Average Diffusible Hydrogen, Maximum (ml/100g Deposited Metal)[c]
All	H16	16.0
All	H8	8.0
All	H4	4.0
All	H2	2.0

NOTES:
a. See Note a to Table 5.
b. This designator is added to the end of the complete electrode classification designation.
c. Some classifications may not meet the lower average diffusible hydrogen levels (H8, H4, and H2).

diffusible hydrogen requirements for the applicable optional supplemental designator.

PART C — MANUFACTURE, IDENTIFICATION, AND PACKAGING

14. Method of Manufacture

The electrodes and rods classified according to this specification may be manufactured by any method that will produce electrodes and rods that meet the requirements of this specification.

15. Standard Sizes

15.1 Standard sizes for electrodes and rods in the different package forms (straight lengths, coils with support, coils without support, drums and spools — see Section 17, Standard Package Forms) are shown in Table 9.

16. Finish and Uniformity

16.1 All electrodes and rods shall have a smooth finish which is free from slivers, depressions, scratches, scale, seams, laps (exclusive of the longitudinal joint in composite metal cored electrodes), and foreign matter that would adversely affect the welding characteristics, the operation of the welding equipment, or the properties of the weld metal.

16.2 Each continuous length of filler metal shall be from a single heat or lot of material, and welds, when present, shall have been made so as not to interfere with the uniform, uninterrupted feeding of the filler metal on automatic and semiautomatic equipment.

16.3 The components in composite electrodes (including the core ingredients in metal cored electrodes) shall be distributed with sufficient uniformity throughout the length of the electrode so as not to adversely affect the performance of the electrode or the properties of the weld metal.

16.4 A suitable protective coating may be applied to any filler metal in this specification. Copper may be used as a coating for any classification.

17. Standard Package Forms

17.1 Standard package forms are straight lengths, coils with support, coils without support, spools, and drums. Standard package dimensions and weights for each form are given in Table 10. Package forms, sizes, and weights other than these shall be as agreed between purchaser and supplier.

17.2 The liners in coils with support shall be designed and constructed to prevent distortion of the coil during normal handling and use and shall be clean and dry enough to maintain the cleanliness of the filler metal.

17.3 Spools shall be designed and constructed to prevent distortion of the filler metal during normal handling and use and shall be clean and dry enough to maintain the cleanliness of the filler metal.

18. Winding Requirements

18.1 Electrodes on spools and in coils (including drums and reels) shall be wound so that kinks, waves, sharp bends, overlapping or wedging are not encountered, leaving the filler metal free to unwind without restriction. The outside end of the filler metal (the end with which welding is to begin) shall be identified so it can be readily located and shall be fastened to avoid unwinding.

18.2 The cast and helix of electrodes in coils, spools, and drums shall be such that the electrode will feed in an uninterrupted manner in automatic and semiautomatic equipment.

18.3 The cast and helix of solid filler metal in 4 in. (100 mm) spools shall be such that a specimen long enough to produce a single loop, when cut from the spool and laid unrestrained on a flat surface, will:

(1) form a circle not less than 4 in. (100 mm) nor more than 9 in. (230 mm) in diameter, and

TABLE 9
STANDARD SIZES[a]

Standard Package Form	Diameter			Tolerance (±)			
				Solid		Composite	
	in.		mm	in.	mm	in.	mm
Straigth Lengths[b]		0.045	1.1	0.001	0.02	0.002	0.05
	1/16	0.062	1.6	0.002	0.05	0.002	0.05
	5/64	0.078	2.0	0.002	0.05	0.003	0.08
	3/32	0.094	2.4	0.002	0.05	0.003	0.08
	1/8	0.125	3.2	0.002	0.05	0.003	0.08
	5/32	0.156	4.0	0.002	0.05	0.003	0.08
	3/16	0.188	4.8	0.002	0.05	0.003	0.08
Coils with and without Support		0.030	0.8	0.001	0.02	0.002	0.05
		0.035	0.9	0.001	0.02	0.002	0.05
		0.045	1.1	0.001	0.02	0.002	0.05
		0.052	1.3	0.002	0.05	0.002	0.05
	1/16	0.062	1.6	0.002	0.05	0.002	0.05
	5/64	0.078	2.0	0.002	0.05	0.003	0.08
	3/32	0.094	2.4	0.002	0.05	0.003	0.08
	7/64	0.109	2.8	0.002	0.05	0.003	0.08
	1/8	0.125	3.2	0.002	0.05	0.003	0.08
Drums		0.035	0.9	0.001	0.02	0.002	0.05
		0.045	1.1	0.001	0.02	0.002	0.05
		0.052	1.3	0.002	0.05	0.002	0.05
	1/16	0.062	1.6	0.002	0.05	0.002	0.05
	5/64	0.078	2.0	0.002	0.05	0.003	0.08
	3/32	0.094	2.4	0.002	0.05	0.003	0.08
	7/64	0.109	2.8	0.002	0.05	0.003	0.08
	1/8	0.125	3.2	0.002	0.05	0.003	0.08
Spools		0.020	0.5	0.001	0.02	0.002	0.05
		0.025	0.6	0.001	0.02	0.002	0.05
		0.030	0.8	0.001	0.02	0.002	0.05
		0.035	0.9	0.001	0.02	0.002	0.05
		0.045	1.1	0.001	0.02	0.002	0.05
		0.052	1.3	0.002	0.05	0.002	0.05
	1/16	0.062	1.6	0.002	0.05	0.002	0.05
	5/64	0.078	2.0	0.002	0.05	0.003	0.08
	3/32	0.094	2.4	0.002	0.05	0.003	0.08
	7/64	0.109	2.8	0.002	0.05	0.003	0.08
	1/8	0.125	3.2	0.002	0.05	0.003	0.08

NOTES:
a. Dimensions, sizes, tolerances, and package forms other than those shown shall be as agreed by purchaser and supplier.
b. Length shall be 36 in. ± 1/2 in. (approximately 900 mm ± 15 mm).

TABLE 10
PACKAGING REQUIREMENTS[a]

Type of Package		Package Size		Net Weight of Electrode[b]	
		in.	mm	lb	kg (approx.)
Coils without Support	As Specified by Purchaser[c]				
Coils with Support (See below)	ID	6-3/4	170	14	6.4
	ID	12	300	25, 30, 50, and 60	11, 14, 23, and 27
Spools[d]	OD	4	100	1-1/2 and 2-1/2	0.7 and 1.1
	OD	8	200	10, 12, and 15	4.5, 5.5, and 6.8
	OD	12	300	25, 30, 35, and 44	11, 14, 16, and 20
	OD	14	360	50 and 60	23 and 27
	OD	22	560	250	110
	OD	24	610	300	140
	OD	30	760	600, 750, and 1000	270, 340, and 454
Drums	OD	15 1/2	400	As Specified by Purchaser[c]	
	OD	20	500		
	OD	23	600	300 and 600	140 and 270
Straight Lengths		36 (long)	900 (long)	10 and 50	4.5 and 22.7

Coils with Support — Standard Dimensions and Weights						
	Coil Net Weight		Inside Diameter of Liner		Width of Wound Electrode	
Electrode Size	lb	kg (approx.)	in.	mm	in. max.	mm, max.
All	14	6.4	6-3/4 ± 1/8	170 ± 3	3	75
	25 and 30	11 and 14	12 ± 1/8	305 ± 3	2-1/2 or 4-5/8	65 or 120
	50, 60, and 65	23, 27, and 30	12 ± 1/8	305 ± 3	4-5/8	120

NOTES:
a. Sizes and net weights other than those specified may be supplied as agreed between supplier and purchaser.
b. Tolerance on net weight shall be ± 10 percent.
c. As agreed between supplier and purchaser.
d. See Figure 6.

(2) rise above the flat surface no more than 1/2 in. (13 mm) at any location.

18.4 The cast and helix of solid filler metal on all other package forms shall be such that a specimen long enough to produce a single loop, when cut from the package and laid unrestrained on a flat surface, will:

(1) form a circle not less than 12 in. (305 mm) for 0.030 in (0.8 mm) and smaller sizes; or not less than 15 in. (380 mm) for 0.035 in. (0.9 mm) and larger sizes, and

(2) rise above the flat surface no more than 1 in. (25 mm) at any location.

Certain bulk packages may contain wire that has been elastically twisted or otherwise mechanically treated in order to provide straighter wire feed. The wire from these packages will not form a circle when cut. Traditional cast and helix measurements may have no relevance. Wire thus treated shall conform to the winding requirements of 18.1 and 18.2. Any method of wire form inspection shall be as agreed between purchaser and supplier.

19. Filler Metal Identification

19.1 The product information and the precautionary information required in Section 21 for marking each package shall also appear on each coil, spool, and drum.

19.2 Coils without support shall have a tag containing this information securely attached to the filler metal at the inside end of the coil.

19.3 Coils with support shall have the information securely affixed in a prominent location on the support.

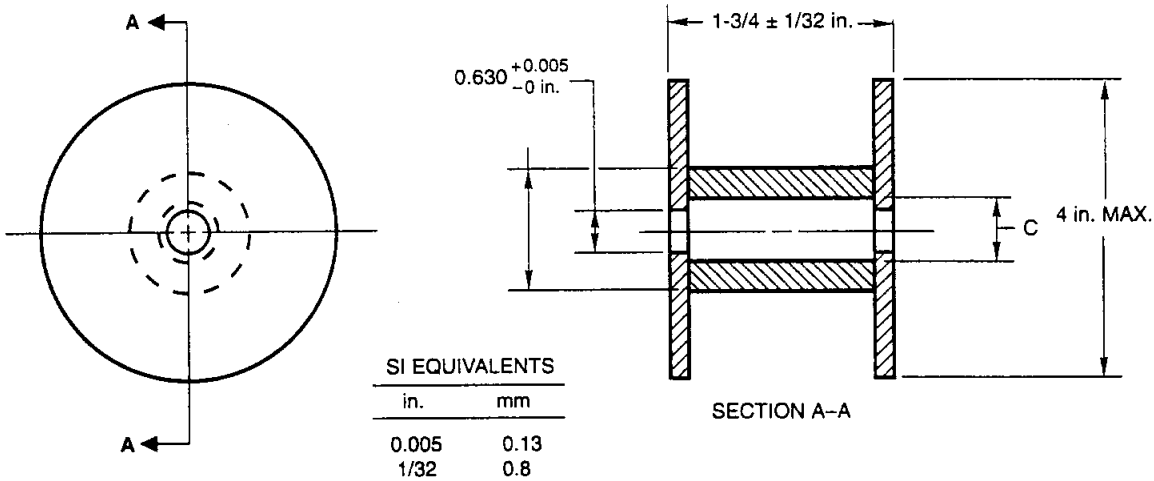

SI EQUIVALENTS

in.	mm
0.005	0.13
1/32	0.8
0.630	16
1-3/4	45
4	102

Notes:
a. Dimension B, outside diameter of barrel, shall be such as to permit proper feeding of the filler metals.
b. Dimension C, inside diameter of barrel, shall be such that swelling of the barrel or misalignment of the barrel and flanges will not result in the inside diameter of the barrel being less than the inside diameter of the flanges.

FIG. 6(a) STANDARD SPOOLS—DIMENSIONS OF 4 in. SPOOLS

19.4 Spools shall have the information securely affixed in a prominent location on the outside of at least one flange of the spool.

19.5 Drums shall have the information securely affixed in a prominent location on the side of the drum.

20. Packaging

Filler metal shall be suitably packaged to ensure against damage during shipment and storage under normal conditions.

21. Marking of Packages

21.1 The following product information (as a minimum) shall be legibly marked so as to be visible from the outside of each unit package:

(1) AWS specification (year of issue may be excluded) and AWS classification numbers, along with any optional supplemental designators, if applicable

(2) Supplier's name and trade designation

(3) Size and net weight

(4) Lot, control, or heat number

21.2 The following precautionary information (as a minimum) shall be prominently displayed in legible print on all packages of electrodes and rods, including individual unit packages enclosed within a larger package:

WARNING:

- Protect yourself and others. Read and understand this information. FUMES AND GASES can be hazardous to your health. ARC RAYS can injure eyes and burn skin. ELECTRIC SHOCK can kill.
- Before use, read and understand the manufacturer's instructions, Material Safety Data Sheets (MSDSs), and your employer's safety practices.
- Keep your head out of the fumes.
- Use enough ventilation, exhaust at the arc, or both, to keep fumes and gases away from your breathing zone and the general area.
- Wear correct eye, ear, and body protection.
- Do not touch live electrical parts.
- See American National Standard Z49.1, *Safety in Welding, Cutting, and Allied Processes,* published by the American Welding Society, 550 N.W. LeJeune Road, Miami, Florida 33126; *OSHA Safety and Health Standards,* 29 CFR 1910, available from the U.S. Government Printing Office, Washington, DC 20402.

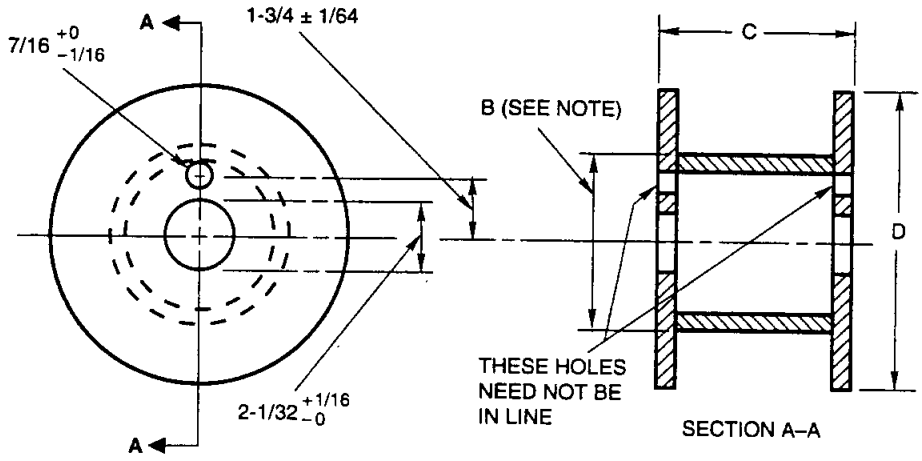

SI EQUIVALENTS	
in.	mm
1/64	0.4
1/32	0.8
1/16	1.6
7/16	11
1-3/4	44
2-1/32	52
2-5/32	55
4	100
8	200
12	300
14	360

Note: Dimension B, outside diameter of barrel, shall be such as to permit proper feeding of the filler metals.

	Dimensions	
Spool Size, in.	C, in.	D, maximum, in.
8	2-5/32 ± 1/32	8
12	4 ± 1/16	12
14	4 ± 1/16	14

FIG. 6(b) STANDARD SPOOLS—DIMENSIONS OF 8, 12, and 14 in. SPOOLS

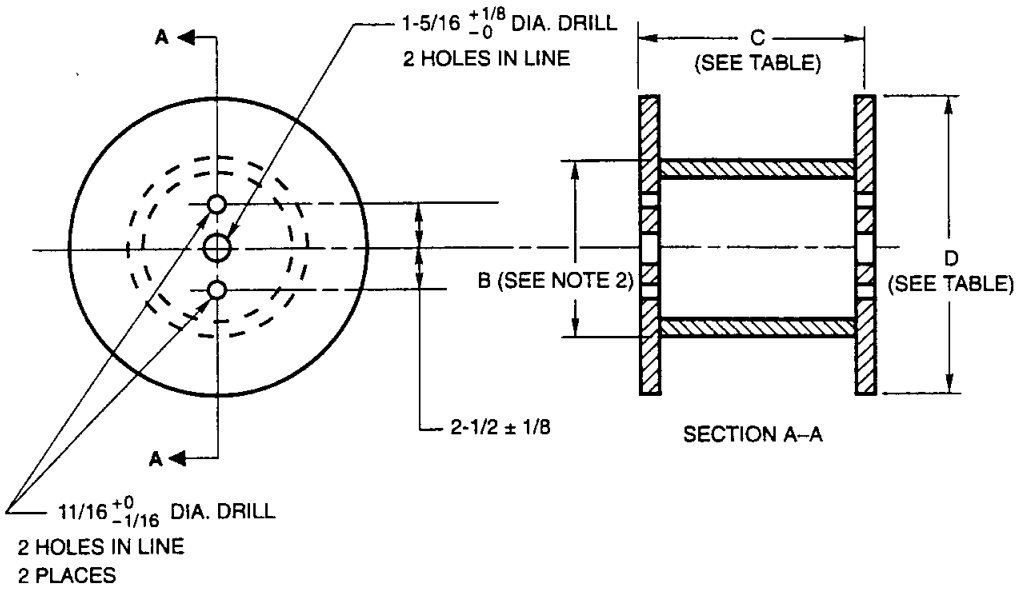

SI EQUIVALENTS

in.	mm
1/16	1.6
1/8	3
1/2	13
11/16	18
1-5/16	33
2-1/2	63
12	305
13-1/2	345
22	560
24	610
30	760

Dimensions		
Spool Size, in.	D, in.	C, maximum, in.
22	22 ± 1/2	12
24	24 ± 1/2	13-1/2
30	30 ± 1/2	13-1/2

Notes:
1. All dimensions are in inches.
2. Dimension B, outside diameter of barrel, shall be such as to permit proper feeding of the electrode.

FIG. 6(c) STANDARD SPOOLS—DIMENSIONS OF 22, 24, and 30 in. SPOOLS

Annex
Guide to AWS Specification for Low-Alloy Steel Electrodes and Rods for Gas Shielded Arc Welding

(This Annex is not a part of ANSI/AWS A5.28-96, *Specification for Low-Alloy Electrodes and Rods for Gas Shielded Arc Welding*, but is included for information only.)

A1. Introduction

The purpose of this guide is to correlate the electrode and rod classifications with their intended applications so the specification can be used effectively. Reference to appropriate base metal specifications is made whenever that can be done and when it would be helpful. Such references are intended only as examples rather than complete listings of the materials for which each filler metal is suitable.

A2. Classification System

A2.1 The system for identifying the electrode classifications in this specification follows the standard pattern used in other AWS filler metal specifications as shown in Fig. A1.

A2.2 The prefix "E" designates an electrode as in other specifications. The letters "ER" indicate that the filler metal may be used either as an electrode or a rod. The digits following (70, 80, 90, 100, 110, or 120) indicate the required minimum tensile strength of the weld metal in multiples of 1000 psi [6.9 MPa]; the minimum tensile strength is determined from a test weld made using the electrode in accordance with the welding conditions in the specification. The letter "S" designates a solid electrode or rod. The letter "C" designates a composite stranded or metal cored electrode. The suffix following the hyphen indicates the chemical composition of the filler metal itself, in the case of solid electrodes and rods, or the weld metal under certain test conditions, in the case of the composite stranded or metal cored electrodes.

An optional supplemental diffusible hydrogen designator (H16, H8, H4, or H2) may follow, indicating whether the electrode will meet a maximum diffusible hydrogen level of 16, 8, 4, or 2 ml/100 g of weld metal when tested as outlined in this specification.

A2.3 "G" Classification and the Use of "Not Specified" and "Not Required"

A2.3.1 This specification includes filler metals classified as ERXXS-G, and EXXC-G. The "G" indicates that the filler metal is of a general classification. It is "general" because not all of the particular requirements specified for each of the other classifications are specified for this classification. The intent in establishing these classifications is to provide a means by which filler metals that differ in one respect or another (chemical composition, for example) from all other classifications (meaning that the composition of the filler metal, in the case of the example, does not meet the composition specified for any of the classifications in the specification) can still be classified according to the specification. The purpose is to allow a useful filler metal, one that otherwise would have to await a revision of the specification, to be classified immediately under the existing specification. This means, then, that two filler metals, each bearing the same "G" classification, may be quite different in some particular respect (chemical composition, again, for example).

A2.3.2 The point of difference (although not necessarily the amount of the difference) referred to above will be readily apparent from the use of the words "not required" and "not specified" in the specification. The use of these words is as follows:

Not Specified is used in those areas of the specification that refer to the results of some particular test. It indicates that the requirements for that test are not specified for that particular classification.

Not Required is used in those areas of the specification that refer to the tests that must be conducted in order

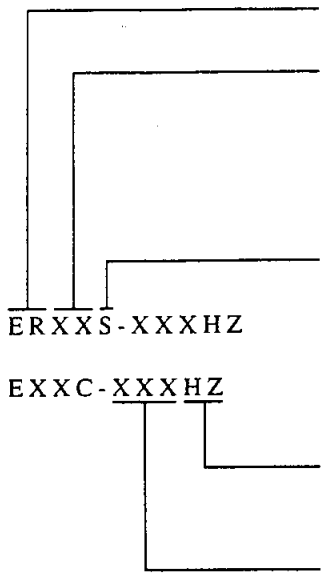

Indicates use as both an electrode or rod (ER), or use only as an electrode (E).

Indicates, in 1000 psi (6.9 MPa) increments, the minimum tensile strength of the weld metal produced by the electrode when tested according to this specification. Three digits are used for weld metal of 100 000 psi (690 MPa) tensile strength and higher (see Table 3). (Note that in this specification the digits "70" may represent 75 000 psi (515 MPa) rather than 70 000 psi (480 MPa) (see Table 3).

Indicates whether the filler metal is solid (S) or composite stranded or metal cored (C).

(for solid wire)

(for composite wire)

Optional supplemental diffusible hydrogen designator (see Table 8), where Z represents 16, 8, 4, or 2.

Indicates the chemical composition of a solid electrode or the chemical composition of the weld metal produced by a composite stranded or metal cored electrode (see Tables 1 and 2).

FIG. A1 CLASSIFICATION SYSTEM

to classify a filler metal. It indicates that the test is not required because the requirements (results) for the test have not been specified for that particular classification. Restating the case, when a requirement is not specified, it is not necessary to conduct the corresponding test in order to classify a filler metal to that classification. When a purchaser wants the information provided by that test, in order to consider a particular product of that classification for a certain application, the purchaser will have to arrange for that information with the supplier of the product. The purchaser will have to establish with that supplier just what the testing procedures and the acceptance requirements are to be for that test. The purchaser may want to incorporate that information (via ANSI/AWS A5.01, *Filler Metal Procurement Guidelines*) into the purchase order.

A2.3.3 Request for Filler Metal Classification

A2.3.3.1 When a filler metal cannot be classified according to some classification other than a "G" classification, the manufacturer may request that a classification be established for that filler metal. The manufacturer may do this by following the procedure given here. When the manufacturer elects to use the "G" classification, the Filler Metal Committee recommends that the manufacturer still request that a classification be established for that filler metal, as long as the filler metal is of commercial significance.

A2.3.3.2 A request to establish a new filler metal classification shall be a written request, and it needs to provide sufficient detail to permit the Filler Metal Committee or the Subcommittee to determine whether a new classification or the modification of an existing classification is more appropriate, and whether either is necessary to satisfy the need. The request shall state the variables and their limits for such a classification or modification. The request should contain some indication of the time by which completion of the new classification or modification is needed.

A2.3.3.3 The request should be sent to the Secretary of the Filler Metal Committee at AWS Headquarters. Upon receipt of the request, the Secretary will execute the following:

(1) Assign an identifying number to the request. This number shall include the date the request was received.

(2) Confirm receipt of the request and give the identification number to the person who made the request.

(3) Send a copy of the request to the Chairman of the Filler Metal Committee and to the Chairman of the particular Subcommittee involved.

(4) File the original request.

(5) Add the request to the log of outstanding requests.

A2.3.3.4 All necessary action on each request will be completed as soon as possible. If more than 12 months lapse, the Secretary shall inform the requestor of the status of the request, with copies to the Chairman of the Committee and the Subcommittee. Requests still outstanding after 18 months shall be considered not to have been answered in a "timely manner" and the Secretary shall report these to the Chairman of the Filler Metal Committee, for action.

A2.3.3.5 The Secretary shall include a copy of the log of all requests pending and those completed during the preceding year with the agenda for each Filler Metal Committee meeting. Any other publication of requests that have been completed will be at the option of the American Welding Society, as deemed appropriate.

A3. Acceptance

Acceptance of all welding materials classified under this specification is in accordance with ANSI/AWS A5.01 *Filler Metal Procurement Guidelines,* as the specification states. Any testing a purchaser requires of the supplier, for material shipped in accordance with this specification, shall be clearly stated in the purchase order, according to the provisions of ANSI/AWS A5.01 *Filler Metal Procurement Guidelines.* In the absence of any such statement in the purchase order, the supplier may ship the material with whatever testing the supplier normally conducts on material of that classification, as specified in Schedule F, Table 1, of ANSI/AWS A5.01 *Filler Metal Procurement Guidelines.* Testing in accordance with any other Schedule in that Table must be specifically required by the purchase order. In such cases, acceptance of the material shipped will be in accordance with those requirements.

A4. Certification

A4.1 The act of placing the AWS specification and classification designations on the packaging enclosing the product, or the classification on the product itself, constitutes the supplier's (manufacturer's) certification that the product meets all of the requirements of the specification.

The only testing requirement implicit in the certification is that the manufacturer has actually conducted the tests required by the specification on material that is representative of that being shipped, and that the material met the requirements of the specification.

Representative material, in this case, is any production run of that classification using the same formulation. "Certification" is not to be construed to mean that tests of any kind were necessarily conducted on samples of the specific material shipped. Tests on such material may or may not have been made. The basis for the certification required by the specification is the classification test of "representative material" cited above, and the "Manufacturer's Quality Assurance System" in ANSI/AWS A5.01 *Filler Metal Procurement Guidelines.*

A4.2 (Optional) At the option and expense of the purchaser, acceptance may be based on the results of any or all of the tests required by this specification made on the gas tungsten arc welding (GTAW) test assembly described in Fig. A2, with tension specimen as described in Fig. A3 (and the impact specimen described in Fig. 5). Solid electrodes are generally recommended for GTAW and PAW.

A5. Ventilation During Welding

A5.1 Five major factors govern the quantity of fumes in the atmosphere to which welders and welding operators are exposed during welding:

(1) Dimensions of the space in which welding is done (with special regard to the height of the ceiling)

(2) Number of welders and welding operators working in that space

(3) Rate of evolution of fumes, gases, or dust, according to the materials and processes used

(4) The proximity of the welders or welding operators to the fumes as the fumes issue from the welding zone, and to the gases and dusts in the space in which they are working

(5) The ventilation provided to the space in which the welding is done

A5.2 American National Standard Z49.1, *Safety in Welding, Cutting, and Allied Processes* (published by the American Welding Society), discusses the ventilation that is required during welding and should be referred to for details. Attention is particularly drawn to the section entitled "Health Protection and Ventilation."

A6. Welding Considerations

A6.1 Gas metal arc welding (GTAW) can be divided into four categories based on the mode of metal transfer: (1) spray, (2) pulsed spray, (3) globular, and (4) short

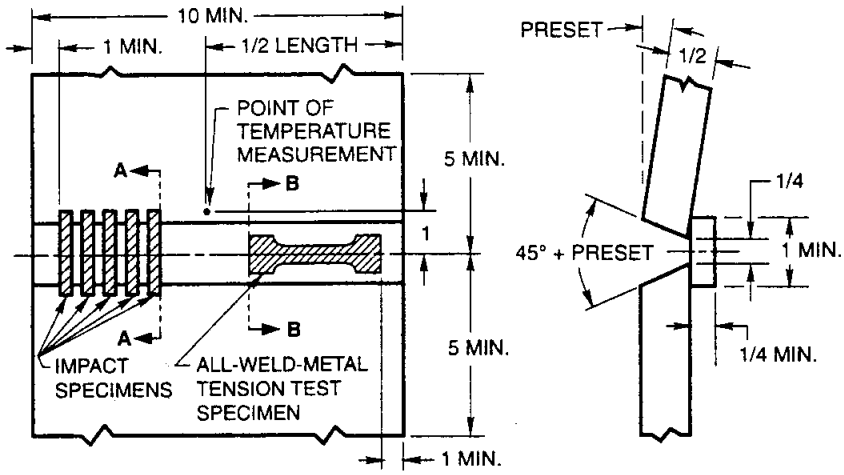

(A) TEST PLATE SHOWING LOCATION OF TEST SPECIMENS

SI EQUIVALENTS

in.	mm
1/8	3.2
1/4	6.4
1/2	12.7
1	25
5	125
10	250

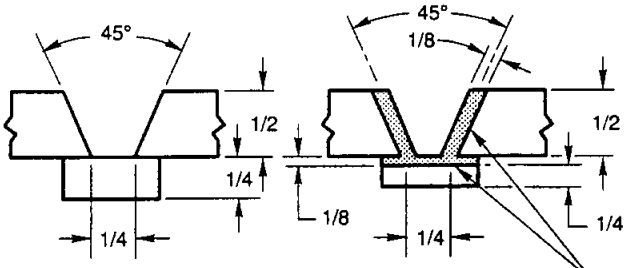

STANDARD TEST PLATE

BUTTERED TEST PLATE
(See footnote "a" of Table 6)

(B) GROOVE PREPARATION OF TEST PLATE

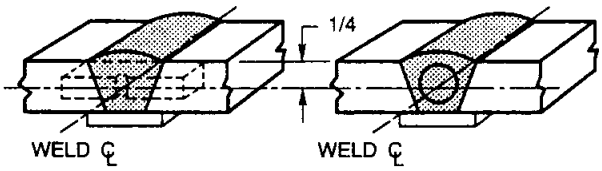

SECTION A–A

SECTION B–B

(C) ORIENTATION OF IMPACT SPECIMEN

(D) LOCATION OF ALL-WELD-METAL TENSION SPECIMEN

	Test Conditions	
Standard Size	3/32 in. (2.4 mm)	1/8 in. (3.2 mm)
Shielding Gas	Argon	Argon
Travel Speed	4 to 6 in./min (0.17 to 0.25 mm/sec)	4 to 6 in./min (0.17 to 0.25 mm/sec)
Nominal Arc Voltage	13 to 16 V	16 to 19 V
Nominal Current, DCEN (DCEN = electrode negative)	220 to 250 A	250 to 280 A
Preheat and Interpass Temperature	See Table 7	See Table 7

Notes:
a. All dimensions (excluding angles) are in inches.
b. Prior to welding, the assembly may be preset as shown so that the welded joint will be sufficiently flat to facilitate test specimen removal. As an alternative, restraint or a combination of restraint and preset may be used.
c. When required, edges of the grooves and the contacting face of the backing shall be buttered as shown. Any size of the electrode or rod being tested may be used for buttering. See Table 6, Note (a).
d. If sizes other than those shown above are used, nominal current and arc voltage shall be changed as needed.
e. Postweld heat treatment shall be as specified in Table 7 for the classification under test.

FIG. A2 OPTIONAL GTAW GROOVE WELD TEST ASSEMBLY FOR MECHANICAL PROPERTIES AND SOUNDNESS

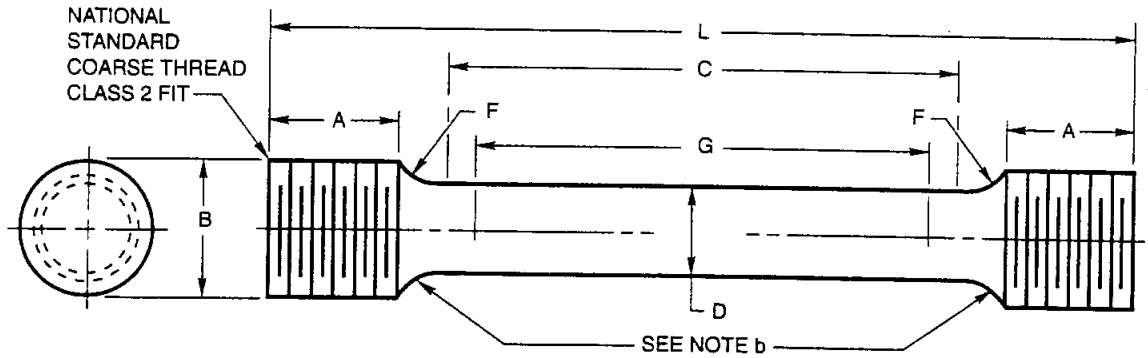

Dimensions of Specimen, in.				
D	G	C	B	F, min.
0.350 ± 0.007	1.400 ± 0.005	1-3/4	1/2	0.25
Dimensions of Specimen, mm				
D	G	C	B	F, min.
8.90 ± 0.1	35.5 ± 0.1	44	12.7	6.4

Notes:
a. Dimensions G and C shall be as shown, but ends may be of any shape to fit the testing machine holders as long as the load is axial.
b. The diameter of the specimen within the gage length shall be slightly smaller at the center than at the ends. The difference shall not exceed one percent of the diameter.
c. When the extensometer is required to determine yield strength, dimension C may be increased. However, the percent of the elongation shall be based on dimension G.
d. The surface finish within the C dimension shall be no rougher than 63 μin. (1.6 μm).

FIG. A3 OPTIONAL TENSION TEST SPECIMEN FOR GAS TUNGSTEN ARC WELDING

circuiting transfer. In the spray, pulsed spray, and globular modes, transfer occurs as distinct droplets that are detached from the electrode, transferring along the arc column into the weld pool. In the short circuiting mode, the metal is deposited during frequent short circuiting of the electrode in the molten pool.

A6.2 Spray Transfer

A6.2.1 The spray transfer mode, for low-alloy steel, is most commonly obtained with argon shielding gas mixtures with up to 5 percent oxygen or carbon dioxide. A characteristic of these shielding gas mixtures is the smooth arc plasma through which hundreds of very fine droplets are transferred to the weld pool each second.

A6.2.2 Spray transfer with argon-oxygen or argon-carbon dioxide shielding gas is, primarily, a function of current density, polarity, and resistance heating of the electrode. The high droplet rate (approximately 250 droplets per second) develops suddenly above a critical current level, commonly referred to as the *transition current* (for each size electrode). Below this current, the metal is transferred in drops generally larger in diameter than the electrode at a rate of from 10 to 20 per second (globular transfer). The transition current is also dependent, to some extent, on the chemical composition of the electrode. For $\frac{1}{16}$ in. (1.6 mm) diameter low-alloy steel electrodes, a transition current of 270 amperes (direct current electrode positive [DCEP]) is common. Alternating current is not recommended for this type of welding because it does not produce a stable arc.

A6.2.3 Pulsed Spray Transfer. Metal transfer in pulsed spray welding is similar to that of the spray transfer described above, but it occurs at a lower average current. The lower average current is made possible by rapid pulsing of the welding current between a high level, where metal will transfer rapidly in the spray mode, and a low level, where no transfer will take place. At a typical rate of 60 to 120 pulses per second, a melted drop is formed by the low-current arc, which is then "squeezed off" by the high-current pulse. This permits all-position welding.

A6.3 Globular Transfer. The mode of transfer that characterizes 100 percent CO_2 as a shielding gas is globular. Common practice with globular transfer is to use low arc voltage to minimize spatter. This buries the arc and produces deep penetration. Electrodes of 0.045 and $\frac{1}{16}$ in. (1.1 and 1.6 mm) diameter normally are used at welding currents in the range of 275–400 amperes (DCEP), for this type of transfer. The rate at which droplets (globules) are transferred ranges from 20 to 70 per second, depending on the size of the electrode, the amperage, polarity, and arc voltage.

A6.4 Short Circuiting Transfer. This mode of transfer is obtained with small diameter electrodes (0.030 to 0.045 in. [0.8 to 1.1 mm]) using low arc voltages and amperages, and a power source designed for short circuiting transfer. The electrode short-circuits to the weld metal, usually at a rate of from 50 to 200 times per second. Metal is transferred with each short circuit, but not across the arc. Short circuiting gas metal arc welding of low-alloy steel is done most commonly with mixtures of argon and CO_2 as the shielding gas, with CO_2 alone, and occasionally with mixtures of helium-argon-CO_2. Penetration of welds made with CO_2 shielding gas is greater than with argon-CO_2 mixtures, but mixtures containing substantial amounts of argon or helium generally result in superior weld metal impact properties. Shielding gas mixtures of 50 to 90 percent argon-remainder CO_2 or 50 to 90 percent helium-remainder CO_2 result in higher short circuiting rates and lower minimum currents and voltages than does CO_2 shielding alone. This can be an advantage when welding thin plate or in the achievement of superior impact properties.

A7. Description and Intended Use of Electrodes and Rods

A7.1 The following is a description of the characteristics and intended use of the filler metals classified by this specification. The designations and the chemical composition requirements for all classifications are given in Tables 1 and 2 of this specification. The mechanical properties of weld metals from filler metals of the various classifications will conform to the minimum requirements stated in Tables 3 and 4 of the specification.

A7.2 It should be noted that weld properties may vary appreciably depending on filler metal size and current used, plate thickness, joint geometry, preheat and interpass temperatures, surface conditions, base-metal composition and extent of alloying with the filler metal, and shielding gas. For example, when filler metals having an analysis within the range of Table 1 are deposited, the weld metal chemical composition will not vary greatly from the as-manufactured composition of the filler metal when used with argon-oxygen shielding gas. However, they will show a considerable reduction in the content of manganese, silicon, and other deoxidizers when used with CO_2 as the shielding gas.

A7.3 ER70S-A1 Classification ($\frac{1}{2}$ Mo). Filler metal of this classification is similar to many of the carbon steel filler metals classified in ANSI/AWS A5.18, except that $\frac{1}{2}$ percent molybdenum has been added. This addition increases the strength of the weld metal, especially at elevated temperatures, and provides some increase in corrosion resistance; however, it will likely reduce the notch toughness of the weld metal. Typical applications include the welding of C-Mo base metals such as ASTM 204 plate and A335-P1 pipe.

A7.4 ER80S-B2 and E80C-B2 Classifications (1-$\frac{1}{4}$ Cr-$\frac{1}{2}$ Mo). Filler metals of these classifications are used to weld $\frac{1}{2}$Cr-$\frac{1}{2}$Mo, 1Cr-$\frac{1}{2}$Mo, and 1-$\frac{1}{4}$Cr-$\frac{1}{2}$Mo steels for elevated temperatures and corrosive service. They are also used for joining dissimilar combinations of Cr-Mo and carbon steels. All transfer modes of the GMAW process may be used. Careful control of preheat, interpass temperatures, and postheat is essential to avoid cracking. These electrodes are classified after postweld heat treatment. Special care must be used when using them in the as-welded condition due to higher strength levels.

A7.5 ER70S-B2L and E70C-B2L Classifications (1-$\frac{1}{4}$ Cr-$\frac{1}{2}$ Mo). These filler metals are identical to the types ER80S-B2 and E80C-B2 except for the low-carbon content (0.05 percent maximum) and thus the lower strength levels. This alloy exhibits greater resistance to cracking and is more suitable for welds to be left in the as-welded condition or when the accuracy of the postweld heat treatment operation is questionable. These classifications were previously ER80S-B2L and E80C-B2L in the previous edition of this specification. The strength requirements and classification designator have been changed to reflect the true strength capabilities of the chemical composition.

A7.6 ER90S-B3 and E90C-B3 Classifications (2-$\frac{1}{4}$ Cr-1 Mo). Filler metals of these classifications are used to weld the 2-$\frac{1}{4}$Cr-1Mo steels used for high-temperature/high-pressure piping and pressure vessels. These may also be used for joining combinations of Cr-Mo and carbon steel. All GMAW modes may be used. Careful control of preheat, interpass temperatures, and postweld heat treatment is essential to avoid cracking. These electrodes are classified after postweld heat

treatment. Special care must be used when using them in the as-welded condition due to higher strength levels.

A7.7 ER80S-B3L and E80C-B3L Classifications (2-¼ Cr-1 Mo). These filler metals are identical to the types ER90S-B3 and E90C-B3 except for the low-carbon content (0.05 percent maximum) and, therefore, the lower strength levels. These alloys exhibit greater resistance to cracking and are more suitable for welds to be left in the as-welded condition. These classifications were previously ER90S-B3L and E90C-B3L in the previous edition of this specification. The strength requirements and classification designator have been changed to reflect the true strength capabilities of the chemical composition.

A7.8 ER80S-Ni1 and E80C-Ni1 Classifications (1.0 Ni). These filler metals deposit weld metal similar to E8018-C3 covered electrodes, and are used for welding low-alloy high-strength steels requiring good toughness at temperatures as low as −50°F (−46°C).

A7.9 ER80S-Ni2, E70C-Ni2, and E80C-Ni2 Classifications (2-¼ Ni). These filler metals deposit weld metal similar to E8018-C1 electrodes. Typically, they are used for welding 2-½ percent nickel steels and other materials requiring good toughness at temperatures as low as −80°F (−62°C).

A7.10 ER80S-Ni3 and E80C-Ni3 Classifications (3-¼ Ni). These filler metals deposit weld metal similar to E8018-C2 electrodes. Typically they are used for welding 3-½ percent nickel steels for low-temperature service.

A7.11 ER80S-D2, ER90S-D2, and E90C-D2 Classifications (½ Mo). The ER80S-D2 and ER90S-D2 classifications have the same chemical requirements as the E70S-1B classification of AWS A5.18-69. The differences between the ER80S-D2 and the ER90S-D2 classifications are the change in shielding gas and the mechanical property requirements specified in Table 3. Filler metals of these classifications contain molybdenum for increased strength and a high level of deoxidizers (Mn and Si) to control porosity when welding with CO_2 as the shielding gas. They will give radiographic quality welds with excellent bead appearance in both ordinary and difficult-to-weld carbon and low-alloy steels. They exhibit excellent out-of-position welding characteristics with the short circuiting and pulsed arc processes. The combination of weld soundness and strength makes filler metals of these classifications suitable for single and multiple-pass welding of a variety of carbon and low-alloy, higher strength steels in both the as-welded and postweld heat-treated conditions. The chemical composition of these classifications differs from those of the "-D2" type electrodes in AWS A5.5.

A7.12 ER100S-1, ER110S-1, and ER120S-1 Classifications. These filler metals deposit high-strength, very tough weld metal for critical applications. Originally developed for welding HY80 and HY100 steels for military applications, they are also used for a variety of structural applications where tensile strength requirements exceed 100 ksi (690 MPa), and excellent toughness is required to temperatures as low as −60°F (−51°C). Mechanical properties obtained from weld deposits made with electrodes of these classifications will vary depending on the heat input used.

A7.13 ER80S-B6 Classification (5 Cr-½ Mo). This classification contains 4.0 to 6.0 percent chromium and about 0.50 percent molybdenum. It is used for welding material of similar composition, usually in the form of pipe or tubing. The alloy is an air-hardening material and, therefore, when welding with this filler metal, preheat and postweld heat treatment are required. This electrode is similar to that previously classified as ER502 in A5.9-81.

A7.14 ER80S-B8 Classification (9 Cr-1 Mo). This classification contains 8.0 to 10.5 percent chromium and about 1.0 percent molybdenum. Filler metal of this classification is used for welding base metal of similar compositions, usually in the form of pipe or tubing. The alloy is an air-hardening material and, therefore, when welding with this filler metal, preheating and postweld heat treatment are required. This electrode is similar to that previously classified as ER505 in A5.9-81.

A7.15 ER90S-B9 Classification [9 Cr-1 Mo-0.2V-0.07Nb(Cb)]. ER90S-B9 is a 9Cr-1Mo solid wire modified with niobium (columbium) and vanadium designed to provide strength, toughness, fatigue life, oxidation resistance and corrosion resistance at elevated temperatures. Due to the higher elevated temperature properties of this alloy, components that are now fabricated from stainless and ferritic steels may be fabricated from a single alloy, eliminating problems associated with dissimilar welds.

In addition to the classification requirements in this specification, either impact toughness or high-temperature creep strength properties should be determined. Due to the influence of various levels of carbon and niobium (columbium), specific values and testing must be agreed to by the supplier and purchaser.

A7.16 ERXXS-G and EXXC-G Classifications. Electrodes and rods of the ERXXS-G and electrodes of the EXXC-G classifications are those filler metals

not included in the preceding classes and for which only certain mechanical property requirements are specified. The electrodes are intended for single and multiple-pass applications. The filler metal supplier should be consulted for the composition, properties, characteristics, and intended use of these classifications (see A2.3 for further information).

A8. Special Tests

A8.1 It is recognized that supplementary tests may be required to determine suitability of these filler metals for certain applications involving properties not considered in this specification. In such cases, additional tests to determine specific properties of the weld metal, such as hardness, corrosion resistance, mechanical properties at higher or lower service temperatures, may be required. Those tests may be conducted as agreed between supplier and purchaser. ANSI/AWS A5.01 contains provisions for ordering such tests.

A8.2 Diffusible Hydrogen. Solid, composite stranded, and composite metal cored GMAW electrodes are generally considered to be low hydrogen consumables. When joining carbon steels containing 0.30 percent or less carbon, hydrogen-assisted cracking is unlikely to be of concern. However, when joining high-strength, low-alloy steel, weld metal or heat-affected-zone cracking associated with diffusible hydrogen tends to become more of a problem. Crack susceptibility increases as does the alloy content, weld metal strength, heat-affected-zone hardness, and diffusible hydrogen content. Susceptibility to hydrogen cracking is also greater when the preheat and interpass temperatures are decreased, or the time at or above the interpass temperature is shortened during welding. The appearance of hydrogen cracking is usually delayed some hours after cooling. It may appear as transverse weld cracks, longitudinal cracks (especially in root beads), and toe or underbead cracks in the heat-affected zone.

Since the available diffusible hydrogen level strongly influences the tendency towards hydrogen-assisted cracking, it may be desirable to measure the diffusible hydrogen content resulting from a particular electrode. Accordingly, the use of optional supplemental designators for diffusible hydrogen is introduced to indicate the maximum average value obtained under a clearly defined test condition in ANSI/AWS A4.3, *Standard Methods for Determination of the Diffusible Hydrogen Content of Martensitic, Bainitic, and Ferritic Steel Weld Metal Produced by Arc Welding.* Electrodes that are designated as meeting the lower or lowest hydrogen limits, as specified in Table 8, are also understood to be able to meet any higher electrode hydrogen limits, even though these are not necessarily designated along with the electrode classification. Therefore, as an example, an electrode being designated as "H4" also meets "H8" requirements without being designated as such.

The user of this information is cautioned that actual fabrication conditions may result in different diffusible hydrogen values than those indicated by the designator.

The use of a reference atmospheric condition during welding is necessary because the arc always is imperfectly shielded. Moisture from the air, distinct from that in the electrode or gas, can enter the arc and subsequently the weld pool, contributing to the resulting observed diffusible hydrogen. This effect can be minimized by maintaining a suitable gas-flow rate and as short an arc length as possible, consistent with a steady arc. At times, some air will mix with the gas and add its moisture to the other sources of diffusible hydrogen. It is possible for this extra diffusible hydrogen to significantly affect the outcome of a diffusible hydrogen test. For this reason, it is appropriate to specify a reference atmospheric condition. The reference atmospheric condition of 10 grains of moisture per pound (1.43 grams per kilogram) of dry air is equivalent to 10 percent relative humidity at 70°F (21°C) at 29.92 in. Hg (760 mm) barometric pressure. Actual conditions, measured using a calibrated psychrometer that equal or exceed this reference condition, provide assurance that the conditions during welding will not diminish the final results of the test.

A8.3 Aging of Tensile Specimens. Weld metals may contain significant quantities of hydrogen for some time after they have been made. Most of this hydrogen gradually escapes over time. This may take several weeks at room temperature or several hours at elevated temperatures. As a result of this eventual change in hydrogen level, ductility of the weld metal increases towards its inherent value, while yield, tensile, and impact strengths remain relatively unchanged. This specification permits the aging of the tensile test specimens at elevated temperatures up to 220°F (104 °C) for up to 48 hours before subjecting them to tension testing. The purpose of this treatment is to facilitate removal of hydrogen from the test specimen in order to minimize discrepancies in testing.

Aging treatments are sometimes used for low-hydrogen electrode deposits, especially when testing high-strength deposits. Note that aging may involve holding test specimens at room temperature for several days or holding at a higher temperature for a shorter period of time. Consequently, users are cautioned to employ

adequate preheat and interpass temperatures to avoid the deleterious effects of hydrogen in production welds.

A9. Discontinued Classifications

The following classifications have been discontinued over the life of this specification:

Discontinues Classification	Published	Replaced With
ER100S-2	1979	—
ER80S-B2L	1979	ER70S-B2L
E80C-BL2	1979	E70C-B2L
ER90S-B3L	1979	ER80S-B3L
E90C-B3L	1979	E80C-B3L

A10. General Safety Considerations

A10.1 Burn Protection. Molten metal, sparks, slag, and hot-work surfaces are produced by welding, cutting, and allied processes. These can cause burns if precautionary measures are not used. Workers should wear protective clothing made of fire-resistant material. Pant cuffs, open pockets, or other places on clothing that can catch and retain molten metal or sparks should not be worn. High-top shoes or leather leggings and fire-resistant gloves should be worn. Pant legs should be worn over the outside of high-top shoes. Helmets or hand shields that provide protection for the face, neck, and ears, and a head covering to protect the head should be used. In addition, appropriate eye protection should be used.

When welding overhead or in confined spaces, ear plugs to prevent weld spatter from entering the ear canal should be worn in combination with goggles or equivalent to give added eye protection. Clothing should be kept free of grease and oil. Combustible materials should not be carried in pockets. If any combustible substance has been spilled on clothing, a change to clean, fire resistant clothing should be made before working with open arcs or flame. Aprons, cape-sleeves, leggings, and shoulder covers with bibs designed for welding service should be used.

Where welding or cutting of unusually thick base metal is involved, sheet metal shields should be used for extra protection. Mechanization of highly hazardous processes or jobs should be considered. Other personnel in the work area should be protected by the use of noncombustible screens or by the use of appropriate protection as described in the previous paragraph.

Before leaving a work area, hot workpieces should be marked to alert other persons of this hazard. No attempt should be made to repair or disconnect electrical equipment when it is under load.

Disconnection under load produces arcing of the contacts and may cause burns or shock, or both.

Note: Burns can be caused by touching hot equipment such as electrode holders, tips, and nozzles. Therefore, insulated gloves should be worn when these items are handled, unless an adequate cooling period has been allowed before touching.

The following sources are for more detailed information on personal protection:

(1) American National Standards Institute. ANSI Z41.1, *Safety-Toe Footwear.* New York: American National Standards Institute.[6]

(2) —. ANSI Z49.1, *Safety in Welding, Cutting, and Allied Processes.* Miami, FL: American Welding Society.

(3) —. ANSI Z87.1, *Practice for Occupational and Educational Eye and Face Protection.* New York: American National Standards Institute.

(4) Occupational Safety and Health Administration. *Code of Federal Regulations,* Title 29 Labor, Chapter XVII, Part 1910. Washington, D.C.: U.S. Government Printing Office.[7]

A10.2 Electrical Hazards. Electric shock can kill; however, it can be avoided. Live electrical parts should not be touched. The manufacturer's instructions and recommended safe practices should be read and understood. Faulty installation, improper grounding, and incorrect operation and maintenance of electrical equipment are all sources of danger.

All electrical equipment and the workpieces should be grounded. The workpiece lead is not a ground lead. It is used only to complete the welding circuit. A separate connection is required to ground the workpiece. The workpiece should not be mistaken for a ground connection.

The correct cable size should be used, since sustained overloading will cause cable failure and result in possible electrical shock or fire hazard. All electrical connections should be tight, clean, and dry. Poor connections can overheat and even melt. Further, they can produce dangerous arcs and sparks. Water, grease, or dirt should not be allowed to accumulate on plugs, sockets, or electrical units. Moisture can conduct electricity.

To prevent shock, the work area, equipment, and clothing should be kept dry at all times. Welders should wear dry gloves and rubber-soled shoes, or stand on a dry board or insulated platform. Cables and connections should be kept in good condition. Improper or worn

[6] ANSI documents are available from the American National Standards Institute, 11 West 42 Street, New York, NY 10036

[7] OSHA documents are available from U.S. Government Printing Office, Washington, D.C. 20402

electrical connections may create conditions that could cause electrical shock or short circuits. Worn, damaged, or bare cables should not be used. Open-circuit voltage should be avoided. When several welders are working with arcs of different polarities, or when a number of alternating current machines are being used, the open-circuit voltages can be additive. The added voltages increase the severity of the shock hazard.

In case of electric shock, the power should be turned off. If the rescuer must resort to pulling the victim from the live contact, nonconducting materials should be used. If the victim is not breathing, cardiopulmonary resuscitation (CPR) should be administered as soon as contact with the electrical source is broken. A physician should be called and CPR continued until breathing has been restored, or until a physician has arrived. Electrical burns are treated as thermal burns; that is, clean, cold (iced) compresses should be applied. Contamination should be avoided; the area should be covered with a clean, dry dressing; and the patient should be transported to medical assistance.

Recognized safety standards such as ANSI/ASC Z49.1, *Safety in Welding, Cutting, and Allied Processes,* and NFPA No. 70, *National Electrical Code,* should be followed.[8]

A10.3 Fumes and Gases. Many welding, cutting, and allied processes produce fumes and gases which may be harmful to health. Fumes are solid particles which originate from welding filler metals and fluxes, the base metal, and any coatings present on the base metal. Gases are produced during the welding process or may be produced by the effects of process radiation on the surrounding environment. Management personnel and welders alike should be aware of the effects of these fumes and gases. The amount and composition of these fumes and gases depend upon the composition of the filler metal and base metal, welding process, current level, arc length, and other factors.

The possible effects of over-exposure range from irritation of eyes, skin, and respiratory system to more severe complications. Effects may occur immediately or at some later time. Fumes can cause symptoms such as nausea, headaches, dizziness, and metal fume fever. The possibility of more serious health effects exists when especially toxic materials are involved. In confined spaces, the shielding gases and fumes might displace breathing air and cause asphyxiation. One's head should always be kept out of the fumes. Sufficient ventilation, exhaust at the arc, or both, should be used to keep fumes and gases from your breathing zone and the general area.

In some cases, natural air movement will provide enough ventilation. Where ventilation may be questionable, air sampling should be used to determine if corrective measures should be applied.

More detailed information on fumes and gases produced by the various welding processes may be found in the following:

(1) The permissible exposure limits required by OSHA can be found in *Code of Federal Regulations,* Title 29, Chapter XVII, Part 1910.

(2) The recommended threshold limit values for fumes and gases may be found in *Threshold Limit Values for Chemical Substances and Physical Agents in the Workroom Environment,* published by the American Conference of Governmental Industrial Hygienists (ACGIH).[9]

(3) The results of an AWS-funded study are available in a report entitled, *Fumes and Gases in the Welding Environment,* available from the American Welding Society.

(4) Manufacturer's Material Safety Data Sheet for the product.

A10.4 Radiation. Welding, cutting, and allied operations may produce radiant energy (radiation) harmful to health. One should become acquainted with the effects of this radiant energy.

Radiant energy may be ionizing (such as x-rays), or nonionizing (such as ultraviolet, visible light, or infrared). Radiation can produce a variety of effects such as skin burns and eye damage, depending on the radiant energy's wavelength and intensity, if excessive exposure occurs.

A10.4.1 Ionizing Radiation. Ionizing radiation is produced by the electron beam welding process. It is ordinarily controlled within acceptance limits by use of suitable shielding enclosing the welding area.

A10.4.2 Nonionizing Radiation. The intensity and wavelengths of nonionizing radiant energy produced depend on many factors, such as the process, welding parameters, electrode and base-metal composition, fluxes, and any coating or plating on the base metal. Some processes such as resistance welding and cold pressure welding ordinarily produce negligible quantities of radiant energy. However, most arc welding and cutting processes (except submerged arc when used

[8] NFPA documents are available form the National Fire Protection Association, 1 Batterymarch Park, Quincy, MA 02269.

[9] ACGIH documents are available form the American Conference of Governmental Industrial Hygienists, Kemper Woods Center, 1330 Kemper Meadow Drive, Cincinnati, OH 45240.

properly), laser welding and torch welding, cutting, brazing, or soldering can produce quantities of nonionizing radiation such that precautionary measures are necessary.

Protection from possible harmful effects caused by nonionizing radiant energy from welding include the following measures:

(1) One should not look at welding arcs except through welding filter plates which meet the requirements of ANSI Z87.1, *Practice for Occupational and Educational Eye and Face Protection,* published by American National Standards Institute. It should be noted that transparent welding curtains are not intended as welding filter plates, but rather are intended to protect a passerby from incidental exposure.

(2) Exposed skin should be protected with adequate gloves and clothing as specified in ANSI Z49.1, *Safety in Welding, Cutting, and Allied Processes,* published by American Welding Society.

(3) Reflections from welding arcs should be avoided, and all personnel should be protected from intense reflections. (*Note: Paints using pigments of substantially zinc oxide or titanium dioxide have a lower reflectance for ultraviolet radiation.*

(4) Screens, curtains, or adequate distance from aisles, walkways, etc., should be used to avoid exposing passersby to welding operations.

(5) Safety glasses with UV protective side shields have been shown to provide some beneficial protection from ultraviolet radiation produced by welding arcs.

A10.4.3 Ionizing radiation information sources include the following:

(1) AWS F2.1, *Recommended Safe Practices for Electron Beam Welding and Cutting,* available from the American Welding Society.

(2) Manufacturer's product information literature.

A10.4.4 The following include nonionizing radiation information sources:

(1) American National Standards Institute. ANSI Z136.1, *Safe Use of Lasers,* New York, NY: American National Standards Institute.

(2) ——. ANSI Z87.1, *Practice for Occupational and Educational Eye and Face Protection.* New York, NY: American National Standards Institute.

(3) ——. ANSI Z49.1, *Safety in Welding, Cutting, and Allied Processes.* (published by AWS) Miami, FL: American Welding Society.

(4) Hinrichs, J. F. "Project committee on radiation-summary report." *Welding Journal,* January 1978.

(5) Moss, C. E. "Optical radiation transmission levels through transparent welding curtains." *Welding Journal,* March 1979.

(6) Moss, C. E. and Murray, W. E. "Optical radiation levels produced in gas welding, torch brazing, and oxygen cutting." *Welding Journal,* September 1979.

(7) Marshall, W. J., Sliney, D. H. and others. "Optical radiation levels produced by air-carbon arc cutting processes." *Welding Journal,* March 1980.

(8) National Technical Information Service. Non-ionizing radiation protection special study no. 42-0053-77, "Evaluation of the potential hazards from actinic ultraviolet radiation generated by electric welding and cutting arcs." Springfield, VA: National Technical Information Service. ADA-033768.

(9) ——. Non-ionizing radiation protection special study no. 42-0312-77, "Evaluation of the potential retina hazards from optical radiation generated by electrical welding and cutting arcs." Springfield, VA: National Technical Information Service, ADA-043023.

SPECIFICATION FOR LOW-ALLOY STEEL ELECTRODES FOR FLUX CORED ARC WELDING

SFA-5.29

(Identical with AWS Specification A5.29-98.)

1. Scope

This specification prescribes requirements for the classification of low-alloy steel electrodes for flux cored arc welding (FCAW). Metal cored low-alloy steel electrodes are classified according to ANSI/AWS A5.28-96, *Specification for Low-Alloy Steel Filler Metals for Gas Shielded Arc Welding.*[1] Iron is the only element whose content exceeds 10.5 percent in weld metal produced using electrodes classified by this document.

PART A — GENERAL REQUIREMENTS

2. Normative References

2.1 ASTM Standards.[2] The following ASTM standards are referenced in the mandatory sections of this document:

(a) A 36/A 36M, *Specification for Carbon Structural Steel*

(b) A 203/A 203M, *Specification for Pressure Vessel Plates, Alloy Steel, Nickel*

(c) A 204/A 204M, *Specification for Pressure Vessel Plates, Alloy Steel, Molybdenum*

(d) A 285/A 285M, *Specification for Pressure Vessel Plates, Carbon Steel, Low- and Intermediate-Tensile Strength*

(e) A 302/A 302M, *Specification for Pressure Vessel Plates, Alloy Steel, Manganese-Molybdenum and Manganese-Molybdenum-Nickel*

(f) A 387/A 387M, *Specification for Pressure Vessel Plates, Alloy Steel, Chromium Molybdenum*

(g) A 514/A 514M, *Specification for High-Yield Strength, Quenched and Tempered Alloy Steel Plate, Suitable for Welding*

(h) A 537/A 537M, *Specification for Pressure Vessel Plates, Heat Treated, Carbon-Manganese-Silicon Steel*

(i) A 588/A 588M, *Specification for High-Strength Low-Alloy Structural Steel with 50 ksi [345 MPa] Minimum Yield Point to 4 in. [100 mm] Thick*

(j) E 29, *Practice for Using Significant Digits in Test Data to Determine Conformance with Specifications*

(k) E 142, *Standard Test Methods for Controlling Quality of Radiographic Testing*

(l) E 350, *Standard Test Methods for Chemical Analysis of Carbon Steel, Low-Alloy Steel, Silicon Electrical Steel, Ingot Iron, and Wrought Iron*

2.2 AWS Standards. The following ANSI/AWS standards are referenced in the mandatory sections of this document:

(a) ANSI/AWS A5.01, *Filler Metal Procurement Guidelines*

(b) ANSI/AWS A4.3, *Standard Methods for Determination of the Diffusible Hydrogen Content of Martensitic, Bainitic, and Ferritic Steel Weld Metal Produced by Arc Welding*

(c) ANSI/AWS B4.0, *Standard Methods for Mechanical Testing of Welds*

(d) ANSI/ASC Z49.1, *Safety in Welding, Cutting, and Allied Processes*

2.3 MIL Standards.[3] The following MIL standard is referenced in the mandatory sections of this document:

(a) MIL-S-16216, *Specification for Steel Plate, Alloy, Structural, High Yield Strength (HY-80 and HY-100)*

[1] AWS standards can be obtained from the American Welding Society, 550 N.W. LeJeune Road, Miami, FL 33126.

[2] ASTM standards can be obtained from the American Society for Testing and Materials, 100 Barr Harbor Drive, West Conshohocken, PA 19428.

[3] MIL standards are available from contracting activity or as directed by contracting activity.

TABLE 1
TENSION TEST REQUIREMENTS

AWS Classification[a]	Tensile Strength Range ksi	Tensile Strength Range MPa	Yield Strength @ 0.2% Offset, Min. ksi	Yield Strength @ 0.2% Offset, Min. MPa	% Elongation in 2 in. (51 mm) Min.
E6XTX-X, -XM	60–80	410–550	50	340	22
E7XTX-X, -XM	70–90	480–620	58	400	20
E8XTX-X, -XM	80–100	550–690	68	470	19
E9XTX-X, -XM	90–110	620–760	78	540	17
E10XTX-X, -XM	100–120	690–830	88	610	16
E10XTX-K9, -K9M	(c)	(c)	82–97	560–670	18
E11XTX-X, -XM	110–130	760–900	98	680	15
E12XTX-X, -XM	120–140	830–970	108	745	14
EXXTX-G[b]	Properties as agreed upon between supplier and purchaser				
EXXTG-X[b]					
EXXTG-G[b]					

NOTES:
(a) The "X's" in actual classification designations will be replaced with appropriate designators for usability characteristics specified in Table 3 and for chemical composition as specified in Table 4.
(b) Placement of a "G" in this designation indicates those properties that have been agreed upon between the supplier and purchaser. Other properties are dictated by the digit(s) or suffix replacing the X. Variations used in this specification include the following:
(1) EXXTX-G — Alloy requirements are as agreed upon. The mechanical properties and slag system are as indicated by the digits used.
(2) EXXTG-X — The slag system and shielding gas are as agreed upon. Mechanical properties and alloy requirements conform to those indicated by the digits.
(3) EXXTG-G — The slag system, shielding gas, and alloy requirements are as agreed upon. Mechanical properties conform to those indicated by the digits.
(c) For this classification, E10XTX-K9, K9M, the "10" is an approximation of the tensile strength, not a requirement.

3. Classification

3.1 The electrodes covered by this specification are classified according to the following:

(a) the mechanical properties of the weld metal, as specified in Tables 1 and 2;

(b) certain usability characteristics of the electrode, as specified in Table 3;

(c) the positions of welding for which the electrodes are suitable, as specified in Table 3; and

(d) chemical composition of the weld metal, as specified in Table 4.

3.2 Electrodes classified under one classification shall not be classified under any other classification in this specification. However, gas shielded electrodes may be classified with 100 percent CO_2 shielding gas, 75 to 80 percent argon/balance CO_2 shielding gas or both. The "M" designator means that the electrode has been classified with a 75 to 80 percent argon/balance CO_2 shielding gas mixture.

3.3 The electrodes classified under this specification are intended for FCAW either with or without an external shielding gas.

Electrodes intended for use without external shielding gas, or with the shielding gases specified in Table 3, are not prohibited from use with any other process or shielding gas for which they are found suitable.

4. Acceptance

Acceptance of the welding electrodes shall be in accordance with the provisions of ANSI/AWS A5.01, *Filler Metal Procurement Guidelines.*

5. Certification

By affixing the AWS Specification and Classification designations to the packaging, or the classification designations to the product, the manufacturer certifies that the product meets the requirements of this specification.[4]

[4] See Section A4, Certification (in the Annex), for further information concerning certification and the testing called for to meet this requirement.

TABLE 2
IMPACT REQUIREMENTS

Classification	Condition[a]	Min. Impact Strength[b]
E8XT1-A1, -A1M	PWHT	Not Required
E7XT5-A1, -A1M	PWHT	20 ft · lbf @ −20°F (27 J @ −29°C)
E8XT1-B1, -B1M	PWHT	Not Required
E8XT1-B1L, -B1LM	PWHT	Not Required
E8XT1-B2, -B2M	PWHT	Not Required
E8XT5-B2, -B2M	PWHT	Not Required
E8XT1-B2H, B2HM	PWHT	Not Required
E8XT1-B2L, -B2LM	PWHT	Not Required
E8XT5-B2L, -B2LM	PWHT	Not Required
E8XT5-B6[c], -B6M	PWHT	Not Required
E8XT5-B6L[c], -B6LM	PWHT	Not Required
E8XT5-B8[c], -B8M	PWHT	Not Required
E8XT5-B8L[c], -B8LM	PWHT	Not Required
E9XT1-B3, -B3M	PWHT	Not Required
E9XT5-B3, -B3M	PWHT	Not Required
E10XT1-B3, -B3M	PWHT	Not Required
E9XT1-B3L, -B3LM	PWHT	Not Required
E9XT1-B3H, -B3HM	PWHT	Not Required
E6XT1-Ni1, -Ni1M	AW	20 ft · lbf @ −20°F (27 J @ −29°C)
E7XT6-Ni1	AW	20 ft · lbf @ −20°F (27 J @ −29°C)
E7XT8-Ni1	AW	20 ft · lbf @ −20°F (27 J @ −29°C)
E8XT1-Ni1, -Ni1M	AW	20 ft · lbf @ −20°F (27 J @ −29°C)
E8XT5-Ni1, -Ni1M	PWHT	20 ft · lbf @ −60°F (27 J @ −51°C)
E7XT8-Ni2	AW	20 ft · lbf @ −20°F (27 J @ −29°C)
E8XT8-Ni2	AW	20 ft · lbf @ −20°F (27 J @ −29°C)
E8XT1-Ni2, -Ni2M	AW	20 ft · lbf @ −40°F (27 J @ −40°C)
E8XT5-Ni2[d], -Ni2M[d]	PWHT	20 ft · lbf @ −75°F (27 J @ −60°C)
E9XT1-Ni2, -Ni2M	AW	20 ft · lbf @ −40°F (27 J @ −40°C)
E8XT5-Ni3[d], -Ni3M[d]	PWHT	20 ft · lbf @ −100°F (27 J @ −73°C)
E8XT11-Ni3	AW	20 ft · lbf @ 0°F (27 J @ −18°C)
E9XT5-Ni3[d], -Ni3M[d]	PWHT	20 ft · lbf @ −100°F (27 J @ −73°C)
E9XT1-D1, -D1M	AW	20 ft · lbf @ −40°F (27 J @ −40°C)
E9XT5-D2, -D2M	PWHT	20 ft · lbf @ −60°F (27 J @ −51°C)
E10XT5-D2, -D2M	PWHT	20 ft · lbf @ −40°F (27 J @ −40°C)
E9XT1-D3, -D3M	AW	20 ft · lbf @ −20°F (27 J @ −29°C)
E8XT5-K1, -K1M	AW	20 ft · lbf @ −40°F (27 J @ −40°C)
E7XT7-K2	AW	20 ft · lbf @ −20°F (27 J @ −29°C)
E7XT4-K2	AW	20 ft · lbf @ 0°F (27 J @ −18°C)
E7XT8-K2	AW	20 ft · lbf @ −20°F (27 J @ −29°C)
E8XT1-K2, -K2M	AW	20 ft · lbf @ −20°F (27 J @ −29°C)
E9XT1-K2, -K2M	AW	20 ft · lbf @ 0°F (27 J @ −18°C)
E8XT5-K2, -K2M	AW	20 ft · lbf @ −20°F (27 J @ −29°C)
E7XT11-K2	AW	20 ft · lbf @ +32°F (27 J @ 0°C)
E9XT5-K2, -K2M	AW	20 ft · lbf @ −60°F (27 J @ −51°C)
E10XT1-K3, -K3M	AW	20 ft · lbf @ 0°F (27 J @ −18°C)
E11XT1-K3, -K3M	AW	20 ft · lbf @ 0°F (27 J @ −18°C)
E10XT5-K3, -K3M	AW	20 ft · lbf @ −60°F (27 J @ −51°C)
E11XT5-K3, -K3M	AW	20 ft · lbf @ −60°F (27 J @ −51°C)
E11XT1-K4, -K4M	AW	20 ft · lbf @ 0°F (27 J @ −18°C)
E11XT5-K4, -K4M	AW	20 ft · lbf @ −60°F (27 J @ −51°C)
E12XT5-K4, -K4M	AW	20 ft · lbf @ −60°F (27 J @ −51°C)
E12XT1-K5, -K5M	AW	Not Required
E7XT5-K6, -K6M	AW	20 ft · lbf @ −75°F (27 J @ −60°C)
E6XT8-K6	AW	20 ft · lbf @ −20°F (27 J @ −29°C)
E7XT8-K6	AW	20 ft · lbf @ −20°F (27 J @ −29°C)
E10XT1-K7, -K7M	AW	20 ft · lbf @ −60°F (27 J @ −51°C)
E9XT8-K8	AW	20 ft · lbf @ −20°F (27 J @ −29°C)
E10XT1-K9, -K9M	AW	20 ft · lbf @ −60°F (47 J @ −51°C)
E8XT1-W2, -W2M	AW	20 ft · lbf @ −20°F (27 J @ −29°C)

TABLE 2 (CONT'D)
IMPACT REQUIREMENTS

Classification	Condition[a]	Min. Impact Strength[b]
EXXXTX-G EXXXTG-G EXXXTG-X	Not Specified[e]	Not Specified[e]

NOTES:
a. AW = As welded.
PWHT = Postweld heat treated in accordance with Table 8.
b. Electrodes with the optional supplemental impact designator "J" shall meet the 20 ft · lbf (27 J) requirement at a test temperature of 20°F (11°C) lower than the temperature shown above. For example, an E81T1-Ni1MJ would meet the 20 ft · lbf (27 J) requirement at −40°F (−40°C).
c. These electrodes are presently also Classified E502TX-X or E505TX-X in AWS A5.22-95. With the next revision of A5.22, they will be removed and exclusively listed in this specification.
d. PWHT temperatures in excess 1150°F (620°C) will decrease the impact value.
e. See Table 1, Note b.

6. Units of Measure and Rounding-Off Procedure

6.1 U.S. Customary Units are the standard units of measure in this specification. The SI Units are given as equivalent values to the U.S. Customary Units. The standard sizes and dimensions in the two systems are not identical and, for this reason, conversion from a standard size or dimension in one system will not always coincide with a standard size or dimension in the other. Suitable conversions, encompassing standard sizes of both, can be made, however, if appropriate tolerances are applied in each case.

6.2 For the purpose of determining conformance with this specification, an observed or calculated value shall be rounded to the "nearest unit" in the last right-hand place of figures used in expressing the limiting value for quantities in the appropriate tables in accordance with the rounding-off method given in ASTM E 29, *Standard Practice for Using Significant Digits in Test Data to Determine Conformance with Specifications.*

PART B — TESTS, PROCEDURES, AND REQUIREMENTS

7. Summary of Tests

The tests required for each classification are specified in Table 5. The purpose of these tests is to determine the mechanical properties, soundness, the chemical composition of the weld metal, and usability of the electrode. The base metal for the weld test assemblies, the welding and testing procedures to be employed, and the results required are given in Sections 9 through 14.

The optional supplemental test for diffusible hydrogen in Section 15 is not required for classification, but is included for an optional electrode designation as agreed to between the purchaser and supplier. Another optional supplemental designator (J) may be used to indicate Charpy impact testing at lower than standard temperature.

8. Retest

If any test fails to meet the requirement, that test shall be repeated twice. The results of both retests shall meet the requirement. Specimens for the retest may be taken from the original test assembly or from a new test assembly. For chemical analysis, retest need be only for those specific elements that failed to meet their test requirement. If the results of one or both retests fail to meet the requirement, the material under test shall be considered as not meeting the requirements of this specification for that classification.

In the event that, during preparation or after completion of any test, it is clearly determined that prescribed or proper procedures were not followed in preparing the weld test assembly or test specimen(s), or in conducting the tests, the test shall be considered invalid, without regard to whether the test was actually completed, or whether test results met, or failed to meet, the requirement. That test shall be repeated, following proper prescribed procedures. In this case, the requirement for doubling the number of test specimens does not apply.

9. Weld Test Assemblies

9.1 Two or three weld test assemblies are required, depending on the classification of the electrode and

TABLE 3
POSITION OF WELDING, SHIELDING, POLARITY, AND APPLICATION REQUIREMENTS

AWS Classification[a]	Position[b, c] of Welding	External Shielding[d]	Polarity[e]	Application[f]
EX0T1-X	H, F	CO_2	DCEP	M
EX0T1-XM	H, F	75–80%Ar/bal CO_2	DCEP	M
EX1T1-X	H, F, VU, OH	CO_2	DCEP	M
EX1T1-XM	H, F, VU, OH	75–80%Ar/bal CO_2	DCEP	M
EX0T4-X	H, F	None	DCEP	M
EX0T5-X	H, F	CO_2	DCEP	M
EX0T5-XM	H, F	75–80%Ar/bal CO_2	DCEP	M
EX1T5-X	H, F, VU, OH	CO_2	DCEP or DCEN[g]	M
EX1T5-XM	H, F, VU, OH	75–80%Ar/bal CO_2	DCEP or DCEN[g]	M
EX0T6-X	H, F	None	DCEP	M
EX0T7-X	H, F	None	DCEN	M
EX1T7-X	H, F, VU, OH	None	DCEN	M
EX0T8-X	H, F	None	DCEN	M
EX1T8-X	H, F, VU, or VD, OH[i]	None	DCEN	M
EXXT1-K9	VU, H, F, OH	CO_2	DCEP	M
EXXT1-K9M	VU, H, F, OH	75–80%Ar/bal CO_2	DCEP	M
EX0T11-X	H, F	None	DCEN	M
EX1T11-X	H, F, VD, OH	None	DCEN	M
EX0TG-X	H, F	—	Not Specified[h]	—
EX1TG-X	H, F, VU or VD, OH	—	Not Specified[h]	—

NOTES:
a. The "X" indicates the tensile strength and chemical composition.
b. H = Horizontal position
F = Flat position
OH = Overhead position
VU = Vertical position with upward progression
VD = Vertical position with downward progression
c. Electrode sizes suitable for welding in all positions usually are those sizes that are smaller than the $^3/_{32}$ in. (2.4 mm) or nearest size called for in 9.4.1 for the groove weld. For that reason, electrodes meeting the requirements for the groove weld tests and fillet weld tests may be classified as EX1TX-X or EX1TX-XM (where X represents the tensile strength and usability designator) regardless of their size. See Section A7 and Figure A1 in the Annex for more information.
d. Properties of weld metal from electrodes that are used with external gas shielding (EXXT1-X, EXXT1-XM, EXXT5-X, and EXXT5-XM) vary according to the shielding gas employed. Electrodes classified with the specified shielding gas should not be used with other shielding gases without first consulting the manufacturer of the electrode.
e. The term DCEP refers to direct current electrode positive (dc, reverse polarity). The term DCEN refers to direct current electrode negative (dc, straight polarity).
f. M = single and multipass.
g. Some EX1T5-X and EX1T5-XM electrodes may be recommended for use on DCEN for improved out-of-position welding. Consult the manufacturer for the recommended polarity.
h. See Table 1, footnote (b).
i. Per manufacturer's recommendations.

the manner in which the tests are conducted. They are as follows:

(a) the weld pad shown in Fig. 1 for chemical analysis of the undiluted weld metal,

(b) the groove weld shown in Fig. 2 for mechanical properties and soundness of the weld metal, and

(c) the fillet weld shown in Fig. 3, for usability of the electrode.

The sample for chemical analysis may be taken from the reduced section of the fractured tension test specimen or from a corresponding location (or any location above it) in the weld metal in the groove weld in Fig. 2, thereby avoiding the need to make the weld pad. In case of dispute, the weld pad shall be the referee method.

9.2 Preparation of each weld test assembly shall be as prescribed in 9.3, 9.4, and 9.5. The base metal for each assembly shall be as required in Table 6 and shall meet the requirements of any of the ASTM specifications shown there, or an equivalent specification. Testing of the assemblies shall be as prescribed in Sections 10 through 14.

TABLE 4
CHEMICAL COMPOSITION REQUIREMENTS FOR UNDILUTED WELD METAL

AWS Classification	UNS Number[b]	Weight-Percent[a]										
		C	Mn	P	S	Si	Ni	Cr	Mo	V	Al[c]	Cu
Carbon-Molybdenum Steel Electrodes												
E7XT5-A1, -A1M E8XT1-A1, -A1M	W17035 W17031	0.12	1.25	0.03	0.03	0.80	—	—	0.40–0.65	—	—	—
Chromium-Molybdenum Electrodes												
E8XT1-B1, -B1M	W51031	0.05–0.12	1.25	0.03	0.03	0.80	—	0.40–0.65	0.40–0.65	—	—	—
E8XT1-B1L, -B1LM	W51131	0.05	1.25	0.03	0.03	0.80	—	0.40–0.65	0.40–0.65	—	—	—
E8XT1-B2, -B2M E8XT5-B2, -B2M	W52031 W52035	0.05–0.12	1.25	0.03	0.03	0.80	—	1.00–1.50	0.40–0.65	—	—	—
E8XT1-B2L, -B2LM E8XT5-B2L, -B2LM	W52131 W52135	0.05	1.25	0.03	0.03	0.80	—	1.00–1.50	0.40–0.65	—	—	—
E8XT1-B2H, -B2HM	W52231	0.10–0.15	1.25	0.03	0.03	0.08	—	1.00–1.50	0.40–0.65	—	—	—
E9XT1-B3, -B3M E9XT5-B3, -B3M E10XT1-B3, -B3M	W53031 W53035 W53031	0.05–0.12	1.25	0.03	0.03	0.80	—	2.00–2.50	0.90–1.20	—	—	—
E9XT1-B3L, -B3LM	W53131	0.05	1.25	0.03	0.03	0.80	—	2.00–2.50	0.90–1.20	—	—	—
E9XT1-B3H, -B3HM	W53231	0.10–0.15	1.25	0.03	0.03	0.80	—	2.00–2.50	0.90–1.20	—	—	—
E8XT5-B6[d], -B6M	W50231	0.05–0.12	1.25	0.04	0.03	1.0	0.40	4.0–6.0	0.45–0.65	—	—	0.50
E8XT5-B6L, -B6LM	W50230	0.05	1.25	0.04	0.03	1.0	0.40	4.0–6.0	0.45–0.65	—	—	0.50
E8XT5-B8[d], -B8M	W50431	0.05–0.12	1.25	0.04	0.03	1.0	0.40	8.0–10.5	0.85–1.20	—	—	0.50
E8XT5-B8L, -B8LM	W50430	0.05	1.25	0.03	0.03	1.0	0.40	8.0–10.5	0.85–1.20	—	—	0.50
Nickel-Steel Electrodes												
E7XT8-Ni1 E7XT6-Ni1	W21038 W21036	0.12	1.50	0.03	0.03	0.80	0.80–1.10	0.15	0.35	0.05	1.8	—
E6XT1-Ni1, -Ni1M E8XT1-Ni1, -Ni1M E8XT5-Ni1, -Ni1M	W21031 W21031 W21035	0.12	1.50	0.03	0.03	0.80	0.80–1.10	0.15	0.35	0.05	—	—

(Continued)

TABLE 4 (CONT'D)
CHEMICAL COMPOSITION REQUIREMENTS FOR UNDILUTED WELD METAL

AWS Classification	UNS Number[b]	Weight-Percent[a]										
		C	Mn	P	S	Si	Ni	Cr	Mo	V	Al[c]	Cu
Nickel-Steel Electrodes (Cont'd)												
EX8T1-Ni2, -Ni2M	W22031											
E8XT5-Ni2, -Ni2M	W22035	0.12	1.50	0.03	0.03	0.80	1.75–2.75	—	—	—	—	—
E9XT1-Ni2, Ni2M	W22031											
E7XT8-Ni2	W22038											
E8XT8-Ni2	W22038	0.12	1.50	0.03	0.03	0.80	1.75–2.75	—	—	—	1.8	—
E8XT5-Ni3, -Ni3M	W23035	0.12	1.50	0.03	0.03	0.80	2.75–3.75	—	—	—	—	—
E9XT5-Ni3, -Ni3M	W23035	0.12	1.50	0.03	0.03	0.80	2.75–3.75	—	—	—	—	—
E8XT11-Ni3	W23039	0.12	1.50	0.03	0.03	0.80	2.75–3.75	—	—	—	1.8	—
Manganese-Molybdenum Steel Electrodes												
E9XT1-D1, -D1M	W19131	0.12	1.25–2.00	0.03	0.03	0.80	—	—	0.25–0.55	—	—	—
E9XT5-D2, -D2M	W19235	0.15	1.65-2.25	0.03	0.03	0.80	—	—	0.25–0.55	—	—	—
E10XT5-D2, -D2M	W19235											
E9XT1-D3, -D3M	W19331	0.12	1.00–1.75	0.03	0.03	0.80	—	—	0.40–0.65	—	—	—
All Other Low-Alloy Steel Electrodes												
E8XT5-K1, -K1M	W21135	0.15	0.80–1.40	0.03	0.03	0.80	0.80–1.10	0.15	0.20–0.65	0.05	—	—
E7XT4-K2	W21234											
E7XT7-K2,	W21237	0.15	0.50–1.75	0.03	0.03	0.80	1.00–2.00	0.15	0.35	0.05	1.8	—
E7XT8-K2	W21238											
E7XT11-K2	W21239											
E8XT1-K2, -K2M	W21231											
E9XT1-K2, -K2M	W21231	0.15	0.50–1.75	0.03	0.03	0.80	1.00–2.00	0.15	0.35	0.05	—	—
E8XT5-K2, -K2M	W21235											
E9XT5-K2, -K2M	W21235											
E10XT1-K3, -K3M	W21331											
E11TX1-K3, -K3M	W21331	0.15	0.75–2.25	0.03	0.03	0.80	1.25–2.60	0.15	0.25–0.65	0.05	—	—
E10XT5-K3, -K3M	W21335											
E11XT5-K3, -K3M	W21335											

(Continued)

TABLE 4 (CONT'D)
CHEMICAL COMPOSITION REQUIREMENTS FOR UNDILUTED WELD METAL

AWS Classification	UNS Number[b]	Weight-Percent[a]										
		C	Mn	P	S	Si	Ni	Cr	Mo	V	Al[c]	Cu
All Other Low-Alloy Steel Electrodes (Cont'd)												
E11XT1-K4, -K4M	W22231										—	—
E11XT5-K4, -K4M	W22235	0.15	1.20–2.25	0.03	0.03	0.80	1.75–2.60	0.20–0.60	0.20–0.65	0.03		
E12XT5-K4, -K4M	W22235											
E12XT1-K5, K5M	W21631	0.10–0.25	0.60–1.60	0.03	0.03	0.80	0.75–2.00	0.20–0.70	0.15–0.55	0.05	—	—
E6XT8-K6	W21048	0.15	0.50–1.50	0.03	0.03	0.80	0.40–1.00	0.20	0.15	0.05	1.8	—
E7XT8-K6	W21048											
E7XT5-K6, -K6M	W21045	0.15	0.50–1.50	0.03	0.03	0.80	0.40–1.00	0.20	0.15	0.05	—	—
E10XT1-K7, -K7M	W22051	0.15	1.00–1.75	0.03	0.03	0.80	2.00–2.75	—	—	—	—	—
E9XT8-K8	W21438	0.15	1.00–2.00	0.03	0.03	0.40	0.50–1.50	0.20	0.20	0.05	1.8	—
E10XT1-K9, -K9M	W23230	0.07	0.50–1.50	0.015	0.015	0.60	1.30–3.75	0.20	0.50	0.05	—	0.06
E8XT1-W2, -W2M	W20131	0.12	0.50–1.30	0.03	0.03	0.35–0.80	0.40–0.80	0.45–0.70	—	—	—	0.30–0.75
EXXTX-G	—	—	1.75[e]	0.03	0.03	0.80[e]	0.50[e]	0.30[e]	0.20[e]	0.10[e]	1.8[e]	—

NOTES:
a. Single values are maximum unless otherwise noted.
b. SAE/ASTM Unified Numbering System for Metals and Alloys.
c. For self-shielded electrodes only.
d. Classification also appears in AWS A5.22-95, *Specification for Stainless Steel Electrodes for Flux Cored Arc Welding and Stainless Steel Flux Cored Rods for Gas Tungsten Arc Welding.* These classifications will be deleted from the first revision of A5.22 following publication of this specification.
e. In order to meet the alloy requirements of the G group, the undiluted weld metal shall have the minimum of at least one of the elements listed in this table. Shielding gas, slag system, and mechanical properties are dictated by the digit(s) replacing X(s).

TABLE 5
REQUIRED TESTS

AWS Classification[a, b]	Chemical Analysis	Radiographic Test	Tension Test (Flat Position)	Impact Test	Fillet Weld Test	Diffusible Hydrogen
EX0TX-X	Required	Required	Required	c	Required	Optional[b]
EX1TX-X	Required	Required	Required	c	Required	Optional[b]
E10XTX-K9, -K9M	Required	Required[f]	Required[f]	c, f	Required	Required
EXXTG-X EXXTX-G EXXTG-G	Required	Required	Required[d]	c	Required	Optional[b]

NOTES:
a. The 0 and 1 before "T" refer to the position of welding for which the electrode is suitable. See A2.2.
   0 = Horizontal and flat position.
   1 = All positions (smaller than $^3/_{32}$ in. [2.4 mm] diameter); i.e., flat, horizontal, overhead, and vertical. See Table 3.
b. Electrodes with supplemental toughness requirements, diffusible hydrogen requirements, or both, may be further identified as shown in Tables 2 and 10 and Figure A1.
c. The Charpy V-notch impact test is required when the classification in accordance with Table 2 indicates impact requirements.
d. Minimum all-weld-metal tensile strength shall match that indicated by the designator being employed.
e. As agreed upon between supplier and purchaser.
f. Vertical position with upward progression.

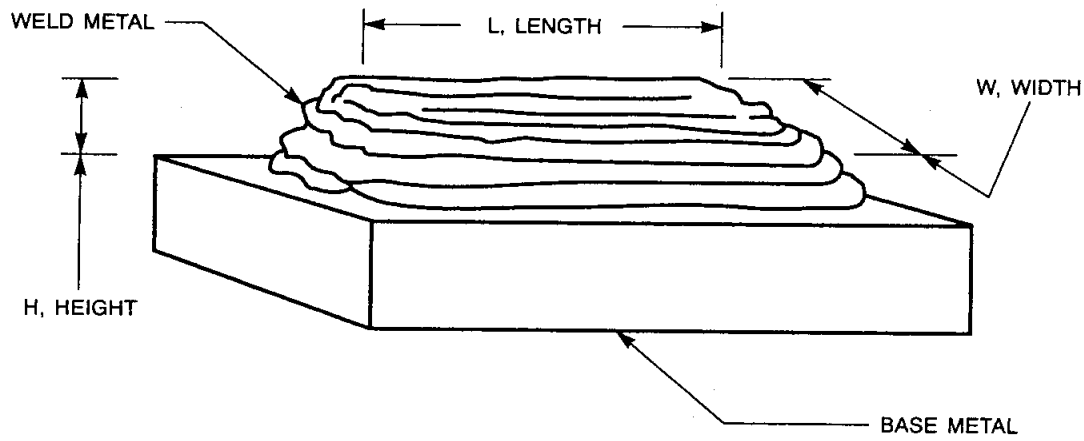

Weld Pad Size, Minimum					
Length, L		Width, W		Height, H	
in.	mm	in.	mm	in.	mm
1-1/2	38	1/2	13	1/2	13

GENERAL NOTES:
1. Base metal of any convenient size, of the type specified in Table 6, shall be used as the base for the weld pad.
2. The surface of the base metal on which the filler metal is to be deposited shall be clean.
3. The pad shall be welded in the flat position with successive layers to obtain undiluted weld metal, using shielding gas and current/polarity as specified in Table 3.
4. The number and size of the beads will vary according to the size of the electrode and the width of the weave, as well as with the amperage employed. The weave should be limited to 6 times the electrode diameter.
5. The preheat temperature shall not be less than 60°F (16°C) and the interpass temperature shall not exceed 325°F (163°C).
6. The test assembly may not be quenched in water (temperature unimportant) between passes to control interpass temperature.
7. The minimum completed pad size shall be that shown above. The sample to be tested in Section 10 shall be taken from weld metal that is at least $^3/_8$ in. (9.5 mm) above the original base metal surface.

FIG. 1 PAD FOR CHEMICAL ANALYSIS OF UNDILUTED WELD METAL

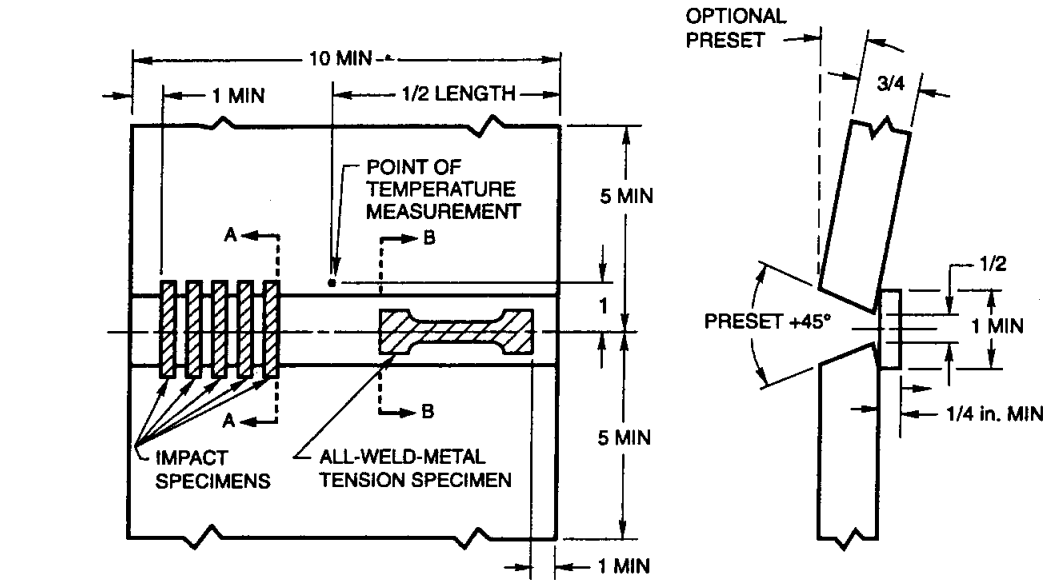

(A) TEST PLATE SHOWING LOCATION OF TEST SPECIMENS

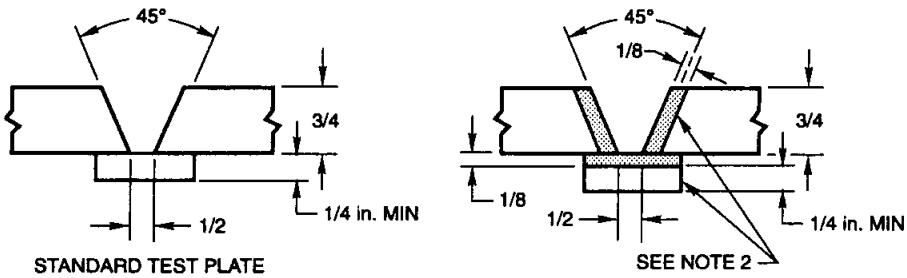

SI EQUIVALENTS	
in.	mm
1/8	3.2
1/4	6.4
3/8	9.5
1/2	13
3/4	19.1
1.0	25
5	125
10	250

(B) GROOVE PREPARATION OF TEST PLATE

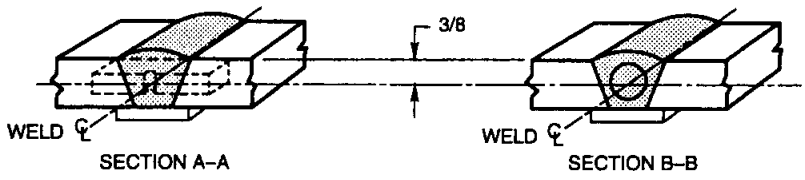

(C) ORIENTATION OF IMPACT SPECIMEN

(D) LOCATION OF ALL-WELD-METAL TENSION SPECIMEN

GENERAL NOTES:

1. Prior to welding, the assembly may be preset as shown so that the welded joint will be sufficiently flat to facilitate test specimen removal. As an alternative, restraint or a combination of restraint and preset may be used.
2. When required, edges of the grooves and the contacting face of the backing shall be buttered as shown. Any size of the electrode being tested may be used for buttering.
3. All dimensions except angles are in inches.

FIG. 2 GROOVE WELD TEST ASSEMBLY FOR MECHANICAL PROPERTIES AND SOUNDNESS OF WELD METAL

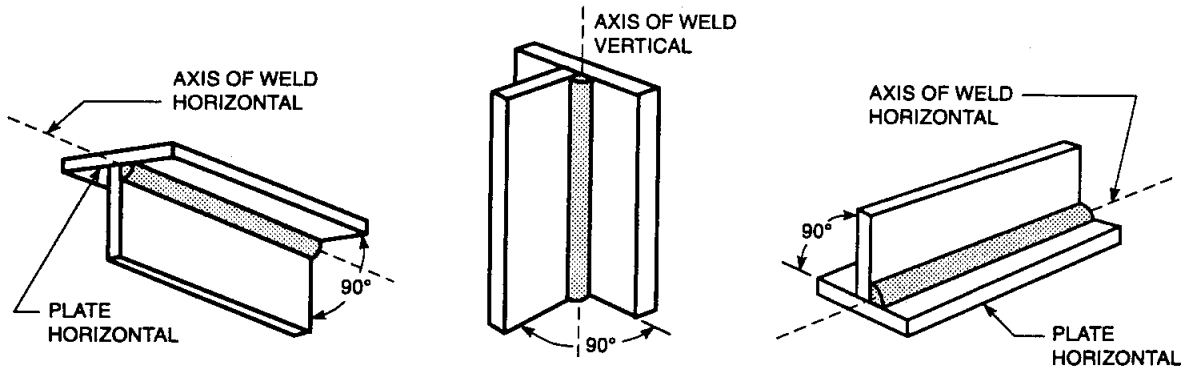

(A) OVERHEAD FILLET WELDS (B) VERTICAL FILLET WELDS (C) HORIZONTAL FILLET WELDS

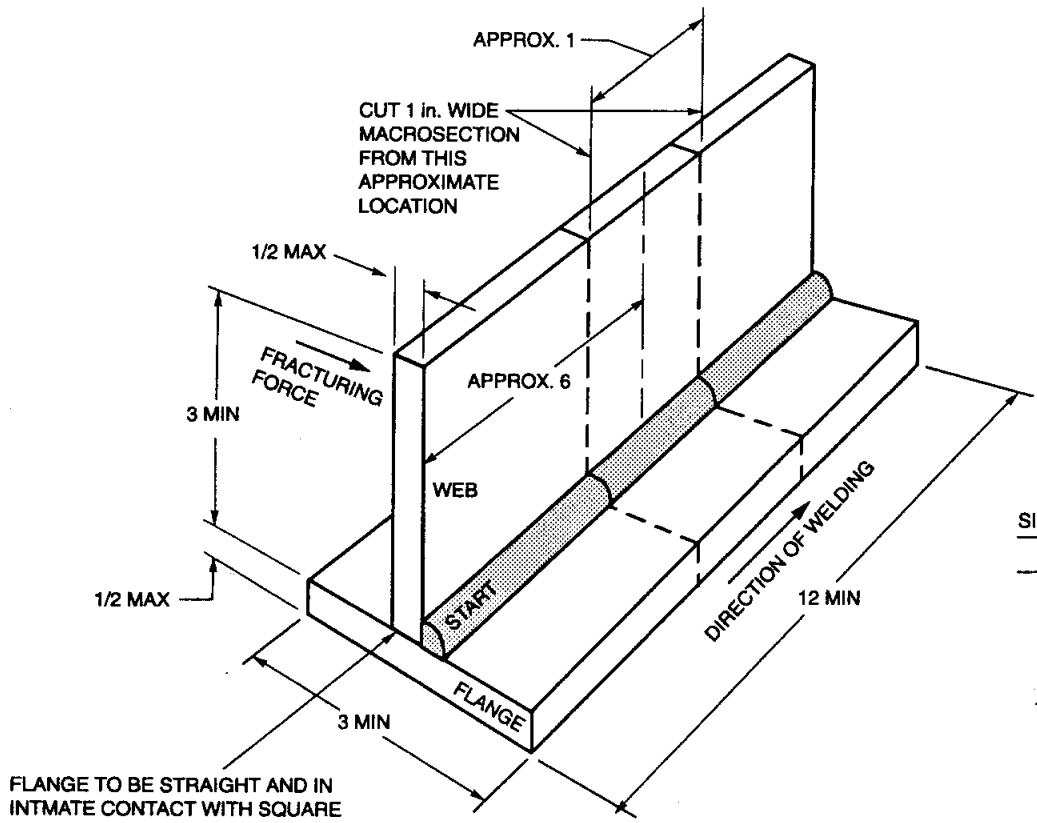

FLANGE TO BE STRAIGHT AND IN INTMATE CONTACT WITH SQUARE MACHINED EDGE OF WEB MEMBER ALONG ENTIRE LENGTH TO INSURE MAXIMUM RESTRAINT.

SI EQUIVALENTS

in.	mm
1/2	13
1	25
3	75
6	150
12	300

GENERAL NOTES:

1. The surfaces to be welded shall be clean.
2. One assembly shall be welded for each position specified in Table 3, using the required shielding gas and polarity to the classification specified.
3. The preheat shall be 60°F (16°C) minimum.
4. A single-pass fillet weld shall be made on one side of the joint.
5. Welding in the vertical position shall be as described in Table 3.
6. Weld cleaning shall be limited to slag chipping, brushing, and needle scaling. Grinding or filing of the weld surface is prohibited.
7. The tests shall be conducted without postweld heat treatment.
8. All dimensions are in inches.
9. If the web and flange thicknesses are less than or equal to ¼ in. (6.4 mm), the web and flange widths shall be 2 in. (51 mm) min.

FIG. 3 FILLET WELD TEST ASSEMBLY

TABLE 6
BASE-METAL REQUIREMENTS[a]

Weld Metal Designation	Base Metal	
	ASTM and Military Standards[a]	UNS Number[b]
A1	A 204, Grade A, B, or C	(A) K11820 (B) K12020 (C) K12320
B1, B2, B2L, B2H	A 387, Grade 11	K11789
B3, B3L, B3H	A 387, Grade 22	K21590
B6, B6L	A 387, Grade 5	S50200
B8, B8L	A 387, Grade 9	S50400
Ni1	A 537, Class 1 or 2	K12437
Ni2, Ni3	A 203, Grade E	K32018
	HY80 or HY100 steel in accordance with MIL-S-16216	K31820 or K32045
D1, D2, D3	A 302, Grade A or B	K12021, K12022
W2	A 588, Grade A, B, or C	(A) K11430 (B) K12043 (C) K11538
K1, K3, K4, K5, K7, K9[c]	A 514, any grade	(A) K11856
	HY80 or HY100 steel in accordance with MIL-S-16216	K31820 or K32045
K6, K2, K8	A 537, Class 1 or 2	K12437

NOTES:
a. ASTM A 35 or A 285 base metals may be used; however, the joint surfaces shall be buttered (see Figure 2) using any electrode of the same composition as the classification being tested. Buttering is not necessary for EXXT4-X, EXXT6-X, EXXT7-X, EXXT8-X, and EXXT11-X electrodes with 70 ksi tensile strength or lower classification. Buttering is also not required for the fillet weld test.
b. SAE/ASTM Unified Numbering System for Metals and Alloys.
c. Buttering not allowed for K9 weld metal designation.

9.3 Weld Pad. A weld pad shall be prepared as shown in Fig. 1 except when, as permitted in 9.1, the sample for analysis is taken from the groove weld or the fractured tension test specimen. Base metal of any convenient size which will satisfy the minimum requirements of Fig. 1 and is of a type specified in Table 6, shall be used as the base for the weld pad. The surface of the base metal on which the filler metal is deposited shall be clean. The pad shall be welded in the flat position with multiple layers to obtain undiluted weld metal ($\frac{1}{2}$ in. [13 mm] minimum thickness).

The electrode size shall be $\frac{3}{32}$ in. (2.4 mm) or the size the manufacturer produces closest to $\frac{3}{32}$ in. (2.4 mm). The preheat temperature shall not be less than 60°F (16°C), and the interpass temperature shall not exceed 325°F (163°C). The slag shall be removed after each pass. The pad may be quenched in water between passes (temperature unimportant). The dimensions of the completed pad shall be as shown in Fig. 1. Testing of this assembly shall be as specified in Section 10.

9.4 Groove Weld

9.4.1 A test assembly using base metal as specified in Table 6 shall be prepared and welded as shown in Fig. 2. When ASTM A 36 or A 285 base metals are used, the groove faces and the contact face of the backing shall be buttered using an electrode of the same composition as the classification being tested except as noted in Table 6, Note a. If a buttering procedure is used, the layer shall be approximately $\frac{1}{8}$ in. (3.2 mm) thick (see Fig. 2, Note 2).

The electrode size shall be $\frac{3}{32}$ in. (2.4 mm) diameter, or the size the manufacturer produces that is closest to $\frac{3}{32}$ in. (2.4 mm) diameter, and the welding conditions shall be those listed in Tables 3 and 7 for the classification being tested. Welding shall be in the flat position and the assembly shall be restrained (or preset) during

TABLE 7
REQUIREMENTS FOR PASS AND LAYER CONTROL FOR MULTIPLE PASS ELECTRODE CLASSIFICATIONS[a]

AWS Classification	Electrode Size		Required Total Passes	Suggested Passes Per Layer		Suggested Number of Layers
	in.	mm		Layer #1	Layer #2 — Top	
EXXT1-X, -XM[d] EXXT5-X, -XM	0.030	0.8	12–19	1 or 2	2 or 3[b]	6–9
	0.035	0.9				
	0.045	1.1				
	0.052	1.3	10–17	1 or 2	2 or 3[b]	5–8
	1/16	1.6				
	5/64	2.0				
	3/32	2.4	7–14	1 or 2	2 or 3[b]	4–7
	7/64	2.8				
	1/8	3.2				
EXXT4-X	All Sizes[c]		7–11	1 or 2	2 or 3[b]	4–6
EXXT6-X EXXT7-X	All Sizes[c]		7–14	1 or 2	2 or 3[b]	4–8
EXXT8-X	All Sizes[c]		12–18	1 or 2	2 or 3[b]	6–9
EXXT11-X	All Sizes[c]		9–18	1 or 2	2 or 3[b]	5–9
EXXTG-X EXXTX-G EXXTG-G	Not Specified, To be Recorded					

NOTES:
a. Actual number of passes, electrode diameter, wire feed speed or amperes, arc voltage, travel speed, and electrode extension (electrical extension) shall be recorded and made available to the user on request. See A6.2 in the annex.
b. The final layer may be 4 passes.
c. The electrode size shall be 3/32 in. (2.4 mm) or the size that the manufacturer produces that is closer to 3/32 in. (2.4 mm).
d. For class E10XT1-K9, -K9M, both the pass and layer sequence are controlled by the required heat input rate of 50–55 kJ/inch.

welding to prevent warpage in excess of 5 degrees. An assembly that is warped more than 5 degrees from plane shall be discarded. It shall not be straightened.

The test assembly shall be tack welded and shall be heated to the preheat temperature prescribed in Table 8 for the electrode classification being tested before welding begins. Welding shall continue until the assembly has reached the prescribed interpass temperature range in Table 8, measured by temperature indicating crayons or surface thermometers at the location shown in Fig. 2. This interpass temperature shall be maintained for the remainder of the weld. Should it be necessary to interrupt welding, the assembly shall be allowed to cool in still air at room temperature.

The assembly shall be heated to a temperature within the prescribed preheat and interpass temperature range in Table 8 before welding is resumed. Test assemblies made with electrodes shown in the PWHT condition in Table 2 shall be postweld heat treated as specified in Table 8. When welding has been completed and the assembly has cooled, the assembly shall be prepared and tested as specified in Sections 11 through 13.

9.5 Fillet Weld. A test assembly shall be prepared and welded as required in Table 5 and specified in Fig. 3, using base metal of the appropriate type specified in Table 6 for each EX0TX-X classification that requires a test assembly welded in the horizontal position. Each EX1TX-X classification requires two test assemblies, one welded in the vertical position and one welded in the overhead position. The progression for vertical welding may be either upward or downward, depending on the classification (see Table 3).

Before assembly, the standing member (web) shall have one edge prepared throughout its length, and the base member (flange) side shall be straight, smooth, and clean. The test plates shall be assembled as shown in Fig. 3. When assembled, the faying surfaces shall be in intimate contact along the entire length of the

TABLE 8
PREHEAT, INTERPASS AND PWHT TEMPERATURES

AWS Classification[a]	Preheat and Interpass Temperature[b] °F	Preheat and Interpass Temperature[b] °C	PWHT Temperature[b] °F	PWHT Temperature[b] °C
E7XT5-A1, -A1M E8XT1-A1, -A1M E8XT5-Ni1, -Ni1M E8XT5-Ni2[c], -Ni2M E8XT5-Ni3[c], -Ni3M E9XT5-Ni3[c], -Ni3M E9XT5-D2, -D2M E10XT5-D2, -D2M	300 ± 25	150 ± 15	1150 ± 25	620 ± 15
E8XT5-B6, -B6M E8XT5-B6L, -B6LM E8XT5-B8, -B8M E8XT5-B8L, -B8LM	400 ± 100	200 ± 50	1375 ± 25[d]	745 ± 15
E8XT1-B1L, -B1LM E8XT1-B1, -B1M E8XT1-B2L, -B2LM E8XT1-B2, -B2M E8XT5-B2, -B2M E8XT1-B2H, -B2HM E8XT5-B2L, -B2LM E9XT1-B3, -B3M E9XT5-B3, -B3M E10XT1-B3, -B3M E9XT1-B3H, -B3HM E9XT1-B3L, -B3LM	350 ± 25	176 ± 15	1275 ± 25	690 ± 15

(Table 8 continued on next page)

joint. The test assembly shall be secured with tack welds deposited at each end of the weld joint.

The welding procedure and the size of the electrode to be tested shall be as selected by the manufacturer. The fillet weld shall be a single-pass weld deposited in either the semi-automatic or mechanized mode as selected by the manufacturer. The fillet weld size shall not be greater than $^3/_8$ in. (9.5 mm). The fillet weld shall be deposited only on one side of the joint as shown in Fig. 3. Weld cleaning shall be limited to chipping, brushing, and needle scaling. Grinding, filing, or other metal cutting of the fillet weld face is prohibited. The testing of the assembly shall be as specified in Section 14, Fillet Weld Test.

10. Chemical Analysis

10.1 A sample for chemical analysis of the weld metal shall be obtained for all electrodes in this specification. The samples may be taken from the weld pad prepared in accordance with 9.3, from the reduced section of the fractured tension test specimen, or from a corresponding location (or any location above it) in the weld metal in the groove weld in Fig. 2. In case of dispute, the weld pad is the referee method.

10.2 The top surface of the pad described in 9.3 and shown in Fig. 1, shall be removed and discarded, and a sample for analysis obtained from the underlying metal no closer than $^3/_8$ in. (9.5 mm) to the surface of the base metal in Fig. 1 by any appropriate mechanical means. The sample shall be free of slag. When the sample is taken from the groove weld or the reduced section of the fractured tension test specimen, that material shall be prepared for analysis by any suitable mechanical means.

10.3 The sample shall be analyzed by accepted analytical methods. The referee method shall be ASTM E 350, *Standard Test Methods for Chemical Analysis*

TABLE 8 (CONT'D)
PREHEAT, INTERPASS AND PWHT TEMPERATURES

AWS Classification[a]	Preheat and Interpass Temperature[b] °F	Preheat and Interpass Temperature[b] °C	PWHT Temperature[b] °F	PWHT Temperature[b] °C
E6XT1-Ni1, -Ni1M E7XT6-Ni1 E7XT8-Ni1 E8XT1-Ni1, -Ni1M E7XT8-Ni2 E8XT1-Ni2, -Ni2M E8XT8-Ni2 E8XT11-Ni3 E9XT1-Ni2, -Ni2M E9XT1-D1, -D1M E9XT1-D3, -D3M E8XT5-K1, -K1M E7XT4-K2 E7XT7-K2 E7XT8-K2 E7XT11-K2 E8XT1-K2, -K2M E8XT5-K2, -K2M E9XT1-K2, -K2M E9XT5-K2, -K2M E10XT1-K3, -K3M E10XT5-K3, -K3M E11XT1-K3, -K3M E11XT5-K3, -K3M E11XT1-K4, -K4M E11XT5-K4, -K4M E12XT1-K4, -K4M E12XT1-K5, -K5M E6XT8-K6 E7XT8-K6 E7XT5-K6, -K6M E9XT8-K8 E10XT1-K7, -K7M EXXT1-K9, -K9M E8XT1-W2, -W2M	300 ± 25	150 ± 15	None	None
EXXTX-G EXXTG-X EXXTG-G	Not Specified[e]			

NOTES:

a. In this table "X" before the letter "T" may be a 0 or 1 to indicate the primary welding position for which the electrode is designed (usability). See footnote b to Table 3 and section A2.

b. These temperatures are specified for testing under this specification and are not to be considered as recommendation for preheat and postweld heat treatment (PWHT) in production welding. The requirements for production welding must be determined by the user.
The schedule for PWHT for classification testing is as follows:
Raise to required temperature at a rate not exceeding 500°F (280°C) per hour, hold at required temperature for 1 hour, furnace cool to 600°F (315°C) at a rate not exceeding 350°F (195°C) per hour, air cool.

c. PWHT temperatures in excess of 1150°F (620°C) will decreases the impact value.

d. Held at specified temperature for two hours. Furnace cool at a rate not exceeding 100°F (55°C) per hour to 1100°F (595°C). Remove from furnace and air cool. These compositions are air hardening.

e. See Table 1, Note b.

of Carbon Steel, Low-Alloy Steel, Silicon Electrical Steel, Ingot Iron, and Wrought Iron.

10.4 The results of the analysis shall meet the requirements of Table 4 for the classification of electrode under test.

11. Radiographic Test

11.1 The groove weld described in 9.4.1 and shown in Fig. 2 shall be radiographed to evaluate the soundness of the weld metal. In preparation for radiography, the backing shall be removed and both surfaces of the weld shall be machined or ground smooth and flush with the original surfaces of the base metal. Both surfaces of the test assembly, in the area of the weld, shall be smooth enough to avoid difficulty in interpreting the radiograph.

11.2 The weld shall be radiographed in accordance with ASTM E 142, *Standard Test Methods for Controlling Quality of Radiographic Testing*. The quality level of inspection shall be 2-2T.

11.3 The soundness of the weld metal meets the requirements of this specification if the radiograph shows no cracks, no incomplete fusion, and no rounded indications in excess of the largest size or numbers permitted by the radiographic standards in Fig. 4. One inch (25 mm) of the weld measured from each end of the assembly shall be excluded from the radiographic evaluation.

11.3.1 A rounded indication is an indication (on the radiograph) whose length is no more than three times its width. Rounded indications may be circular, elliptical, conical, or irregular in shape, and they may have tails. The size of a rounded indication is the largest dimension of the indication, including any tail that may be present. The indication may be porosity or slag. Indications where the largest dimension does not exceed $\frac{1}{64}$ in. (0.4 mm) shall be disregarded. Test assemblies with indications larger than the largest indications permitted in the radiographic standards (Fig. 4) do not meet the requirements of this specification.

12. Tension Test

12.1 One all-weld-metal round tensile specimen, as specified in the Tension Tests section of ANSI/AWS B4.0, *Standard Methods for Mechanical Testing of Welds*, shall be machined from the groove weld described in 9.4 and shown in Fig. 2A. The tensile specimen shall have a nominal diameter of 0.500 in. (12.5 mm) and a nominal gage length-to-diameter ratio of 4:1.

12.2 For classifications shown in the as-welded condition in Table 2, the specimen, after machining, but before testing, may be aged at 200 to 220°F (90 to 104°C) for up to 48 hours, then allowed to cool to room temperature. Refer to A8.3 for a discussion on the purpose of aging.

12.3 After cooling, the specimen shall be tested in the manner described in the tension test section of ANSI/AWS B4.0, *Standard Methods for Mechanical Testing of Welds.*

12.4 The results of the all-weld-metal tension test shall meet the requirements specified in Table 1.

13. Impact Test

13.1 For those classifications for which impact testing is specified in Table 2, five Charpy V-notch impact specimens, as specified in the Fracture Toughness Testing of Welds section of ANSI/AWS B4.0, shall be machined from the test assembly shown in Fig. 2.

The Charpy V-notch specimens shall have the notched surface and the surface to be struck parallel within 0.002 in. (0.005 mm). The other two surfaces shall be square with the notched or struck surface within ±10 minutes of a degree. The notch shall be smoothly cut by mechanical means and shall be square with the longitudinal edge of the specimen within one degree.

The geometry of the notch shall be measured on at least one specimen in a set of five specimens. Measurement shall be done at a minimum 50 times magnification on either a shadowgraph or metallograph. The correct location of the notch shall be verified by etching before or after machining.

13.2 The five specimens shall be tested in accordance with the impact test section of ANSI/AWS B4.0. The test temperature shall be that specified in Table 2, for the classification under test. For those electrodes to be identified by the optional supplemental impact designator, "J," the test temperature shall be as specified in Note b of Table 2.

13.3 In evaluating the test results, the lowest and the highest values obtained shall be disregarded. Two of the remaining three values shall equal or exceed the specified 20 ft·lbf (27 J) energy level. One of the three may be lower, but not lower than 15 ft·lbf (20 J), and the average of the three shall be not less than the required 20 ft·lbf (27 J) energy level.

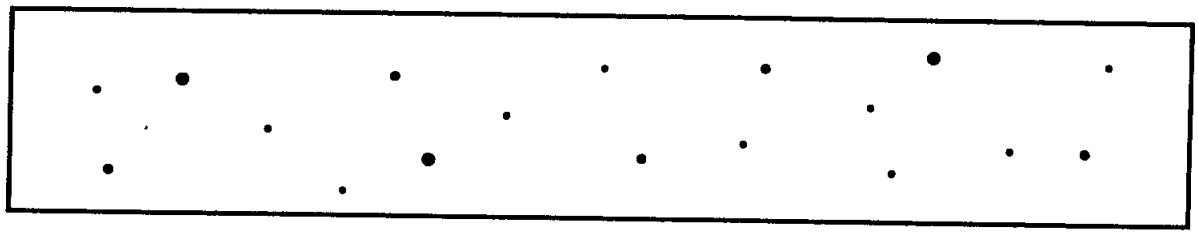

(A) ASSORTED ROUNDED INDICATIONS

SIZE 1/64 TO 1/16 in. [0.4 TO 1.6 mm] IN DIAMETER OR IN LENGTH. MAXIMUM NUMBER OF INDICATIONS IN ANY 6 in. [152 mm] OF WELD = 18, WITH THE FOLLOWING RESTRICTIONS:

MAXIMUM NUMBER OF LARGE 3/64 TO 1/16 in. [1.2 TO 1.6 mm] DIAMETER AND/OR LENGTH INDICATIONS = 3.
MAXIMUM NUMBER OF MEDIUM 1/32 TO 3/64 in. [0.8 TO 1.2 mm] DIAMETER AND/OR LENGTH INDICATIONS = 5.
MAXIMUM NUMBER OF SMALL 1/64 TO 1/32 in. [0.4 TO 0.8 mm] DIAMETER AND/OR LENGTH INDICATIONS = 10.

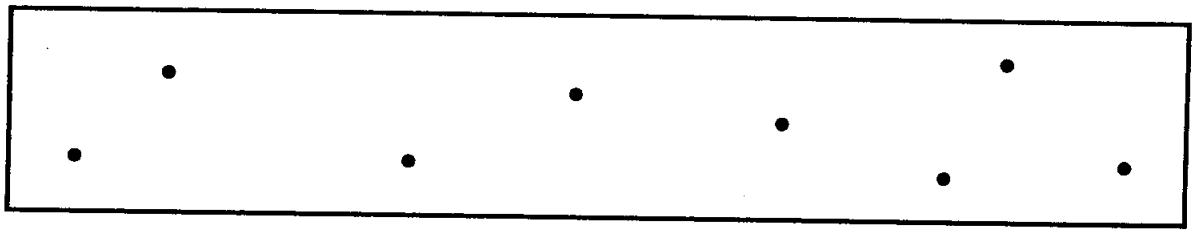

(B) LARGE ROUNDED INDICATIONS

SIZE 3/64 TO 1/16 in. [1.2 TO 1.6 mm] IN DIAMETER AND/OR LENGTH.
MAXIMUM NUMBER OF INDICATIONS IN ANY 6 in. [152 mm] OF WELD = 8.

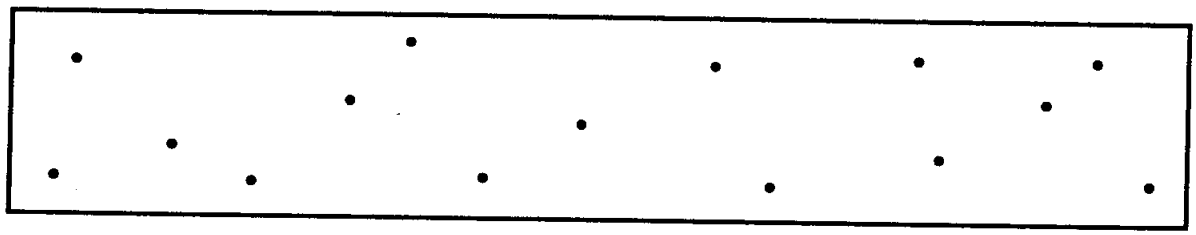

(C) MEDIUM ROUNDED INDICATIONS

SIZE 1/32 TO 3/64 in. [0.8 TO 1.2 mm] IN DIAMETER AND/OR LENGTH.
MAXIMUM NUMBER OF INDICATIONS IN ANY 6 in. [152 mm] OF WELD = 15.

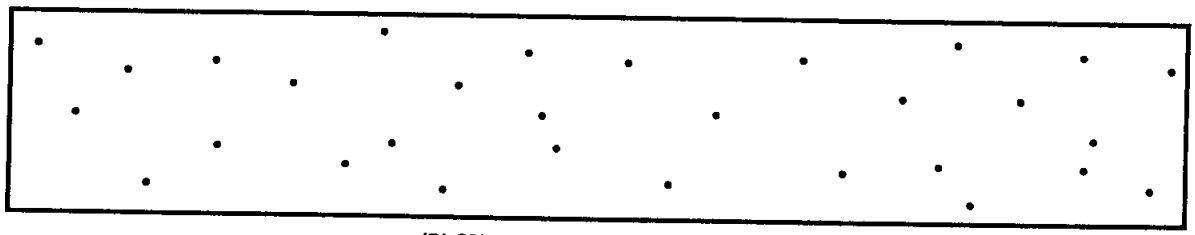

(D) SMALL ROUNDED INDICATIONS

SIZE 1/64 TO 1/32 in. [0.4 TO 0.8 mm] IN DIAMETER AND/OR LENGTH.
MAXIMUM NUMBER OF INDICATIONS IN ANY 6 in. [152 mm] OF WELD = 30.

GENERAL NOTES:

1. In using these standards, the chart which is most representative of the size of the rounded indications present in the test specimen radiograph shall be used for determining conformance to these radiographic standards.
2. Since these are test welds specifically made in the laboratory for classification purposes, the radiographic requirements for these test welds are more rigid than those which may be required for general fabrication.
3. Indications where the largest dimension does not exceed $^{1}/_{64}$ in. (0.4 mm) diameter and/or length shall be disregarded.

FIG. 4 RADIOGRAPHIC STANDARDS FOR TEST ASSEMBLY IN FIG. 2

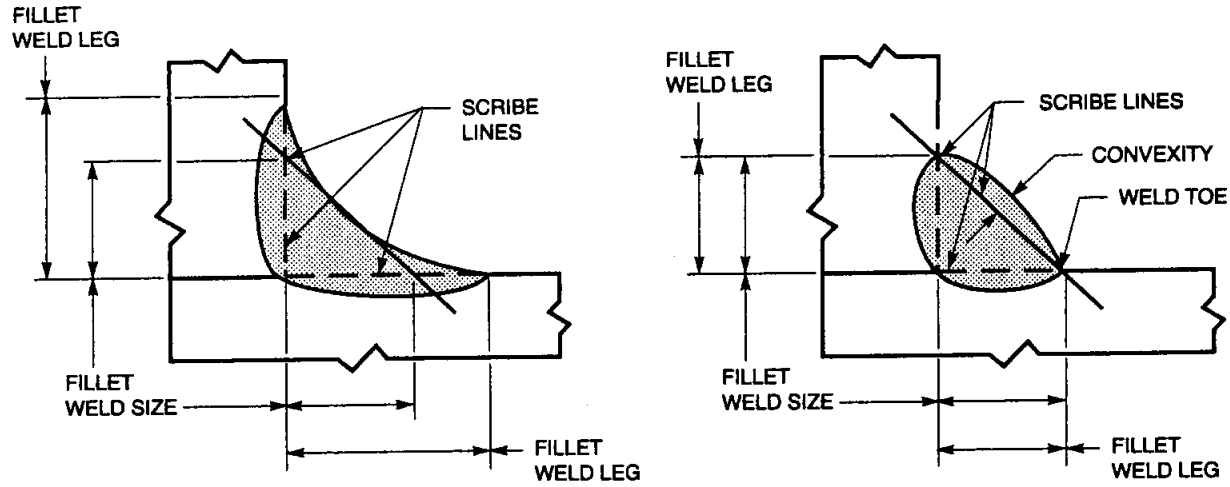

GENERAL NOTES:
1. Fillet weld size is the leg lengths of the largest isosceles right triangle which can be inscribed within the fillet weld cross-section.
2. Convexity is the maximum distance from the face of a convex fillet weld perpendicular to a line joining the weld toes.
3. Fillet weld leg is the distance from the joint root to the toe of the fillet weld.

FIG. 5 DIMENSIONS OF FILLET WELDS

14. Fillet Weld Test

14.1 The required fillet welds shall be made in accordance with 9.5 and Fig. 3, and shall be examined visually over the entire face of each weld. There shall be no indication of cracks, and the weld shall be reasonably free of undercut, overlap, trapped slag, and surface porosity. After the visual examination, a specimen containing approximately 1 in. (25 mm) of the length of the weld shall be removed as shown in Fig. 3. One cross-sectional surface of the specimen shall be polished and etched, and then examined as required in 14.2

14.2 Scribe lines shall be placed on the prepared surface, as shown in Fig. 5, and the fillet weld size, fillet weld legs, and convexity of the weld shall be determined to the nearest $^1/_{64}$ in. (0.4 mm) by actual measurement. These measurements shall meet the requirements specified in Table 9.

14.3 The remaining two sections of the test assembly shall be broken longitudinally through the fillet weld by a force exerted as shown in Fig. 3. When necessary, to facilitate fracture through the fillet, one or more of the following procedures may be used:

(a) A reinforcing bead, as shown in Fig. 6A, may be added to each leg of the weld.

(b) The position of the web on the flange may be changed, as shown in Fig. 6B.

(c) The face of the fillet may be notched, as shown in Fig. 6C.

Tests in which the weld metal pulls out of the base metal during bending are invalid tests. Specimens in which this occurs shall be replaced, specimen for specimen, and the test completed. In this case, the doubling of specimens required for retest in Section 8, Retest, does not apply.

14.4 The fractured surfaces shall be examined visually. They shall be free of cracks and shall be reasonably free of porosity and trapped slag. Incomplete fusion at the root of the weld shall not exceed 20 percent of the total length of the weld. Slag beyond the vertex of the isosceles triangle with the hypotenuse as the base, as shown in Fig. 5, shall not be considered incomplete fusion.

15. Diffusible Hydrogen Test

15.1 The smallest and largest size of an electrode to be identified by an optional supplemental diffusible hydrogen designator shall be tested according to one of the methods given in ANSI/AWS A4.3, *Standard Methods for Determination of the Diffusible Hydrogen*

TABLE 9
DIMENSIONAL REQUIREMENTS FOR FILLET WELD USABILITY TEST SPECIMENS

Measured Fillet Weld Size		Maximum Convexity[a]		Maximum Difference Between Fillet Weld Legs	
in.	mm	in.	mm	in.	mm
1/8	3.2	5/64	2.0	1/32	0.8
9/64	3.6	5/64	2.0	3/64	1.2
5/32	4.0	5/64	2.0	3/64	1.2
11/64	4.4	5/64	2.0	1/16	1.6
3/16	4.8	5/64	2.0	1/16	1.6
13/64	5.2	5/64	2.0	5/64	2.0
7/32	5.6	5/64	2.0	5/64	2.0
15/64	6.0	5/64	2.0	3/32	2.4
1/4	6.4	5/64	2.0	3/32	2.4
17/64	6.7	3/32	2.4	7/64	2.8
9/32	7.1	3/32	2.4	7/64	2.8
19/64	7.5	3/32	2.4	1/8	3.2
5/16	8.0	3/32	2.4	1/8	3.2
21/64	8.3	3/32	2.4	9/64	3.6
11/32	8.7	3/32	2.4	9/64	3.6
23/64	9.1	3/32	2.4	5/32	4.0
3/8	9.5	3/32	2.4	5/32	4.0

NOTE:
a. Maximum convexity for fillet welds made using EXXT5-X and EXXT5-XM electrodes may be 1/32 in. (0.8 mm) larger than the listed requirements.

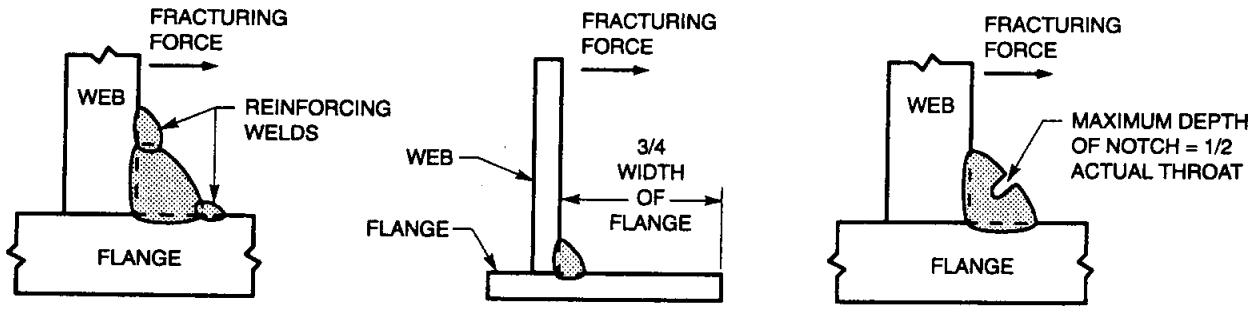

(A) REINFORCING WELDS (B) OFFSET OF WEB (C) NOTCHING

FIG. 6 ALTERNATE METHODS FOR FACILITATING FILLET WELD FRACTURE

TABLE 10
DIFFUSIBLE HYDROGEN LIMITS FOR WELD METAL[a]

AWS Classification	Optimal Supplemental Diffusible Hydrogen Designator[b, c, e]	Average Diffusible Hydrogen Content[d] mL (H_2)/100 g Deposited Metal
All except EXXT1-K9, -K9M	H16	16.0 max
All except EXXT1-K9, -K9M	H8	8.0 max
All except EXXT1-K9, -K9M	H4	4.0 max
EXXT1-K9, -K9M	None	8.0 max

NOTES:
a. Limits on diffusible hydrogen when tested in accordance with ANSI/AWS A4.3, *Standard Methods for Determination of the Diffusible Hydrogen Content of Martensitic, Bainitic, and Ferritic Steel Weld Metal Produced by Arc Welding,* as specified in Section 15.
b. See Annex Figure A1.
c. The lower diffusible hydrogen levels (H8 and H4) may not be available in some classifications (see Annex A8.2.8).
d. These hydrogen limits are based on welding in air containing a minimum of 10 grains of water per pound (1.43 g/kg) of dry air. Testing at any higher atmospheric moisture level is acceptable provided these limits are satisfied (see 15.3).
e. Electrodes which satisfy the diffusible hydrogen limits for the H4 category also satisfy the limits for the H8 and H16 categories. Electrodes which satisfy the diffusible hydrogen limits for the H8 category also satisfy the limits for the H16 category.

Content of Martensitic, Bainitic, and Ferritic Steel Weld Metal Produced by Arc Welding. Based upon the average value of test results which satisfy the requirements of Table 10, the appropriate diffusible hydrogen designator may be added at the end of the classification.

15.2 Testing shall be done with electrode in the "as-received" condition. Conditioning of the electrode prior to testing is not permitted. The use of electrical electrode extensions in excess of those which would be used in the routine application of the electrode is not permitted.

15.3 For purposes of certifying compliance with diffusible hydrogen requirements, the reference atmospheric condition shall be an absolute humidity of 10 grains of moisture per pound (1.43 g per kg) of dry air at the time of welding. The actual atmospheric conditions shall be reported along with the average value for the tests according to ANSI/AWS A4.3.

15.4 When the absolute humidity equals or exceeds the reference condition at the time of preparation of the test assembly, the test shall be acceptable as demonstrating compliance with the requirements of this specification, provided the actual test results satisfy the diffusible hydrogen requirements for the applicable designator, as specified in Table 10. Likewise, if the actual test results for an electrode meet the requirements for the lower or lowest hydrogen designator as specified in Table 10, the electrode also meets the requirements for all higher hydrogen designators in Table 10 without the need for retest.

PART C — MANUFACTURE, IDENTIFICATION, AND PACKAGING

16. Method of Manufacture

The electrodes classified according to this specification may be manufactured by any method that will produce electrodes that meet the requirements of this specification.

17. Standard Sizes

Standard sizes for filler metal in the different package forms (coils with support, coils without support, drums, and spools, see Section 19, Standard Package Forms), are shown in Table 11.

18. Finish and Uniformity

18.1 All electrodes shall have a smooth finish that is free from slivers, depressions, scratches, scale, seams, laps (exclusive of the longitudinal joint), and foreign matter that would adversely affect the welding characteristics, the operation of the welding equipment, or the properties of the weld metal.

TABLE 11
STANDARD SIZES AND TOLERANCES OF ELECTRODES[a]

AWS Classification	Electrode Size Diameter		Diameter Tolerance	
	in.	mm	in.	mm
All classifications	0.030	0.8	±0.002	±0.05
	0.035	0.9		
	0.045	1.2		
	0.052	1.3		
	1/16 (.062)	1.6		
All classifications	0.068	1.7	±0.003	±0.08
	0.072	1.8		
	5/64 (.078)	2.0		
	3/32 (.094)	2.4		
	7/64 (.109)	2.8		
	0.120	3.0		
	1/8 (.125)	3.2		
	5/32 (.156)	4.0		

NOTE:
a. Electrodes produced in sizes other than those shown may be classified by using similar tolerances.

18.2 Each continuous length of electrode shall be from a single lot of material, as defined in ANSI/AWS A5.01, and welds, when present, shall have been made so as not to interfere with the uniform, uninterrupted feeding of the electrode on automatic and semiautomatic equipment.

18.3 Core ingredients shall be distributed with sufficient uniformity throughout the length of the electrode so as not to adversely affect the performance of the electrode or the properties of the weld metal.

18.4 A suitable protective coating may be applied to any electrode in this specification.

19. Standard Package Forms

19.1 Standard package forms are coils with support, coils without support, spools, and drums. Standard package dimensions and weights for each form are given in Table 12 and Figs. 7, 8, and 9. Package forms, sizes, and weights other than these shall be as agreed by purchaser and supplier.

19.2 The liners in coils with support shall be designed and constructed to prevent distortion of the coil during normal handling and use and shall be clean and dry enough to maintain the cleanliness of the electrode.

19.3 Spools shall be designed and constructed to prevent distortion of the electrode during normal handling and use, and shall be clean and dry enough to maintain the cleanliness of the electrode.

20. Winding Requirements

20.1 Electrodes on spools and in coils (including drums) shall be wound so that kinks, waves, sharp bends, overlapping, or wedging are not encountered, leaving the electrode free to unwind without restriction. The outside end of the electrode (the end with which welding is to begin) shall be identified so it can be readily located and shall be fastened to avoid unwinding.

20.2 The cast and helix of the electrode in coils, spools, and drums shall be such that the electrode will feed in an uninterrupted manner in automatic and semiautomatic equipment.

21. Electrode Identification

21.1 The product information and the precautionary information required in Section 23 for marking each package, shall also appear on each coil, spool and drum.

21.2 Coils without support shall have a tag containing this information securely attached to the electrode at the inside of the coil.

21.3 Coils with support shall have the information securely affixed in a prominent location on the support.

21.4 Spools shall have the information securely affixed in a prominent location on the outside of at least one flange of the spool.

TABLE 12
PACKAGING REQUIREMENTS[a]

Type of Package	Package Size			Net Weight of Electrode[b]	
	in.	mm		lb	kg
Coils without supports	As specified by purchaser[c]			As specified by purchaser[c]	
Coils with support (see below)	$6\frac{3}{4}$	170	ID	14	6.4
	12	300	ID	25, 30, 50, & 60	11, 14, 23, & 27
Spools	4	100	OD	$1\frac{1}{2}$ & $2\frac{1}{2}$	0.7 & 1.1
	8	200	OD	10, 15, & 22	4.5, 6.8, & 10
	12	300	OD	25, 30, & 35	11, 14, & 16
	14	360	OD	50 & 60	23 & 27
	22	560	OD	250	110
	24	610	OD	300	140
	30	760	OD	600 & 750	270 & 340
Drums	$15\frac{1}{2}$	400	OD	As specified by purchaser[c]	
	20	500	OD	As specified by purchaser[c]	
	23	600	OD	300 & 600	140 & 300

Coils with Support — Standard Dimensions and Weight[a]

Electrode Size	Coil Net Weight[b]		Coil Dimensions			
			Inside Diameter of Liner		Width of Wound Electrode	
	lb	kg	in.	mm	in. (max)	mm (max)
All	All	6.4	$6\frac{3}{4} \pm \frac{1}{8}$	170 ± 3	3	75
	25 and 30	11 and 14	$12 \pm \frac{1}{8}$	305 ± 3	$2\frac{1}{2}$ or $4\frac{5}{8}$	65 or 120
	50 and 60	23 and 27	$12 \pm \frac{1}{8}$	305 ± 3	$4\frac{5}{8}$	120

NOTES:
a. Sizes and net weights other than those specified may be supplied as agreed beetween supplier and purchaser
b. Tolerance on net weight shall be ±10 percent.
c. As agreed between supplier and purchaser.

21.5 Drums shall have the information securely affixed in a prominent location on the outside of the drum.

22. Packaging

Electrodes shall be suitably packaged to ensure against damage during shipment and storage under normal conditions.

23. Marking of Packages

23.1 The following product information (as a minimum) shall be legibly marked so as to be visible from the outside of each unit package.

(a) AWS Specification and classification designation (year of issue may be excluded), along with applicable optional designators.

(b) Supplier's name and trade designation,

(c) Size and net weight,

(d) Lot, control, or heat number.

23.2 The following precautionary information (as a minimum) shall be prominently displayed in legible print on all packages of flux cored electrodes, including individual unit packages enclosed within a larger package.

WARNING:

PROTECT yourself and others. Read and understand this information.

FUMES AND GASES can be hazardous to your health.

ARC RAYS can injure eyes and burn skin.

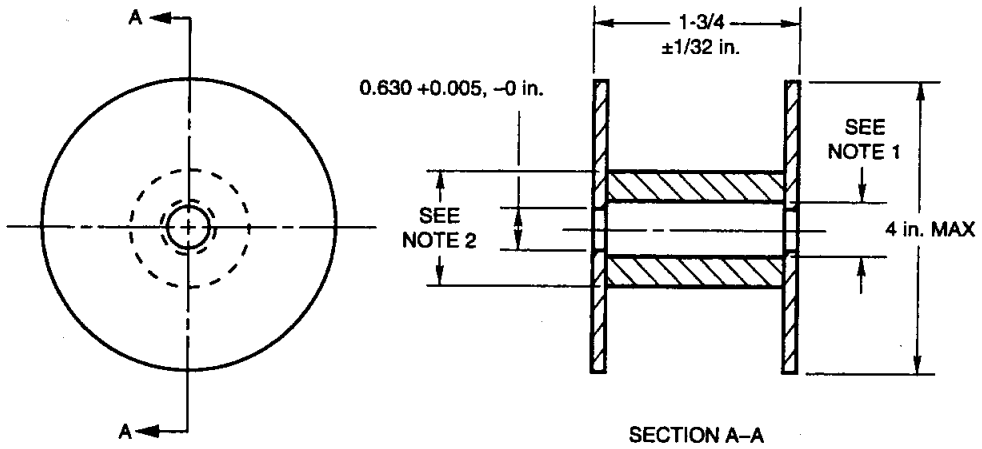

SI EQUIVALENTS	
in.	mm
0.005	0.13
1/32	0.8
0.630	16
1-3/4	44
4	100

NOTES:
1. The inside diameter of the barrel shall be such that swelling of the barrel or misalignment of the barrel and flanges will not result in the core of the spool being less than the inside diameter of the flanges.
2. The outside diameter of the barrel shall be such as to permit proper feeding of the electrode.

FIG. 7 DIMENSIONS OF STANDARD 4-IN. (100-MM) SPOOL

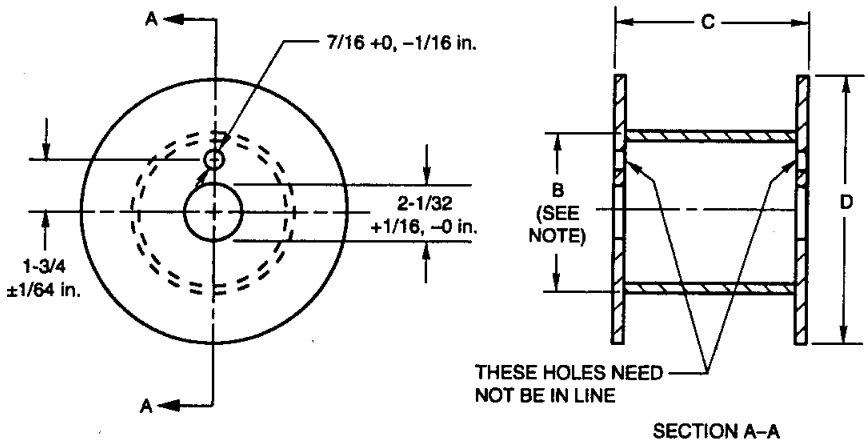

SI EQUIVALENTS	
in.	mm
1/64	0.4
1/16	1.6
7/16	11
1-3/4	44
2-1/32	52

Spool Size		C Dimension		D Dimension (maximum)	
in.	mm	in.	mm	in.	mm
8	200	2-5/32 ± 1/32	55 ± 1	8	205
8	200	2-7/8 ± 1/16	75 ± 2	8	205
12	300	4 ± 1/16	100 ± 2	12	305
14	350	4 ± 1/16	100 ± 2	14	305

NOTE:
1. Dimension B, outside diameter of barrel, shall be such as to permit proper feeding of the electrode.

FIG. 8 DIMENSIONS OF STANDARD 8, 12, AND 14-IN. (200, 300, AND 350-MM) SPOOLS

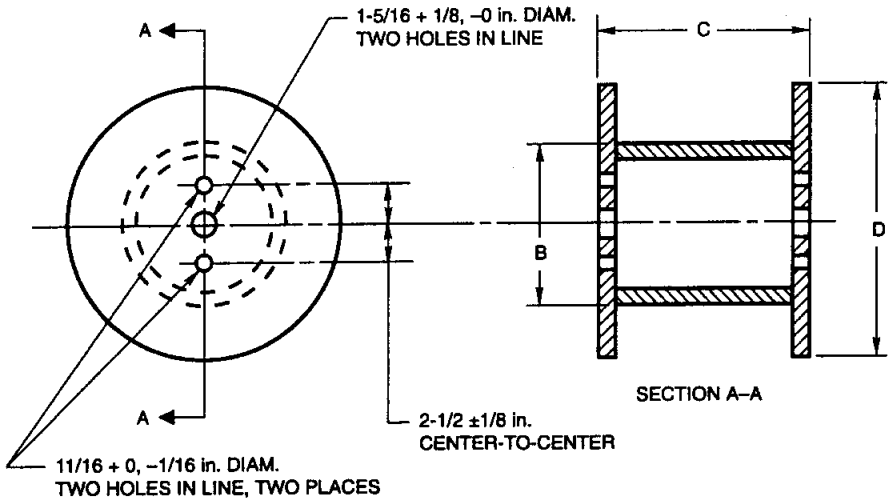

SI EQUIVALENTS	
in.	mm
1/16	1.6
1/8	3
11/16	18
1-5/16	33
2-1/2	63.5

Spool Size		Maximum D Dimension		Maximum C Dimension	
in.	mm	in.	mm	in.	mm
22	560	22	560	12	305
24	610	24	610	13-1/2	345
30	760	30	760	13-1/2	345

NOTE:
1. Dimension B, outside diameter of barrel, shall be such as to permit proper feeding of the electrode.

FIG. 9 DIMENSIONS OF 22, 24, AND 30-IN. (560, 610, AND 760-MM) SPOOLS

ELECTRIC SHOCK can KILL.

- Before use, read and understand the manufacturer's instructions, the Material Safety Data Sheets (MSDSs), and your employer's safety practices.
- Keep your head out of the fumes.
- Use enough ventilation, exhaust at the arc, or both, to keep fumes and gases away from your breathing zone and the general area.
- Wear correct eye, ear, and body protection.
- Do not touch live electrical parts.
- See American National Standard ANSI/ASC Z49.1, *Safety in Welding, Cutting, and Allied Processes,* published by the American Welding Society, 550 N.W. LeJeune Road, Miami, FL 33126; and OSHA Safety and Health Standards, *29 CFR 1910*, available from the U.S. Government Printing Office, Washington, DC 20402.

DO NOT REMOVE THIS INFORMATION

Annex
Guide to AWS Specification for Steel Electrodes for Flux Cored Arc Welding

(This Annex is not a part of ANSI/AWS A5.29-1998, *Specification for Low-Alloy Steel Electrodes for Flux Cored Arc Welding*, but is included for information only.)

A1. Introduction

The purpose of this guide is to correlate the electrode classifications with their intended applications so the specification can be used effectively. This guide provides examples rather than complete listings of the materials and applications for which each filler metal is suitable.

A2. Classification System

A2.1 The system for identifying the electrode classifications in this specification follows, for the most part, the standard pattern used in other AWS filler metal specifications. An illustration of this system is given in Fig. A1.

A2.2 Some of the classifications are intended to weld only in the flat and horizontal positions (E70T5-A1, for example). Others are intended for welding in all positions (E81T1-Ni1, for example). As in the case of covered electrodes, the smaller sizes of flux cored electrodes are the ones used for the out-of-position work. Flux cored electrodes larger than $^{5}/_{64}$ in. (2.0 mm) in diameter are usually used for horizontal fillets and flat position welding.

A2.3 Optional supplemental designators are also used in this specification in order to identify electrode classifications that have met certain supplemental requirements as agreed to between the supplier and the purchaser. The optional supplemental designators are not part of the classification nor of its designation.

A2.3.1 Many of the classifications included in this specification have requirements for impact testing at various test temperatures as shown in Table 2. In order to include products with improved weld-metal toughness at lower temperatures, an optional supplemental designator, J, has been added to identify classifications which, when tested, produce weld metal which exhibits 20 ft·lbf (27 J) at a temperature of 20°F (11°C) lower than the standard temperature shown in Table 2. Users are cautioned that although the improved weld-metal toughness will be evidenced when welding is performed under conditions similar to the test assembly preparation method specified in this specification, other applications of the electrode, such as long-term postweld heat treatment (PWHT) or uphill welding with higher heat input, may differ markedly from the improved toughness levels given. Users should always perform their own properties verification testing.

A2.3.2 This specification has included the use of optional designators for diffusible hydrogen (see Table 10 and A8.2) to indicate the maximum average value obtained under a clearly defined test condition in ANSI/AWS A4.3, *Standard Methods for Determination of the Diffusible Hydrogen Content of Martensitic, Bainitic, and Ferritic Steel Weld Metal Produced by Arc Welding*. Electrodes that are designated as meeting the lower or lowest hydrogen limits as specified in Table 10, also are understood to be able to meet any higher hydrogen limits when tested in accordance with Section 15. For example, see Note e of Table 10.

A2.4 "G" Classification

A2.4.1 This specification includes electrodes classified as EXXXTX-G, EXXXTG-G, and EXXXTG-X. The "G" indicates that the electrode is of a general classification. It is "general" because not all of the particular requirements specified for each of the other

Mandatory Classification Designators*

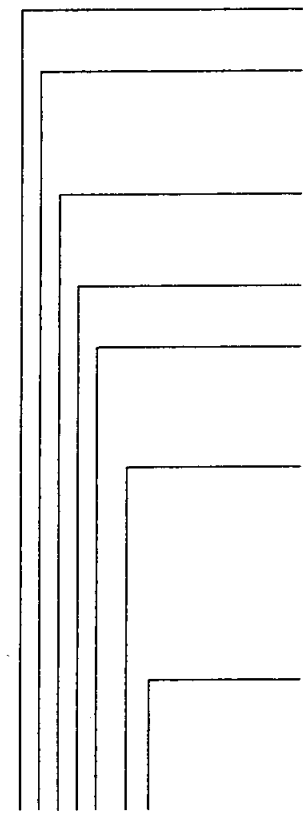

Designates an electrode.

This designator indicates the minimum tensile strength (in ksi ÷ 10) of the weld metal when the weld metal is made in the manner prescribed by this specification. (Two digits may be required.)

This designator is either 0 or 1. It indicates the positions of welding for which the electrode is intended. 0 is for the flat and horizontal positions only; 1 is for all positions.

This designator indicates that the electrode is a flux cored electrode.

This designator will be some number: 1, 4, 5, 6, 7, 8, 11, or the letter G. The number refers to the usability of the electrode (see A7). The G indicates that the slag system and shielding gas are not specified.

Designates the chemical composition of the deposited weld metal (see Table 4). Specific chemical compositions are not always identified with specific mechanical properties in the specification. A supplier is required by the specification to include the mechanical properties appropriate for a particular electrode in classification of that electrode. Thus, for example, a complete designation is E80T5-Ni3, EXXT5-Ni3 is not a complete classification. The letter G indicates that the chemical composition is not specified.

An "M" designator in this position indicates that the electrode is classified using 75–80 percent argon/bal CO_2 shielding gas. When the "M" designator does not appear, it signifies that either the shielding gas used for classification is CO_2, or that the electrode is a self shielded electrode.

Optional Supplemental Designators

Designates that the electrode meets the requirements of the diffusible hydrogen test (an optional supplemental test of the weld metal with an average value not exceeding "Z" mL of H2 per 100 g of deposited metal where "Z" is 4, 8, or 16). See Table 10 and A8.2.

Designates that the electrode meets the requirements for improved toughness by meeting a requirement of 20 ft·lbf [27 J] at a test temperature of 20°F [11°C] lower than the temperature shown for that classification in Table 2. Absence of the "J" indicates normal impact requirements as given in Table 2.

*The combination of these constitutes the electrode classification.

FIG. A1 CLASSIFICATION SYSTEM FOR LOW-ALLOY STEEL FLUX CORED ELECTRODES

classifications are specified for this classification. The intent, in establishing this classification, is to provide a means by which electrodes that differ in one respect or another (chemical composition, for example) from all other classifications (meaning that the composition of the weld metal — in the case of the example — does not meet the composition specified for any of the classifications in the specification) can still be classified according to the specification. The purpose is to allow a useful filler metal — one that otherwise would have to await a revision of the specification — to be classified immediately, under the existing specification. This means, then, that two electrodes — each bearing the same "G" classification — may be quite different in some certain respect (chemical composition, again, for example).

A2.4.2 The point of difference (although not necessarily the amount of the difference) referred to in A2.4.1 will be readily apparent from the use of the words "not required" and "not specified" in the specification. The use of these words is as follows:

(a) Not Specified is used in those areas of the specification that refer to the results of some particular test. It indicates that the requirements for that test are not specified for that particular classification.

(b) Not Required is used in those areas of the specification that refer to the tests that must be conducted in order to classify an electrode. It indicates that the test is not required because the requirements (results) for the test have not been specified for that particular classification. Restating the case, when a requirement is not specified, it is not necessary to conduct the corresponding test in order to classify an electrode to that classification. When purchasers want the information provided by that test in order to consider a particular product of that classification for a certain application, they will have to arrange for that information with the supplier of the product. They will have to establish with that supplier just what the testing procedure and the acceptance requirements are to be for that test. They may want to incorporate that information (via ANSI/AWS A5.01, *Filler Metal Procurement Guidelines*) in the purchase order.

A2.4.3 Request for Filler Metal Classification

(a) When a filler metal cannot be classified according to some classification other than a "G" classification, the manufacturer may request that a classification be established for that filler metal. The manufacturer may do this by following the procedure given here. When the manufacturer elects to use the "G" classification, the Filler Metals Committee recommends that the manufacturer still request that a classification be established for that filler metal, as long as the filler metal is of commercial significance.

(b) A request to establish a new filler metal classification must be a written request, and it needs to provide sufficient detail to permit the Filler Metals Committee or the Subcommittee to determine whether the new classification or the modification of an existing classification is more appropriate and whether either is necessary to satisfy the need. The request needs to state the variables and their limits for such a classification or modification. The request should contain some indication of the time by which completion of the new classification or modification is needed.

(c) The request should be sent to the Secretary of the Filler Metals Committee at AWS Headquarters. Upon receipt of the request, the Secretary will do the following:

(1) Assign an identifying number to the request. This number will include the date the request was received.

(2) Confirm receipt of the request and give the identification number to the person who made the request.

(3) Send a copy of the request to the Chair of the Committee on Filler Metals and the Chair of the particular Subcommittee involved.

(4) File the original request.

(5) Add the request to the log of outstanding requests.

(d) All necessary action on each request will be completed as soon as possible. If more than 12 months lapse, the Secretary shall inform the requestor of the status of the request, with copies to the Chairs of the Committee and of the Subcommittee. Requests still outstanding after 18 months shall be considered not to have been answered in a "timely manner" and the Secretary shall report these to the Chair of the Committee on Filler Metals for action.

(e) Secretary shall include a copy of the log of all requests pending and those completed during the preceding year with the agenda for each Committee on Filler Metals meeting. Any other publication of requests that have been completed will be at the option of the American Welding Society, as deemed appropriate.

A3. Acceptance

Acceptance of all welding materials classified under this specification is in accordance with ANSI/AWS A5.01, as the specification states. Any testing a pur-

chaser requires of the supplier, for material shipped in accordance with this specification, shall be clearly stated in the purchase order, according to the provisions of ANSI/AWS A5.01. In the absence of any such statement in the purchase order, the supplier may ship the material with whatever testing the supplier normally conducts on material of that classification, as specified in Schedule F, Table 1, of the ANSI/AWS A5.01. Testing in accordance with any other schedule in that table must be specifically required by the purchase order. In such cases, acceptance of the material shipped will be in accordance with those requirements.

A4. Certification

The act of placing the AWS Specification and Classification designations on the packaging enclosing the product, or the classification on the product itself, constitutes the supplier's (manufacturer's) certification that the product meets all of the requirements of the specification.

The only testing requirement implicit in this certification is that the manufacturer has actually conducted the tests required by the specification on material that is representative of that being shipped and that the material met the requirements of the specification. Representative material, in this case, is any production run of that classification using the same formulation. Certification is not to be construed to mean that tests of any kind were necessarily conducted on samples of the specific material shipped. Tests on such material may or may not have been conducted. The basis for the "certification" required by the specification is the classification test of "representative material" cited above, and the "Manufacturer's Quality Assurance System" in ANSI/AWS A5.01.

A5. Ventilation During Welding

A5.1 Five major factors govern the quantity of fumes in the atmosphere to which welders and welding operators are exposed during welding. These are the following:

(a) Dimensions of the space in which welding is done (with special regard to the height of the ceiling)

(b) Number of welders and welding operators working in that space

(c) Rate of evolution of fumes, gases, or dust, according to the materials and processes used

(d) The proximity of the welders or welding operators to the fumes as the fumes issue from the welding zone, and to the gases and dusts in the space in which they are working

(e) The ventilation provided to the space in which the welding is done

A5.2 American National Standard Z49.1, *Safety in Welding, Cutting, and Allied Processes* (published by the American Welding Society), discusses the ventilation that is required during welding and should be referred to for details. Attention is drawn particularly to the sections of that document entitled "Protection of Personnel and the General Area and Ventilation."

A6. Welding Considerations

A6.1 When examining the properties required of weld metal as a result of the tests made according to this specification, it should be recognized that in production, where the conditions and procedures may differ from those in this specification (electrode size, amperage, voltage, type and amount of shielding gas, position of welding, electrode extension, plate thickness, joint geometry, preheat and interpass temperatures, travel speed, surface condition, base-metal composition and dilution, for example), the properties of the weld metal may also differ. Moreover, that difference may be large or small.

A6.2 Since it has not been possible to specify one single detailed welding procedure for all products classified under any given classification in this specification, details of the welding procedure used in classifying each product should be recorded by the manufacturer and made available to the user, on request. The information should include each of the items referred to in A6.1, as well as the actual number of passes and layers required to complete the weld test assembly.

A6.3 The toughness requirements for the different classifications in this specification can be used as a guide in the selection of electrodes for applications requiring some degree of low-temperature notch toughness. For an electrode of any given classification, there can be a considerable difference between the impact test results from one assembly to another, or even from one impact specimen to another, unless particular attention is given to the manner in which the weld is made and prepared (even the location and orientation of the specimen within the weld), the temperature of testing, and the operation of the testing machine.

A6.4 Hardenability. There are inherent differences in the effect of the carbon content of the weld deposit on hardenability, depending on whether the electrode

was gas shielded or self-shielded. Gas shielded electrodes generally employ a Mn-Si deoxidation system. The carbon content affects hardness in a manner which is typical of many carbon equivalent formulas published for carbon steel.

Most self-shielded electrodes utilize an aluminum-based alloy system to provide for protection and deoxidation. One of the effects of the aluminum is to modify the effect of carbon on hardenability. Hardness levels obtained with self-shielded electrodes will therefore be lower than the carbon content would indicate (when considered on the basis of typical carbon equivalent formulas).

A7. Description and Intended Use of Flux Cored Electrode Classifications

This specification contains many different classifications of flux cored electrodes. The suffix in each classification (1, 4, 5, 6, 7, 8, 11, or G), indicates a general grouping of electrodes that contain similar flux or core components and which have similar usability characteristics, except for the "G" classification where usability characteristics may differ between similarly classified electrodes.

The steels commonly welded with low-alloy electrodes are usually used for specific purposes. The welding of these steels requires an understanding of their properties and heat treatment beyond that which could be covered in an annex to an electrode specification. Users not familiar with the characteristics of low-alloy steels are referred to Vol. 4, *Welding Handbook*, 7th Edition, and other publications on low-alloy steels.

A7.1 EXXT1-X and EXXT1-XM Classifications. Electrodes of the EXXT1-X group are classified with CO_2 shielding gas. However, other gas mixtures (such as argon-CO_2) may be used to improve usability, especially for out-of-position applications, when recommended by the manufacturer. Increasing the amount of argon in the argon-CO_2 mixture will increase the manganese and silicon contents, along with certain other alloys such as chromium, in the weld metal. The increase in manganese, silicon, or other alloys will increase the yield and tensile strengths and may affect impact properties.

Electrodes in the EXXT1-XM group are classified with 75 to 80 percent argon/balance CO_2 shielding gas. Their use with argon-CO_2 shielding gas mixtures having reduced amounts of argon or with CO_2 shielding gas may result in some deterioration of arc characteristics and out-of-position welding characteristics. In addition, a reduction of manganese, silicon, and certain other alloy contents in the weld metal, will reduce yield and tensile strengths and may affect impact properties.

Both the EX1T1-X and EX1T1-XM electrodes are designed for single and multipass welding using DCEP polarity. The larger diameters (usually $^5/_{64}$ in. [2.0 mm] and larger) are used for welding in the flat position and for welding fillet welds in the horizontal position (EX0T1-X and EX0T1-XM). The smaller diameters (usually $^1/_{16}$ in. [1.6 mm] and smaller) are used for welding in all positions (EX1T1-X and EX1T1-XM). The EX1T1-X and EXTT1-XM electrodes are characterized by a spray transfer, low spatter loss, flat to slightly convex bead contour, and a moderate volume of slag, which completely covers the weld bead. Electrodes of this classification have a rutile base slag and produce high deposition rates.

A7.2 EX0T4-X Classification. Electrodes of this classification are self-shielded, operate on DCEP, and have a globular-type transfer. The slag system is designed to make very-high deposition rates possible and to produce a weld that is very low in sulfur, which makes the weld very resistant to hot cracking. These electrodes are designed for low penetration beyond the root of the weld, enabling them to be used on joints which have been poorly fit and for single and multipass welding.

A7.3 EXXT5-X and EXXT5-XM Classifications. Electrodes of the EXXT5-X classifications are designed to be used with CO_2 shielding gas; however, as with the EXXT1-X classifications, argon-CO_2 mixtures may be used to reduce spatter, when recommended by the manufacturer. Increasing the amount of argon in the argon-CO_2 mixture will increase the manganese and silicon contents, along with certain other alloys, which will increase the yield and tensile strengths and may affect impact properties.

Electrodes of the EXXT5-XM classification are designed for use with 75 to 80 percent argon/balance CO_2 shielding. Their use with gas mixtures having reduced amounts of argon or with CO_2 shielding gas will result in some deterioration in arc characteristics, an increase in spatter, and a reduction in manganese, silicon, and certain other alloy elements in the weld metal. This reduction in manganese, silicon, or other alloys will decrease the yield and tensile strengths and may affect impact properties.

Electrodes of the EX0T5-X and EX0T5-XM classifications are used primarily for single-pass and multipass welds in the flat position and for welding fillet welds in the horizontal position using DCEP or DCEN, depending on the manufacturer's recommendation. These electrodes are characterized by a globular transfer,

slightly convex bead contour, and a thin slag that may not completely cover the weld bead. These electrodes have a lime-fluoride base slag. Weld deposits produced by these electrodes typically have impact properties and hot and cold crack resistance that are superior to those obtained with rutile base slags. The EX1T5-X and EX1T5-XM electrodes, using DCEN, can be used for welding in all positions. However, the operator appeal of these electrodes is not as good as that of those with rutile base slags.

A7.4 EXXT6-X Classification. Electrodes of this classification are self-shielded, operate on DCEP, and have a spray-type transfer. The slag system is designed to give good low-temperature impact properties, good penetration into the root of the weld, and excellent slag removal, even in a deep groove. These electrodes are used for single-pass and multipass welding in flat and horizontal positions.

A7.5 EXXT7-X Classification. Electrodes of this classification are self-shielded, operate on DCEN and have a small droplet to spray-type transfer. The slag system is designed to allow the larger sizes to be used for high deposition rates in the horizontal and flat positions, and to allow the smaller sizes to be used for all welding positions. The electrodes are used for single-pass and multipass welding and produce very-low sulfur weld metal, which is very resistant to hot cracking.

A7.6 EXXT8-X Classification. Electrodes of this classification are self-shielded, operate on DCEN, and have a small droplet or spray-type transfer. These electrodes are suitable for all welding positions, and the weld metal has very good low-temperature notch toughness and crack resistance. These electrodes are used for single-pass and multipass welds.

A7.7 EXXT11-X Classification. Electrodes of this classification are self-shielded, operate on DCEN, and have a smooth spray-type transfer. The electrodes are intended for single-pass and multipass welding in all positions. The manufacturer should be consulted regarding any plate thickness limitations.

A7.8 EXXTX-G, EXXTG-X, and EXXTG-G Classifications. These classifications are for multiple-pass electrodes that are not covered by any presently defined classification. The mechanical properties can be anything covered by this specification. Requirements are established by the digits chosen to complete the classification. Placement of the "G" in the classification designates that the alloy requirements, shielding gas/slag system, or both are not defined and are as agreed upon between supplier and purchaser.

A7.9 Chemical Composition. The chemical composition of the weld metal produced is often the primary consideration for electrode selection. The suffixes, which are part of each alloy electrode classification, identify the chemical composition of the weld metal produced by the electrode. The following paragraphs give a brief description of the classifications, intended uses, and typical applications.

A7.9.1 EXXTX-A1 (C-Mo Steel) Electrodes. These electrodes are similar to the E7XT-X carbon-steel electrodes classified in ANSI/AWS A5.20, *Specification for Carbon Steel Electrodes for Flux Cored Arc Welding*, except that ½ percent molybdenum has been added. This addition increases the strength of the weld metal, especially at elevated temperatures and provides some increase in corrosion resistance; however, it may reduce the notch toughness of the weld metal. This type of electrode is commonly used in the fabrication and erection of boilers and pressure vessels. Typical applications include the welding of C-Mo steel base metals such as ASTM A 161, A 204 and A 302 Gr. A plate, and A 335-P1 pipe.

A7.9.2 EXXTX-BX, EXXTX-BXL and EXXTX-BXH (Cr-Mo Steel) Electrodes. These electrodes produce weld metal that contains between ½ percent and 9 percent chromium, and between ½ percent to 1 percent molybdenum. They are designed to produce weld metal for high-temperature service and for matching the properties of the typical base metals as follows:

(a) EXXTX-B1 — ASTM A 335-P2 pipe
(b) EXXTX-B1 — ASTM A 387 Gr. 2 plate
(c) EXXTX-B2 — ASTM A 335-P11 pipe
(d) EXXTX-B2 — ASTM A 387 Gr. 11 plate
(e) EXXTX-B2L — Thin-wall A 335-P11 pipe or tube for use in the as-welded condition or for applications where low hardness is a primary concern.
(f) EXXTX-B3 — ASTM A 335-P22 pipe
(g) EXXTX-B3 — ASTM A 387 Gr. 22 plate
(h) EXXTX-B3L — Thin-wall ASTM A 335-P22 pipe for use in the as-welded condition or for applications where lower hardness is of primary concern.
(i) EXXTX-B6 — ASTM A 213-T5 tube
(j) EXXTX-B6 — ASTM A 335-P5 pipe
(k) EXXTX-B8 — ASTM A 213-T9 tube
(l) EXXTX-B8 — ASTM A 335-P9 pipe

For two of these Cr-Mo electrode classifications, low-carbon EXXTX-BXL classifications have been established. While regular Cr-Mo electrodes produce weld metal with 0.05 percent to 0.12 percent carbon, the

"L-Grades" are limited to a maximum of 0.05 percent carbon. While the lower percent carbon in the weld metal will improve ductility and lower hardness; it will also reduce the high-temperature strength and creep resistance of the weld metal.

Several of these grades also have had high-carbon grades (EXXTX-BXH) established. In these cases, the electrode produces weld metal with 0.10 percent to 0.15 percent carbon which may be required for high-temperature strength in some applications.

Since all Cr-Mo electrodes produce weld metal which will harden in still air, both preheat and postweld heat treatment (PWHT) are required for most applications.

No minimum notch toughness requirements have been established for any of the Cr-Mo electrode classifications. While it is possible to obtain Cr-Mo electrodes with minimum toughness values at ambient temperatures down to 32°F (0°C), specific values and testing must be agreed to by the supplier and the purchaser.

A7.9.3 EXXTX-DX (Mn-Mo Steel) Electrodes. These electrodes produce weld metal which contains about 1-½ percent to 2 percent manganese and between ⅓ percent and ⅔ percent molybdenum. This weld metal provides higher strength and better notch toughness than the C½ percent Mo and 1 percent Ni-½ percent Mo steel weld metal discussed in A7.9.1 and A7.9.4. However, the weld metal from these Mn-Mo steel electrodes is quite air-hardenable and usually requires preheat and PWHT. The individual electrodes classified under this electrode group have been designed to match the mechanical properties and corrosion resistance of the high-strength, low-alloy pressure vessel steels, such as ASTM A 302 Gr. B and HSLA steels and manganese molybdenum castings such as ASTM A 49, A 291 and A 735.

A7.9.4 EXXTX-K(X) (Various Low-Alloy Steel Type) Electrodes. This group of electrodes produces weld metal of several different chemical compositions. These electrodes are primarily intended for as-welded applications. See Table 2 for a comparison of the toughness levels obtained for each classification.

A7.9.4.1 EXXTX-K1 Electrodes. Electrodes of this classification produce weld metal with nominally 1 percent nickel and ½ percent molybdenum. These electrodes can be used for long-term stress-relived applications or for welding low-alloy, high-strength steels, in particular 1 percent nickel.

A7.9.4.2 EXXTX-K2 Electrodes. Electrodes in this classification produce weld metal which will have a chemical composition of 1-½ percent nickel and up to 0.35 percent molybdenum. These electrodes are used on many high-strength applications ranging from 80 to 110 ksi (550 to 760 MPa) minimum yield strength. Typical applications would include the welding of submarines, aircraft carriers, and many structural applications where excellent low-temperature toughness is required. Steels welded would include HY-80, HY-100, ASTM A 710, A 514, and other similar high-strength steels.

A7.9.4.3 EXXTX-K3 Electrodes. Electrodes of this type produce weld deposits with higher levels of Mn, Ni, and Mo than the EXXTX-K2 types. They are usually higher strength than the -K1 and -K2 types. Typical applications include the welding of HY-100 and A 514 steels.

A7.9.4.4 EXXTX-K4 Electrodes. Electrodes of this classification deposit weld metal similar to that of the -K3 electrodes, with the addition of approximately 0.5 percent chromium. The additional alloy provides the higher strength needed for many applications needing in excess of 120 000 psi (830 MPa) tensile, such as armor plate.

A7.9.4.5 EXXTX-K5 Electrodes. Electrodes of this classification produce weld metal which is designed to match the mechanical properties of steels such as SAE 4130 and 8630 after the weldment is quenched and tempered. The classification requirements stipulate only as welded mechanical properties; therefore, the end user is encouraged to perform qualification testing.

A7.9.4.6 EXXTX-K6 Electrodes. Electrodes of this classification produce weld metal which utilizes less than 1 percent nickel to achieve excellent toughness in the 60 000 and 70 000 psi (410–480 MPa) tensile-strength ranges. Applications include structural, offshore construction, and circumferential pipe welding.

A7.9.4.7 EXXTX-K7 Electrodes. This electrode classification produces weld metal which has similarities to that produced with EXXTX-Ni2 and EXXTX-Ni3 electrodes. This weld metal has approximately 1-½ percent manganese and 2-½ percent nickel.

A7.9.4.8 EXXTX-K8 Electrodes. This classification was designed for electrodes intended for use in circumferential girth welding of line pipe. The weld deposit contains approximately 1-½ percent manganese, 1.0 percent nickel, and small amounts of other alloys. It is especially intended for use on API 5LX80 pipe steels.

A7.9.4.9 EXXT1-K9 Electrodes. This electrode produces weld metal similar to that of the -K2 and

-K3 type electrodes, but is intended to be similar to the military requirements of MIL-101TM and 101TC electrodes in MIL-E-24403/2C. The electrode is designed for welding HY-80 steel.

A7.9.5 EXXTX-NiX (Ni-Steel) Electrodes. These electrodes have been designed to produce weld metal with increased strength without being air-hardenable or with increased notch toughness at temperatures as low as −100°F (−73°C). They have been specified with nickel contents which fall into three nominal levels of 1 percent Ni, 2-¼ percent Ni, and 3-¼ percent Ni in steel.

With carbon levels of up to 0.12%, strength increases and permits some of these Ni-steel electrodes to be classified as E8XTX-NiX and E9XTX-NiX. However, some classifications may produce low-temperature notch toughness to match the base-metal properties of nickel steels, such as ASTM A 203 Gr. A, ASTM A 352 Grade LC1 and LC2. The manufacturer should be consulted for specific Charpy V-notch impact properties. Typical base metals would also include ASTM A 302, A 572, A 575, and A 734.

Many low-alloy steels require postweld heat treatment to stress relieve the weld or temper the weld metal and heat-affected zone (HAZ) to achieve increased ductility. It is often acceptable to exceed the PWHT holding temperatures shown in Table 8. However, for many applications, nickel-steel weld metal can be used without (PWHT). If PWHT is to be specified for a nickel-steel weldment, the holding temperature should not exceed the maximum temperature given in Table 8 for the classification considered, since nickel steels can be embrittled at higher temperatures.

Electrodes of the EXXTX-Ni(X) type are often used in structural applications where excellent toughness (Charpy V-notch or CTOD) is required.

A7.9.6 EXXTX-WX (Weathering Steel) Electrodes. These electrodes have been designed to produce weld metal that matches the corrosion resistance and the coloring of the ASTM weathering-type structural steels. These special properties are achieved by the addition of about ½ percent copper to the weld metal. To meet strength, ductility, and notch toughness in the weld metal, some chromium and nickel additions are also made. These electrodes are used to weld typical weathering steel, such as ASTM A 242 and A 588.

A7.9.7 EXXTX-G (General Low-Alloy Steel) Electrodes. These electrodes are described in A2.4. These electrode classifications may be either modifications of other discrete classifications or totally new classifications. The purchaser and user should determine the description and intended use of the electrode from the supplier.

A8. Special Tests

A8.1 It is recognized that supplementary tests may need to be conducted to determine the suitability of these welding electrodes for applications involving properties such as hardness, corrosion resistance, mechanical properties at higher or lower service temperatures, wear resistance, and suitability for welding combinations of dissimilar metals. Supplemental requirements as agreed between purchaser and supplier may be added to the purchase order following the guidance of ANSI/AWS A5.01.

A8.2 Diffusible Hydrogen Test

A8.2.1 Hydrogen-induced cracking of weld metal or the HAZ generally is not a problem with carbon steels containing 0.3 percent or less carbon, nor with lower-strength alloy steels. However, the electrodes classified in this specification are used to join higher-carbon steels or low-alloy, high-strength steels where hydrogen-induced cracking may be a serious problem.

A8.2.2 Most flux cored electrodes deposit weld metal having diffusible hydrogen levels of less than 16 mL/100 grams of deposited metal. For that reason, flux cored electrodes are generally considered to be low hydrogen. However, some commercially available products will, under certain conditions, produce weld metal with diffusible hydrogen levels in excess of 16 mL/100 grams of deposited metal. Therefore, it may be appropriate for certain applications to utilize the optional supplemental designators for diffusible hydrogen when specifying the flux cored electrode to be used.

A8.2.3 The user of this information is cautioned that actual fabrication conditions may result in different diffusible hydrogen values than those indicated by the designator.

A8.2.4 The use of a reference atmospheric condition during welding is necessitated because the arc is subject to atmospheric contamination when using either self-shielded or gas shielded flux cored electrodes. Moisture from the air, distinct from that in the electrode, can enter the arc and subsequently the weld pool, contributing to the resulting observed diffusible hydrogen. This effect can be minimized by maintaining as short an arc length as possible consistent with a steady arc. Experience has shown that the effect of arc length is minor at the H16 level, but can be very significant at the H4 level. An electrode meeting the H4 require-

ments under the reference atmospheric conditions may not do so under conditions of high humidity at the time of welding, especially if a long arc length is maintained.

A8.2.5 Electrode extension also affects diffusible hydrogen with flux cored electrodes. In general, a longer electrode extension will preheat the electrode more, which causes some removal of hydrogen-bearing compounds (moisture and lubricants) before they reach the arc. The result of longer electrode extension can be reduced diffusible hydrogen. However, excessive electrode extension with external gas shielded electrodes may cause some loss of gas shielding unless the contact tip is recessed in the gas cup. If the gas shielding is disturbed, more air may enter the arc and increase the diffusible hydrogen. This may also cause porosity due to nitrogen pickup.

A8.2.6 The reader is cautioned that the shielding gas itself can contribute significantly to diffusible hydrogen. Normally, welding-grade shielding gases are intended to have very low dew points and very low impurity levels. This, however, is not always the case. Instances have occurred where a contaminated gas cylinder resulted in a significant increase of diffusible hydrogen in the weld metal. In case of doubt, a check of gas dew point is suggested. A dew point of −40°F (−40°C) or lower is considered satisfactory for most applications.

A8.2.7 Some flux cored electrodes can absorb significant moisture if stored in a humid environment in damaged or open packages, or especially if unprotected for long periods of time. In the worst cases of high humidity, even overnight exposure of unprotected electrodes can lead to a significant increase of diffusible hydrogen. In the event the electrode has been exposed, the manufacturer should be consulted regarding probable damage to low-hydrogen characteristics and possible reconditioning of the electrodes.

A8.2.8 Not all flux cored electrode classifications may be available in the H16, H8, or H4 diffusible hydrogen levels. The manufacturer of a given electrode should be consulted for availability of products meeting these limits.

A8.3 Aging of Tensile Specimens. Weld metals may contain significant quantities of hydrogen for some time after they have been made. Most of this hydrogen gradually escapes over time. This may take several weeks at room temperature or several hours at elevated temperatures. As a result of this eventual change in hydrogen level, ductility of the weld metal increases toward its inherent value, while yield, tensile, and impact strengths remain relatively unchanged. This specification permits the aging of the tensile test specimens at elevated temperatures from 200 to 220°F (90 to 104°C) for up to 48 hours before subjecting them to tension testing. The purpose of this treatment is to facilitate removal of hydrogen from the test specimen in order to minimize discrepancies in testing.

Aging treatments are sometimes used for low-hydrogen electrode deposits, especially when testing high-strength deposits. Note that aging may involve holding test specimens at room temperature for several days or holding at a higher temperature for a shorter period of time. Consequently, users are cautioned to employ adequate preheat and interpass temperatures to avoid the deleterious effects of hydrogen in production welds.

A9. Safety Considerations

A9.1 Burn Protection. Molten metal, sparks, slag, and hot work surfaces are produced by welding, cutting, and allied processes. These can cause burns if precautionary measures are not used. Workers should wear protective clothing made of fire-resistant material. Pant cuffs, open pockets, or other places on clothing that can catch and retain molten metal or sparks should not be worn. High-top shoes or leather leggings and fire-resistant gloves should be worn. Pant legs should be worn over the outside of high-top shoes. Helmets or hand shields that provide protection for the face, neck, and ears, and a protective head covering should be used. In addition, appropriate eye protection should be used.

When welding overhead or in confined spaces, ear plugs to prevent weld spatter from entering the ear canal should be worn in combination with goggles, or the equivalent, to give added eye protection. Clothing should be kept free of grease and oil. Combustible materials should not be carried in pockets. If any combustible substance has been spilled on clothing, a change to clean, fire-resistant clothing should be made before working with open arcs or flames. Aprons, cape-sleeves, leggings, and shoulder covers with bibs designed for welding service should be used. Where welding or cutting of unusually thick base metal is involved, sheet metal shields should be used for extra protection.

Mechanization of highly hazardous processes or jobs should be considered. Other personnel in the work area should be protected by the use of noncombustible screens or by the use of appropriate protection as described in the previous paragraph. Before leaving a work area, hot workpieces should be marked to alert

other persons of this hazard. No attempt should be made to repair or disconnect electrical equipment when it is under load. Disconnection under load produces arcing of the contacts and may cause burns or shock, or both. *(Note: Burns can be caused by touching hot equipment such as electrode holders, tips, and nozzles. Therefore, insulated gloves should be worn when these items are handled, unless an adequate cooling period has been allowed before touching.)*

The following sources are for more detailed information on personal protection:

(a) American National Standards Institute. ANSI/ASC Z87.1, *Practice for Occupational and Educational Eye and Face Protection*. New York: American National Standards Institute.[5]

(b) —. ANSI Z41, *Personal Protection — Protective Footwear*. New York: American National Standards Institute.

(c) American Welding Society. ANSI/ASC Z49.1, *Safety in Welding, Cutting, and Allied Processes*. Miami, FL: American Welding Society.[6]

(d) OSHA. *Code of Federal Regulations*, Title 29 — Labor, Chapter XVII, Part 1910. Washington, DC: U.S. Government Printing Office.[7]

A9.2 Electrical Hazards. Electric shock can kill. However, it can be avoided. Live electrical parts should not be touched. The manufacturer's instructions and recommended safe practices should be read and understood. Faulty installation, improper grounding, and incorrect operation and maintenance of electrical equipment are all sources of danger.

All electrical equipment and the workpieces should be grounded. The workpiece lead is not a ground lead; it is used only to complete the welding circuit. A separate connection is required to ground the workpiece.

The correct cable size should be used, since sustained overloading will cause cable failure and result in possible electrical shock or fire hazard. All electrical connections should be tight, clean, and dry. Poor connections can overheat and even melt. Further, they can produce dangerous arcs and sparks. Water, grease, or dirt should not be allowed to accumulate on plugs, sockets, or electrical units. Moisture can conduct electricity. To prevent shock, the work area, equipment, and clothing should be kept dry at all times. Welders should wear dry gloves and rubber-soled shoes, or stand on a dry board or insulated platform.

Cables and connections should be kept in good condition. Improper or worn electrical connections may create conditions that could cause electrical shock or short circuits. Worn, damaged, or bare cables should not be used. Open-circuit voltage should be avoided. When several welders are working with arcs of different polarities, or when a number of alternating current machines are being used, the open-circuit voltages can be additive. The added voltages increase the severity of the shock hazard.

In case of electric shock, the power should be turned off. If the rescuer must resort to pulling the victim from the live contact, nonconducting materials should be used. If the victim is not breathing, cardiopulmonary resuscitation (CPR) should be administered as soon as contact with the electrical source is broken. A physician should be called and CPR continued until breathing has been restored, or until a physician has arrived. Electrical burns are treated as thermal burns; that is, clean, cold (iced) compresses should be applied. Contamination should be avoided; the area should be covered with a clean, dry dressing; and the patient should be transported to medical assistance.

Recognized safety standards such as ANSI/ASC Z49.1, and NFPA No. 70, *National Electrical Code,* should be followed.[8]

A9.3 Fumes and Gases. Many welding, cutting, and allied processes produce fumes and gases which may be harmful to health. Fumes are solid particles which originate from welding filler metals and fluxes, the base metal, and any coatings present on the base metal. Gases are produced during the welding process or may be produced by the effects of process radiation on the surrounding environment. Management, welders and other personnel should be aware of the effects of these fumes and gases. The amount and composition of these fumes and gases depend upon the composition of the electrode and base metal, welding process, current level, arc length and other factors.

The possible effects of over exposure range from irritation of eyes, skin, and respiratory system to more severe complications. Effects may occur immediately or at some later time. Fumes can cause symptoms such as nausea, headaches, dizziness and metal fume fever. The possibility of more serious health effects exists when especially toxic materials are involved. In confined spaces, the shielding gases and fumes might displace

[5] ANSI standard may be obtained from the American National Standards Institute, 11 West 42nd Street, New York, NY 10036.

[6] AWS standards may be obtained from the American Welding Society, 550 N.W. LeJeune Road, Miami, FL 33126.

[7] OSHA standards may be obtained from the U.S. Government Printing Office, Washington, DC 20402.

[8] NFPA documents are available from the National Fire Protection Association, 1 Batterymarch Park, Quincy, MA 02269-9101.

breathing air and cause asphyxiation. One's head should always be kept out of the fumes. Sufficient ventilation, exhaust at the arc, or both, should be used to keep fumes and gases from your breathing zone and the general area.

In some cases, natural air movement will provide enough ventilation. Where ventilation may be questionable, air sampling should be used to determine if corrective measures should be applied.

Special precautions should be used when welding with the electrodes of the B3, B6, and B8 series. As a group, the fumes from the normal use of these electrodes contain significant amounts of hexavelant chromium (Cr VI) compounds. The permissible exposure limit (PEL) and the threshold limit value (TLV®) for Cr VI of 0.05 mg/m^3 as chromium will be exceeded before reaching the 5.0 mg/m^3 threshold limit value for general welding fume. Therefor, for these products, monitoring for hexavelant chromium will be more conservative than monitoring for general welding fume. Short-term effects of excessive overexposure to Cr VI present in fumes may be an irritation to the breathing system. Some people may have allergic reactions. Chromium VI is considered a carcinogen by the International Agency for Research on Cancer (IARC) and the National Toxicology Program (NTP). However, evidence from studies involving welding fumes and gases containing chromium compounds do not confirm any carcinogenic risk when exposures are held within OSHA mandated limits.

More detailed information on fumes and gases produced by the various welding processes may be found in the following:

(a) The permissible exposure limits required by OSHA can be found in *Code of Federal Regulations*, Title 29 — Labor, Chapter XVII, Part 1910.

(b) The recommended threshold limit values for these fumes and gases may be found in *Threshold Limit Values for Chemical Substances and Physical Agents in the Workroom Environment*, published by the American Conference of Governmental Industrial Hygienists (ACGIH).[9]

(c) The results of an AWS-funded study are available in a report entitled, *Fumes and Gases in the Welding Environment.*

A9.4 Radiation. Welding, cutting, and allied operations may produce radiant energy (radiation) harmful to health. One should become acquainted with the effects of this radiant energy.

Radiant energy may be ionizing (such as x-rays), or nonionizing (such as ultraviolet, visible light, or infrared). Radiation can produce a variety of effects such as skin burns and eye damage, depending on the radiant energy's wavelength and intensity, if excessive exposure occurs.

A9.4.1 Ionizing Radiation. Ionizing radiation is produced by the electron beam welding process. It is ordinarily controlled within acceptance limits by use of suitable shielding enclosing the welding area.

A9.4.2 Nonionizing Radiation. The intensity and wavelengths of nonionizing radiant energy produced depend on many factors, such as the process, welding parameters, electrode and base-metal composition, fluxes, and any coating or plating on the base metal. Some processes, such as resistance welding and cold pressure welding, ordinarily produce negligible quantities of radiant energy. However, most arc welding and cutting processes (except submerged arc when used properly), laser beam welding and torch welding, cutting, brazing, or soldering can produce quantities of nonionizing radiation such that precautionary measures are necessary.

Protection from possible harmful effects caused by nonionizing radiant energy from welding include the following measures:

(a) One should not look at welding arcs except through welding filter plates which meet the requirements of ANSI/ASC Z87.1, *Practice for Occupational and Educational Eye and Face Protection.* It should be noted that transparent welding curtains are not intended as welding filter plates, but rather are intended to protect passersby from incidental exposure.

(b) Exposed skin should be protected with adequate gloves and clothing as specified in ANSI/ASC Z49.1, *Safety in Welding, Cutting, and Allied Processes.*

(c) Reflections from welding arcs should be avoided, and all personnel should be protected from intense reflections. *(Note: Paints using pigments of substantially zinc oxide or titanium dioxide have a lower reflectance for ultraviolet radiation.)*

(d) Screens, curtains, or adequate distance from aisles, walkways, etc., should be used to avoid exposing passersby to welding operations.

(e) Safety glasses with UV-protective side shields have been shown to provide some beneficial protection from ultraviolet radiation produced by welding arcs.

A9.4.3 Ionizing radiation information sources include the following:

[9] ACGIH documents are available from the American Conference of Governmental Industrial Hygienists, 1330 Kemper Meadow Drive, Suite 600, Cincinnati, OH 45240-1634

(a) American Welding Society F2.1-78, *Recommended Safe Practices for Electron Beam Welding and Cutting*.

(b) Manufacturer's product information literature.

A9.4.4 Nonionizing radiation information sources include the following:

(a) American National Standards Institute. ANSI/ASC Z136.1, *Safe Use of Lasers*. New York: American National Standards Institute.

(b) —. ANSI/ASC Z87.1, *Practice for Occupational and Educational Eye and Face Protection*. New York: American National Standards Institute.

(c) American Welding Society. ANSI/ASC Z49.1, *Safety in Welding, Cutting, and Allied Processes*. Miami, FL: American Welding Society.

(d) Hinrichs, J. F. "Project Committee on Radiation — Summary Report." *Welding Journal* 57 (1):62–65, 1978.

(e) Marshall, W. J., Sliney, D. H., et al. "Optical Radiation Levels Produced by Air-Carbon Arc Cutting Processes." *Welding Journal* 59 (3):43–46, 1979.

(f) Moss, C. E., and Murray, W.E. "Optical Radiation Levels Produced in Gas Welding, Torch Brazing, and Oxygen Cutting." *Welding Journal* 58 (9):37–46, 1979.

(g) Moss, C. E. "Optical Radiation Transmission Levels through Transparent Welding Curtains." *Welding Journal* 58 (3): 69-s to 75-s, 1979.

(h) National Technical Information Service.[10] Nonionizing Radiation Protection Special Study No. 42-0053-77, *Evaluation of the Potential Hazards from Actinic Ultraviolet Radiation Generated by Electric Welding and Cutting Arcs*. Springfield, VA: National Technical Information Service.

(i) National Technical Information Service. Nonionizing Radiation Protection Special Study No. 42-0312-77, *Evaluation of the Potential Retina Hazards from Optical Radiation Generated by Electrical Welding and Cutting Arcs*. Springfield, VA: National Technical Information Service.

A10. Changed or Obsolete Classifications

The E80T1-W classification from A5.29-80 has been changed to E8XT1-W2, -W2M to conform with other documents.

---

[10] National Technical Information documents are available from the National Technical Information Service, Springfield, VA 22161.

SPECIFICATION FOR CONSUMABLE INSERTS

SFA-5.30

(Identical with AWS Specification A5.30-79R)

Scope:

This specification prescribes requirements for classification of consumable inserts.[1]

Note: The values stated in U.S. customary units are to be regarded as the standard. The SI units are given as equivalent values to the U.S. customary units. The published sizes and dimensions in the two systems are not identical, and for this reason conversion from a published size or dimension in one system will not always coincide with the published size or dimension in the other. Suitable conversions encompassing published sizes of both can be made, however, if appropriate tolerances are applied in each case.

1. Classification and Acceptance

1.1 Classification[2]

1.1.1 Consumable inserts are classified on the basis of their chemical composition as manufactured (see Tables 1, 2, 3, and 4).

1.1.2 Any consumable insert classified under one classification shall not be classified under any other classification of this specification.

1.2 Acceptance. At the option and expense of the purchaser, any or all of the test requirements of this specification may be used as a basis for acceptance of the products covered by this specification.

1.3 Chemical Composition Requirements. The chemical composition shall conform to the requirements of Tables 1, 2, 3, or 4 for the classification involved. The details of the test are specified in Section 3.

[1] For definition of "consumable insert," see AWS A3.0-76, Welding Terms and Definitions.

[2] For an explanation of the system of classification, see paragraph A2 in the Appendix.

2. Manufacture

2.1 Method of Manufacture. The consumable inserts may be made by any method that will yield a product conforming to the requirements of this specification.

2.2 Standard Shapes, Styles, and Sizes. Standard shapes, styles, and sizes shall be as listed below and shown in Fig. 1 and Tables 5, 6, 7, and 8.[3]

2.2.1 Class 1, inverted T-shaped cross section

2.2.1.1 Style A, coiled consumable insert

2.2.1.2 Style B, preformed rings, open lap joint

2.2.1.3 Style C, preformed rings, open butt joint

2.2.2 Class 2, J-shaped cross section

2.2.2.1 Style A, coiled consumable insert

2.2.2.2 Style B, preformed rings, open lap joint

2.2.2.3 Style C, preformed rings, open butt joint

2.2.3 Class 3, rectangular-shaped cross section

2.2.3.1 Style D, solid rings, $^3/_{16}$ in. (4.8 mm) rim width

2.2.3.2 Style E, solid rings, $^1/_8$ in. (3.2 mm) rim width

2.2.4 Class 4, Y-shaped cross section

2.2.4.1 Style A, coiled consumable insert

[3] Other sizes and shapes may be supplied upon agreement between supplier and purchaser. Chemical composition of other sizes and shapes shall conform to the pertinent classification requirements of this specification.

TABLE 1
CHEMICAL COMPOSITION PERCENT — MILD STEEL[a]

	AWS Classification	C	Mn	P	S	Si	Al	Zr	Ti
Group A	INMs1	0.07	0.90 to 1.40	0.025	0.035	0.40 to 0.70	0.05[b] to 0.15	0.02[b] to 0.12	0.05[b] to 0.15
	INMs2	0.06 to 0.15	0.90 to 1.40	0.025	0.035	0.45 to 0.70			
	INMs3	0.07 to 0.15	1.40 to 1.85	0.025	0.035	0.80 to 1.15			

NOTES:
a. Single values are maximum percentages, except where otherwise specified.
b. Al + Zr + Ti = 0.15 minimum.

TABLE 2
CHEMICAL COMPOSITION PERCENT — CHROMIUM MOLYBDENUM STEELS[a]

	AWS Classification	C	Mn	P	S	Si	Al	Cr	Mo	Ni	Cu	Total Other
Group B	IN502	0.10	0.40 to 0.75	0.025	0.025	0.25 to 0.50	0.15	4.5 to 6.0	0.45 to 0.65	—	—	—
	IN515	0.12	0.40 to 0.70	0.025	0.025	0.40 to 0.70	0.15	1.20 to 1.50	0.40 to 0.65	0.20	0.35	0.50
	IN521	0.12	0.40 to 0.70	0.025	0.025	0.40 to 0.70	0.15	2.30 to 2.70	0.90 to 1.20	0.20	0.35	0.50

NOTE:
a. Single values are maximum percentages, except where otherwise specified.

TABLE 3
CHEMICAL COMPOSITION PERCENT — AUSTENITIC CHROMIUM NICKEL STEELS[a]

	AWS Classification	C	Cr	Ni	Mo	Cb + Ta	Mn	Si	P	S	Cu
Group C	IN308[b,d]	0.08	19.5 to 22.0	9.0 to 11.0			1.0 to 2.5	0.25 to 0.60	0.03	0.03	
	IN308L[b,d]	0.03	19.5 to 22.0	9.0 to 11.0			1.0 to 2.5	0.25 to 0.60	0.03	0.03	
	IN310	0.08 to 0.15	25.0 to 28.0	20.0 to 22.5			1.0 to 2.5	0.25 to 0.60	0.03	0.03	
	IN312[b,d]	0.08 to 0.15	28.0 to 32.0	8.0 to 10.5			1.0 to 2.5	0.25 to 0.60	0.03	0.03	
	IN316	0.08	18.0 to 20.0	11.0 to 14.0	2.0 to 3.0		1.0 to 2.5	0.25 to 0.60	0.03	0.03	
	IN316L	0.03	18.0 to 20.0	11.0 to 14.0	2.0 to 3.0		1.0 to 2.5	0.25 to 0.60	0.03	0.03	
	IN348[b,d]	0.08	19.0 to 21.5	9.0 to 11.0		10 × C min[c] to 1.0 max	1.0 to 2.5	0.25 to 0.60	0.03	0.03	

NOTES:
a. Single values shown are maximum percentages, except where otherwise specified.
b. Delta ferrite may be specified upon agreement between supplier and purchaser.
c. Tantalum content shall not exceed 0.10 percent.
d. The cobalt content shall not exceed 0.10 percent.

TABLE 4
CHEMICAL COMPOSITION PERCENT — NICKEL ALLOY (INCLUDES COPPER-NICKEL)[a,b]

	AWS Classification	C	Mn	Fe	S	P	Si	Cu	Ni + Co	Al	Ti	Cr	Cb + Ta	Other Elements, Total
Group E	IN60	0.15	4.00	2.50	0.015	0.020	1.25	Balance	62.0 to 69.0	1.25	1.5 to 3.0	...	...	0.50
	IN61	0.15	1.00	1.00	0.015	0.030	0.75	0.25	93.0 min	1.50	2.0 to 3.5	...	...	0.50
	IN62	0.08	1.00	6.0 to 10.0	0.015	0.030	0.35	0.50	70.0 min[c]	...	...	14.0 to 17.0	1.5 to 3.0[d]	0.50
	IN67	...	1.00	0.40 to 0.75	0.01	0.020	0.15	Balance	29.0 to 32.0	...	0.2 to 0.5	...	...	0.50
	IN6A	0.08	2.00 to 2.75	8.00	0.015	0.030	0.35	0.50	67.0 min[c]	...	2.5 to 3.5	14.0 to 17.0	...	0.50
	IN82	0.10	2.50 to 3.50	3.00	0.015	0.030	0.50	0.50	67.0 min[c]	...	0.75	18.0 to 22.0	2.0 to 3.0[d]	0.50

NOTES:
a. Analysis shall be made for the elements for which specific values are shown. If, however, the presence of other elements is indicated in the course of routine analysis, further analysis shall be made to determine that the total of these other elements is not present in excess of the limits specified for "Other elements, total."
b. Single values shown are maximum percentages, except where otherwise specified.
c. Cobalt shall not exceed 0.10 percent.
d. Tantalum shall not exceed 0.30 percent.

2.2.4.2 Style B, preformed rings, open lap joint

2.2.4.3 Style C, preformed rings, open butt joint

2.2.5 Class 5, rectangular-shaped cross section (contoured edges)

2.2.5.1 Style A, coiled consumable insert

2.2.5.2 Style B, preformed rings, open lap joint

2.2.5.3 Style C, preformed rings, open butt joint

2.3 Standard Packages. Consumable inserts shall be suitably packaged to insure against damage during shipment and storage under normal conditions. The weight of the package shall be agreed upon by the supplier and purchaser and shall not exceed 60 lbs (27 kg).

2.4 Marking

2.4.1 The outside of each unit package of consumable inserts shall be legibly marked to provide the following information:

2.4.1.1 Specification and classification number

2.4.1.2 Supplier's name and trade designation

2.4.1.3 Standard size and net weight

2.4.1.4 Lot, control, or heat number.[4]

2.4.2 Marking of any or all overpackaging of unit packages with items listed in 2.4.1 shall be optional with the manufacturer.

2.4.3 All packages shall carry the following caution label, as a minimum, prominently displayed in legible type:

CAUTION

Welding may produce fumes and gases hazardous to health. Avoid breathing these fumes and gases. Use adequate ventilation. See American National Standard Z49.1, Safety in Welding and Cutting, published by the American Welding Society.

2.5 Consumable Insert Identification. All consumable inserts shall be tagged or otherwise identified to provide the AWS classification number. The prefix letters IN in the insert classification number may be omitted.

[4] For purposes of this specification, a lot shall be those consumable inserts having the same cross-sectional shape and produced from the same heat of metal. Heat is defined as that material obtained from the same melt of metal.

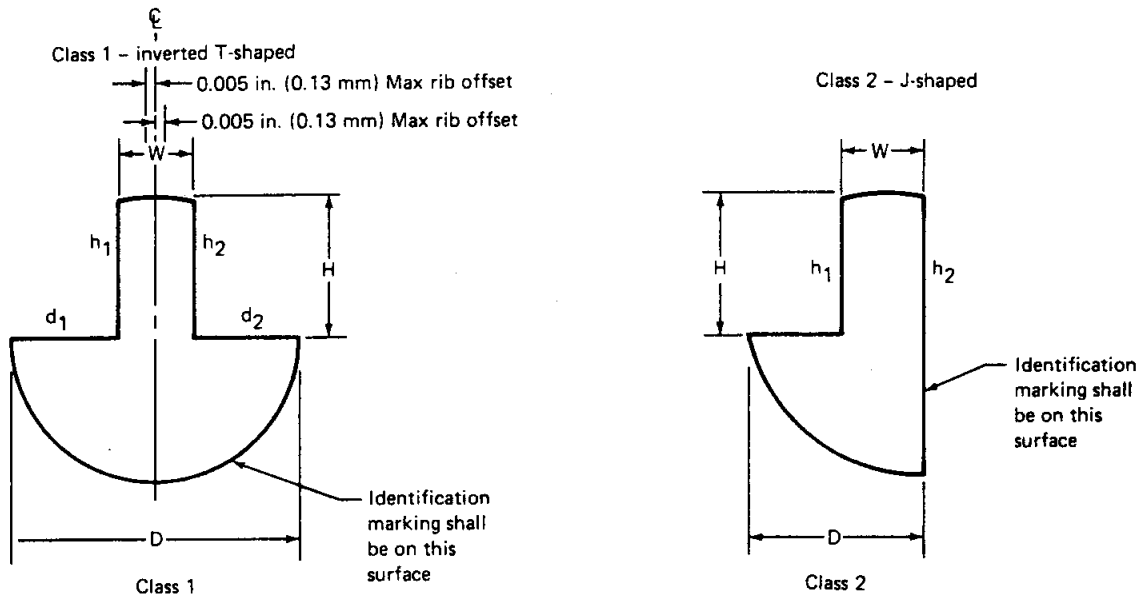

Notes:

1. Lands (d_1, d_2) on either side of the rib shall be on the same plane within 0.005 in. (0.13 mm).
2. Rib surfaces (h_1 h_2) shall be parallel within 0.002 in. (0.05 mm) and square with lands (d_1, d_2) within 0.005 in. (0.13 mm).
3. Dimensions and tolerances, see Table 8.

Class 1 and Class 2 inserts – Cross-sectional configuration

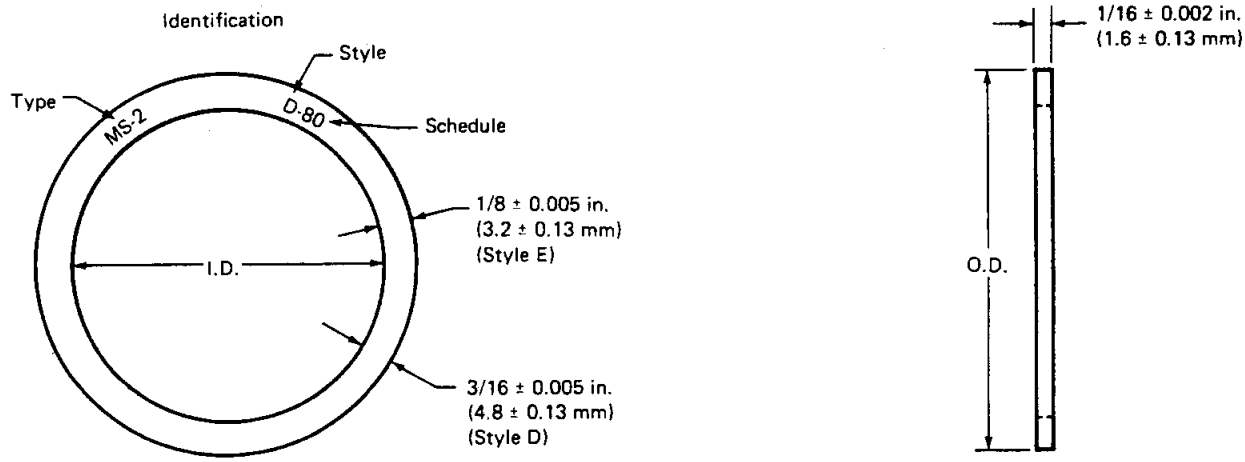

Class 3 – Solid ring inserts – Plan view and cross-sectional configurations

FIG. 1 STANDARD SIZES AND SHAPES OF CONSUMABLE INSERTS

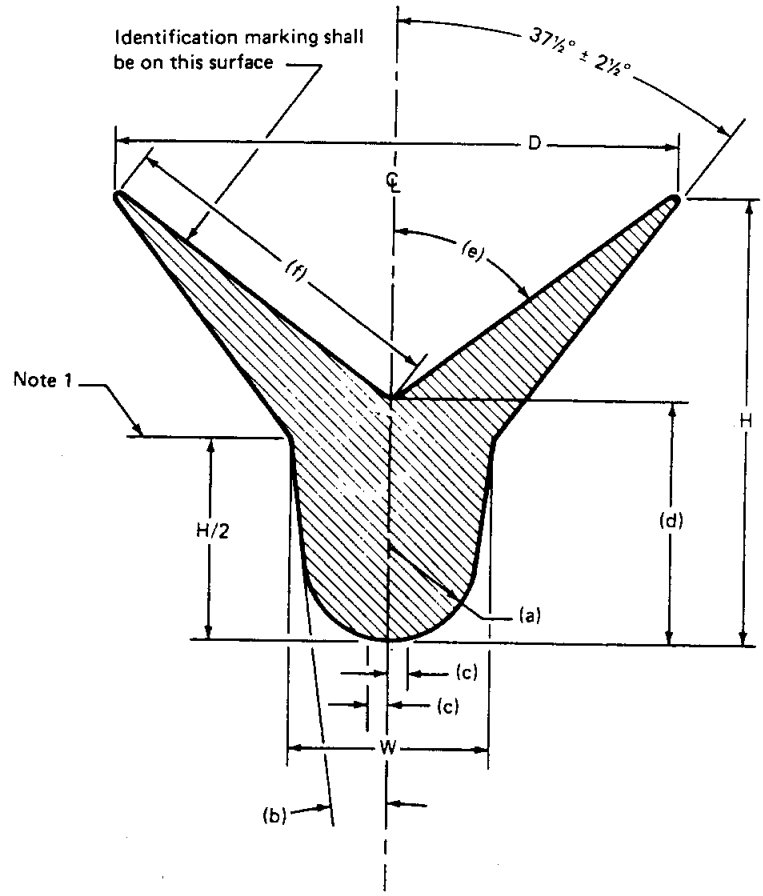

Notes:

1. Reference diameter for correlating with pipe I.D.
2. Dimensions and tolerances, see Table 8.
3. When specified, rings 1-1/2 to 2 in. (38.1 to 50.8 mm) in diameter shall be formed of 5/32 in. (4.0 mm) material.

Class 4 inserts – cross-sectional configuration

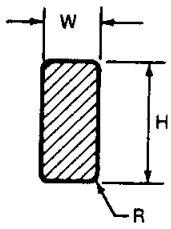

1/8 in. x 5/32 in. (3.2 mm x 4.0 mm)
with slight radius on edges

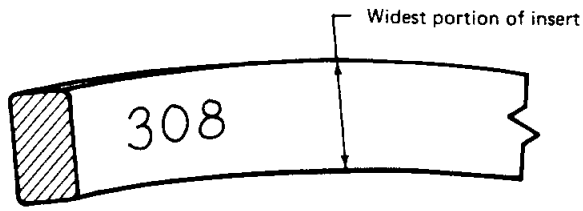

Class 5 inserts – cross-sectional configuration

FIG. 1 STANDARD SIZES AND SHAPES OF CONSUMABLE INSERTS (CONT'D)

TABLE 5
CLASSES 1, 2, AND 5, STYLE B — MINIMUM OVERLAP

Nominal Pipe Sizes		Circumferential Overlap	
in.	mm	in.	mm
1	25.0	1/4	6.4
1-1/4	32.0	1/4	6.4
1-1/2	38.0	1/4	6.4
2	51.0	1/4	6.4
2-1/2	64.0	1/4	6.4
3	76.0	3/8	9.5
3-1/2	89.0	3/8	9.5
4	102.0	3/8	9.5
5	127.0	1/2	12.7
6	152.0	1/2	12.7
8	203.0	5/8	15.9
10	254.0	3/4	19.1
12	305.0	3/4	19.1
14	356.0	3/4	19.1

2.6 Rounding Off Procedures. For purposes of determining conformance with this specification, an observed or calculated value shall be rounded off to the nearest unit in the last right-hand place of figures used in expressing the limiting value for values in accordance with the rounding-off method of ASTM E29, Recommended Practice for Indicating Which Places of Figures are to be Considered Significant in Specified Limiting Values.[5]

2.7 Certification. For all material furnished under this specification, the manufacturer certifies (by meeting the requirements of 2.4) that the material, or representative material, has passed the tests required for classification by this specification. When required by the purchaser, the manufacturer shall furnish a copy of the results of those tests.

3. Details of Test Chemical Analysis

3.1 An adequate sample of as-manufactured consumable insert material, sufficient for re-test if necessary, shall be acquired to perform the prescribed chemical analysis.

3.2 Chemical analysis may be made by any suitable method agreed upon by the supplier and the purchaser. In case of dispute, referee methods of analysis shall be according to the appropriate technique set forth in the latest edition of the ASTM Methods for Chemical Analysis of Metals.

[5] ASTM standards can be obtained from the American Society for Testing and Materials, 100 Barr Harbor Drive, West Conshohocken, PA 19428-2959.

TABLE 6
CLASS 3, STYLE D INSERTS — DIMENSIONS

Pipe Dimensions					Ring Diameter[2]			
Nominal Diameter		Schedule Number[1]	ID[2]		Ring OD for Nominal Pipe Diameter		Ring ID for Nominal Pipe Diameter	
in.	mm		in.	mm	in.	mm	in.	mm
2	51	10S	2.157	54.78	2.43	61.7	2.06	52.3
		40	2.067	52.50	2.34	59.4	1.97	50.0
		80	1.939	49.25	2.22	56.4	1.85	47.0
2-½	64	10S	2.635	66.93	2.91	73.9	2.54	64.5
		40	2.469	62.71	2.75	69.9	2.38	60.4
		80	2.323	59.00	2.60	66.0	2.23	56.6
3	76	10S	3.260	82.80	3.54	88.9	3.17	80.5
		40	3.068	77.93	3.35	85.1	2.98	75.7
		80	2.900	73.66	3.18	80.8	2.81	71.4
3-½	89	10S	3.760	95.50	4.04	102.6	3.67	93.2
		40	3.548	90.12	3.82	97.0	3.45	87.6
		80	3.364	85.45	3.64	92.5	3.27	83.1
4	102	10S	4.260	108.20	4.54	115.3	4.17	105.9
		40	4.026	102.26	4.30	109.2	3.93	99.8
		80	3.826	97.18	4.10	104.1	3.73	94.7
5	127	5S	5.345	135.76	5.62	142.7	5.25	133.4
		10S	5.295	134.49	5.57	141.5	5.20	132.1
		40	5.047	128.19	5.32	135.1	4.95	125.7
		80	4.813	122.25	5.09	129.3	4.72	119.9
6	152	5S	6.407	162.74	6.68	169.7	6.31	160.3
		10S	6.357	161.47	6.63	168.4	6.26	159.0
		40	6.065	154.05	6.34	161.0	5.97	151.6
		80	5.761	146.33	6.04	153.4	5.67	144.0
8	203	5S	8.407	213.54	8.68	220.4	8.31	211.1
		10S	8.329	211.56	8.61	218.7	8.24	209.3
		40	7.981	202.72	8.26	209.8	7.89	200.4
		80	7.625	193.68	7.90	200.7	7.53	191.3
10	254	5S	10.482	266.24	10.76	273.3	10.39	263.9
		10S	10.420	264.67	10.70	271.8	10.33	262.4
		40	10.020	254.51	10.30	261.6	9.93	252.2
		80S	9.750	247.65	10.03	254.8	9.66	245.4
		80	9.564	242.93	9.84	249.9	9.47	240.5
12	305	5S	12.420	315.47	12.70	322.6	12.33	313.2
		10S	12.390	314.71	12.67	321.8	12.30	312.4
		40S	12.000	304.80	12.28	311.9	11.91	302.5
		40	11.938	303.22	12.22	310.4	11.85	301.0
		80S	11.750	298.45	12.03	305.6	11.66	296.2
		80	11.376	288.95	11.65	295.9	11.28	286.5
14	356	10	13.500	342.90	13.78	350.0	13.41	340.6
		40	13.126	333.40	13.40	340.4	13.03	331.0
		80	12.500	317.50	12.78	324.6	12.41	315.2
16	406	10	15.500	393.70	15.78	400.8	15.41	391.4
		40	15.000	381.00	15.28	388.1	14.91	378.7
		80	14.314	363.58	14.59	370.6	14.22	361.2

NOTES:
1. Schedule number followed by "S" applies to Group C types.
2. Class 3, style D insert rings are normally furnished to match nominal internal diameters of the pipe. Special ring sizes (non-stranded) shall be obtainable when specified by contract or purchase order. The dimensions of such rings are determined as follows:
   Ring ID (inside diameter) = pipe ID − 0.094 in. (2.38 mm)
   Ring OD (outside diameter) = ring ID + 0.375 in. (9.53 mm)
   Where special applications demand, rings have ⅛ in. (3.2 mm) instead of the 3/16 in. (4.8 mm) dimension shown on Fig. 1, the narrower width (style E) shall be made available as shown in Table 8. To determine the required ID and OD dimensions for the narrower type, substitute 0.250 in. (6.35 mm) for 0.375 in. (9.53 mm) in the above equations.

TABLE 7
CLASS 3, STYLE E INSERTS — DIMENSIONS*

Pipe Dimensions					Ring Diameters[2]			
Nominal Diameter		Schedule Number[1]	ID[2]		Ring OD for Nominal Pipe Diameter		Ring ID for Nominal Pipe Diameter	
in.	mm		in.	mm	in.	mm	in.	mm
1/4	6.4	10S	0.410	10.41	0.57	14.5	0.32	8.1
		40	0.364	9.25	0.52	13.2	0.27	6.8
		80	0.302	7.67	0.46	11.7	0.21	5.3
3/8	9.5	10S	0.545	13.84	0.70	17.8	0.45	11.4
		40	0.493	12.52	0.65	16.5	0.40	10.1
		80	0.423	10.74	0.58	14.7	0.33	8.4
1/2	12.7	5S	0.710	18.03	0.87	22.1	0.62	15.7
		10S	0.674	17.12	0.83	21.1	0.58	14.7
		40	0.622	15.80	0.78	19.8	0.53	13.5
		80	0.546	13.87	0.70	17.8	0.45	11.4
3/4	19.1	5S	0.920	23.37	1.08	27.4	0.83	21.1
		10S	0.884	22.45	1.04	26.4	0.79	20.1
		40	0.824	20.93	0.98	24.9	0.73	18.5
		80	0.742	18.85	0.90	22.9	0.65	16.5
1	25.0	5S	1.185	30.10	1.34	34.0	1.09	27.7
		10S	1.097	27.86	1.25	31.8	1.00	25.4
		40	1.049	26.64	1.21	30.7	0.96	24.4
		80	0.957	24.31	1.11	28.2	0.86	21.8
1-1/4	32.0	5S	1.530	38.86	1.69	42.9	1.44	36.6
		10S	1.442	36.63	1.60	40.6	1.35	34.3
		40	1.380	35.05	1.54	39.1	1.29	32.8
		80	1.278	32.46	1.43	36.3	1.18	30.0
1-1/2	38.0	5S	1.770	44.96	1.93	49.0	1.68	42.7
		10S	1.682	42.72	1.84	46.7	1.59	40.4
		40	1.610	40.89	1.77	45.0	1.52	38.6
		80	1.500	38.10	1.65	41.9	1.41	35.8
2	51	5S	2.245	57.02	2.40	61.0	2.15	54.6
		10S	2.157	54.79	2.31	58.7	2.06	52.3
		40	2.067	52.50	2.22	56.4	1.97	50.0
		80	1.939	49.25	2.10	53.3	1.85	47.0
2-1/2	64	5S	2.709	68.81	2.87	72.9	2.62	66.5
3	76	5S	3.334	84.68	3.49	88.6	3.24	82.3
3-1/2	89	5S	3.834	97.38	3.99	101.3	3.74	95.0
4	102	5S	4.334	110.08	4.49	114.0	4.24	107.7

*See footnotes at end of Table 6.

TABLE 8
CLASSES 1, 2, 4, AND 5 INSERTS — CROSS-SECTIONAL DIMENSIONS AND TOLERANCES

Insert Size			Class One,[1] Inverted T-Shaped				Class Two,[1] J-Shaped				Class Four,[2] Y-Shaped				Class Five, Rectangular-Shaped			
			Dimensions		Tolerances		Dimensions		Tolerances		Dimensions		Tolerances		Dimensions		Tolerances	
in.	mm	Legend (Fig.1)	in.	mm	in.	mm	in.	mm	in.	mm	in.	mm	in.	mm	in.	mm	in.	mm
1/8	3.2	D	0.125	3.18	±0.004	±0.10	0.086	2.18	+0.011 0.005	+0.28 0.13	0.165	4.19	±0.010	±0.25	...	...	...	...
		W	0.047	1.19	+0.002 0.012	+0.05 0.30	0.047	1.19	+0.002 0.012	+0.05 0.30	0.078	1.98	±0.010	±0.25	0.0625	1.59	±0.010	±0.25
		H	0.055	1.40	+0.012 0.002	+0.30 0.05	0.055	1.40	+0.012 0.002	+0.30 0.05	0.140	3.56	±0.010	±0.25	0.125	3.18	±0.010	±0.25
		H/2	...	...	...	...	...	...	...	...	0.072	1.83	±0.010	±0.25	...	...	...	...
		R	...	...	...	...	...	...	...	...	...	...	...	...	0.0156	0.40	±0.005	±0.13
5/32	4.0	D	0.156	3.96	±0.005	±0.13	0.110	2.79	+0.012 0.010	+0.30 0.25	0.205	5.21	±0.015	±0.38	...	...	...	...
		W	0.063	1.60	+0.003 0.014	+0.08 0.36	0.063	1.60	+0.003 0.014	+0.08 0.36	0.093	2.36	±0.015	±0.38	0.125	3.18	±0.015	±0.38
		H	0.063	1.60	+0.014 0.003	+0.36 0.08	0.063	1.60	+0.014 0.010	+0.36 0.25	0.175	4.45	±0.010	±0.25	0.156	3.96	±0.015	±0.38
		H/2	...	...	...	...	...	...	...	...	0.093	2.36	±0.010	±0.25	...	...	...	...
		R	...	...	...	...	...	...	...	...	...	...	...	...	0.03125	0.794	±0.005	±0.13

NOTES:
1. The offset between the center of the rib (W) and center of the land (D) shall not exceed 0.005 in. (0.13 mm).
2. Additional dimensions and tolerances — class 4, Y-shaped inserts (See Fig. 1):

	1/8 in. size	3.2 mm size	5/32 in. size	4.0 mm size
(a) Radius of rib	0.044 ± 0.005	1.12 ± 0.13	0.050 ± 0.005	1.27 ± 0.13
(b) Angle between side of rib and center line	1° † 2°	1° † 2°	1° † 2°	1° † 2°
(c) Rib offset	±0.010	±0.25	±0.015	±0.38
(d) Height of rib along center line	0.100 ± 0.010	2.54 ± 0.25	0.115 ± 0.010	2.92 ± 0.25
(e) Angle between top surface of inclined arm and center line	50° ± 5°	50° ± 5°	50° ± 5°	50° ± 5°
(f) Length of inclined arm	0.085 ± 0.010	2.16 ± 0.25	0.125 ± 0.010	3.18 ± 0.25

From a practical inspection standpoint, the D, W, H, and H/2 dimensions have the most to do with the usability and weldability. The (a) through (f) dimensions are furnished to complete the description of the cross-sectional configuration.

Appendix: Guide to AWS Classification of Consumable Inserts

A1 Introduction

This guide is appended to the specification as a source of information; *it is not mandatory and does not form a part of the specification.* The purpose of this guide is to correlate the filler metal classification with intended applications so that this specification may be used effectively.

A2 Classification System

A2.1 The classification system used in this specification follows as closely as possible the standard pattern used in other AWS filler metal specifications. The inherent nature of the products being classified have, however, necessitated specific changes that more ably classify the product. As an example, consider IN308. The prefix IN designates a consumable insert. The numbers 308 designate the chemical composition.

A2.2 The solid products are classified on the basis of their chemical composition. However, their cross-sectional configurations are another consideration that must be selected and specified when ordering.

A3 Description of Process

A3.1 General. Consumable inserts are used for root pass welding from one side where consistent high quality welds are required with minimum repairs or rejects and where welding conditions may be less than optimum, such as a confined space for welding or the necessity for maximum insurance against weld cracks, etc. They usually are used in pipe joints but are often used also in pressure vessel and structural applications. The classes of consumable inserts most commonly used are illustrated in Fig. 1. The various classes are normally available in the sizes listed in Tables 5 through 8.

A3.2 Purging. To provide welded piping systems with the integrity required by existing codes, the weld joint must provide a full penetration joint with weld metal of consistently good quality. One method of obtaining this high level of quality is the use of preplaced consumable inserts in conjunction with a specific joint configuration together with a suitable protective gas back purge. The GTAW process, either manual or automatic, is generally used to consume or fuse the consumable insert. This method is particularly adaptable to conditions encountered in pipe welding but may be applied to flat plate type joints. The main consideration is that a full penetration butt weld is required when the accessibility is limited to one side or when the back side of the joint is inaccessible for welding. In order to obtain a suitably smooth, uniform back side weld surface without crevices or oxidation, a purge must be established using a suitable protective gas. Since the second and third passes in the joint may take the previously deposited consumable insert root pass above the oxidizing temperature of the base and filler metal, it may be necessary to maintain the purge until three layers or $^{3}/_{16}$ in. (4.8 mm) root thickness is obtained.

A3.3 Ferrite Content. For use of austenitic consumable inserts, the purchaser should specify in his purchase order the applicable limits for ferrite or the ferrite number he requires in the consumable inserts. In general, the limits applied to the matching filler metal type being used in the joint are recommended for the consumable insert. The ferrite shall be measured by means of a suitable instrument that has been calibrated in accordance with AWS A4.2-74, Standard Procedures for Calibrating Magnetic Instruments to Measure the Delta Ferrite Content of Austenitic Stainless Steel Weld Metal.

A3.4 Joint Configuration. It should be noted that the joint end preparation configuration must be compatible with the shape of the consumable insert used in order to obtain consistent high quality, particularly under field welding conditions.

For all shape configurations, the butt gap in the insert (fitted, ready for tack welding) shall not exceed $^{1}/_{16}$ in. (1.6 mm).

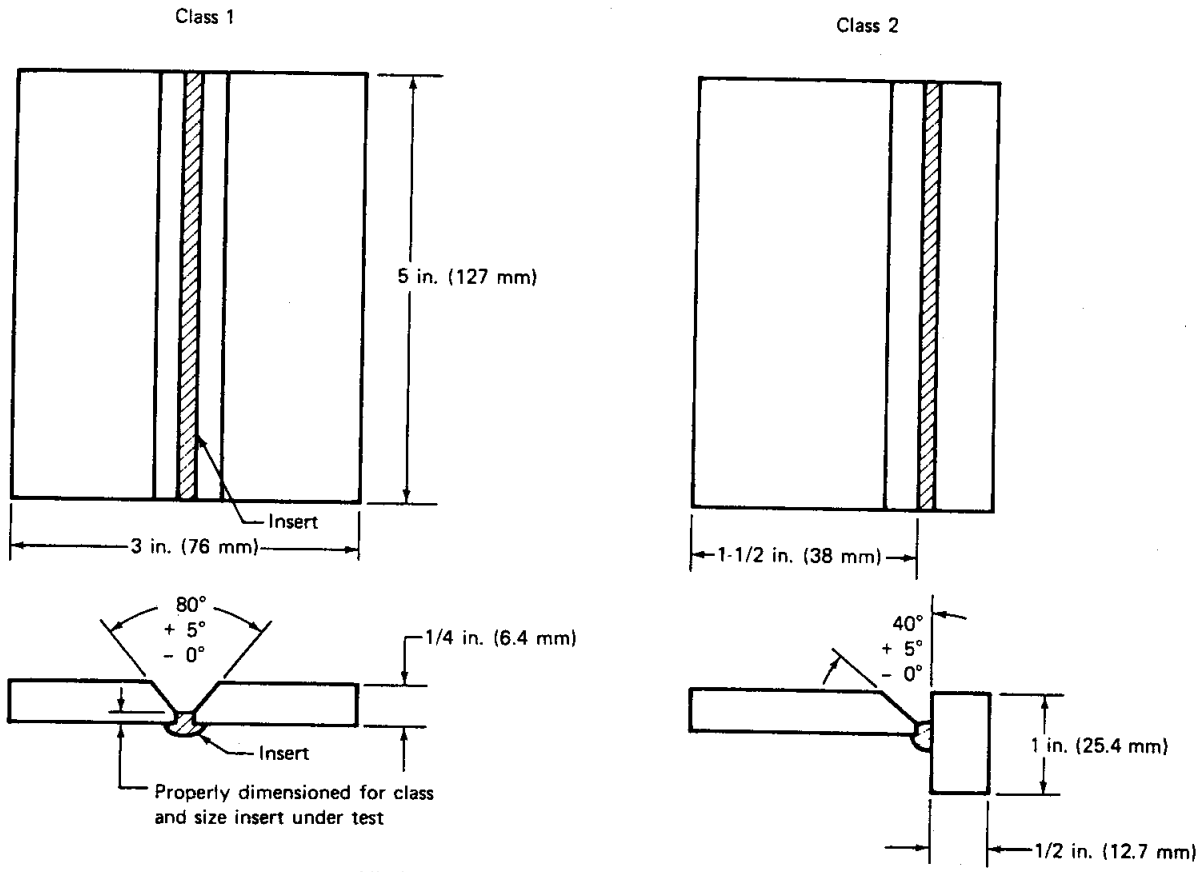

All dimensions, excluding angles, are in inches (millimeters).

Notes:

1. Base plate shall be of composition similar to the insert.
2. One-half of joint shall be welded in flat position; the remainder, in the vertical position. All welding shall be done on groove side.
3. Argon gas shall be used for purging and shielding electrode and back side of weld.
4. Standard techniques and procedures for fusing the insert shall be followed at all times.
5. Upon completion of fusion, the joint shall be visually examined for compliance with the following:
   (1) The contour of the backside surface of fused insert.
      (a) Reinforcement shall not exceed 3/32 in. (2.4 mm).
      (b) Concavity shall not exceed 1/32 in. (0.8 mm).
      (c) The contour shall have a uniform radius and shall blend smoothly into the base metal.
   (2) The fused insert shall also be free of linear indications, as revealed by liquid penetrant inspection with non-water washable penetrant.

FIG. A1 FUSIBILITY TEST JOINT

A4 Ordering Information

When ordering inserts, the following items should be included:

(1) Title, number, and date of this specification

(2) Classifications, shape, and size, including pipe schedule

(3) Required ferrite content or number (as applicable)

A5 Ventilation During Welding

A5.1 Three major factors in arc and gas welding that govern the amount of contamination to which welders or welding operators may be exposed to are:

A5.1.1 Dimensions of space in which welding is to be done (with special regard to height of ceiling).

A5.1.2 Number of welders or welding operators working in that space.

A5.1.3 Possible evolution of hazardous fumes, gases, or dusts, according to the metals and shielding gases involved.

A5.2 American National Standard Z49.1, Safety in Welding and Cutting, discusses the ventilation required during welding and should be referred to for details. Attention is particularly drawn to Section 8, Health Protection and Ventilation.

A6 Usability

A6.1 The control of chemical composition is generally sufficient to insure usability of these classifications. However, a fusibility test is sometimes specified. Figure A1 illustrates a typical fusibility test plate.

A6.2 A complete description of the characteristics of the consumable insert classifications covered by this specification is beyond the scope of this document. For further information, see AWS D10.4-79, Recommended Practices for Welding Austenitic Chromium-Nickel Stainless Steel Piping and Tubing, and AWS D10.11-79, Recommended Practices for Root Pass Welding and Gas Purging.

SPECIFICATION FOR FLUXES FOR BRAZING AND BRAZE WELDING

SFA-5.31

(Identical with AWS Specification A5.31-92)

1. Scope

This specification prescribes requirements for the classification of brazing fluxes used with brazing or braze welding filler metals such as those classified in ANSI/AWS A5.8, *Specification for Filler Metals for Brazing and Braze Welding.*

PART A — GENERAL REQUIREMENTS

2. Classification

2.1 The brazing fluxes covered by this specification are classified according to the filler metal, form, and activity temperature range for which they are applicable as specified in Table 1.

2.2 Materials classified under one classification shall not be classified under any other classification of this specification.

3. Acceptance

Acceptance of the material shall be based on meeting the requirements of this specification.

4. Certification

By affixing the AWS specification and classification to the unit package, the manufacturer certifies that the flux meets the requirements of this specification. (See Section A3.)

5. Units of Measure and Rounding-Off Procedure

5.1 U.S. customary units are the standard units of measure in this specification except where SI units are noted for flux sample weights. The SI units are given as equivalent values to the U.S. customary units. The standard sizes and dimensions in the two systems are not identical and for this reason conversion from a standard size or dimension in one system will not always coincide with a standard size or dimension in the other. Suitable conversions encompassing standard sizes of both can be made, however, if appropriate tolerances are applied in each case.

5.2 For purposes of determining conformance with this specification, an observed or calculated value shall be rounded to the nearest unit in the last right-hand place of figures used in expressing the limiting value for other quantities in accordance with the rounding-off method given in ASTM E29, *Recommended Practice for Using Significant Digits in Test Data to Determine Conformance with Specifications.*[1]

PART B — TESTS, PROCEDURES, AND REQUIREMENTS

6. Summary of Tests

6.1 The tests required for each flux classification are specified in Table 2. These tests include tests for the water content, maximum particle size, adherence to a test specimen, and the presence or absence of sodium glare when heating with a torch flame. They are also used to determine the fluidity at high temperature, fluxing action, filler metal flow, and the active life of the flux at high temperature. The base metal for the test specimen, the filler metal and the testing procedures

[1] ASTM standards can be obtained from the American Society for Testing Materials, 100 Barr Harbor Drive, West Conshohocken, PA 19428-2959.

TABLE 1
CLASSIFICATION OF BRAZING FLUXES WITH BRAZING OR BRAZE WELDING FILLER METALS

AWS Classification*	Form	Filler Metal Type	Activity Temperature Range °F	Activity Temperature Range °C
FB1-A	Powder	BAlSi	1080–1140	580–615
FB1-B	Powder	BAlSi	1040–1140	560–615
FB1-C	Powder	BAlSi	1000–1140	540–615
FB2-A	Powder	BMg	900–1150	480–620
FB3-A	Paste	BAg and BCuP	1050–1600	565–870
FB3-C	Paste	BAg and BCuP	1050–1700	565–925
FB3-D	Paste	BAg, BCu, BNi, BAu & RBCuZn	1400–2200	760–1205
FB3-E	Liquid	BAg and BCuP	1050–1600	565–870
FB3-F	Powder	BAg and BCuP	1200–1600	650–870
FB3-G	Slurry	BAg and BCuP	1050–1600	565–870
FB3-H	Slurry	BAg	1050–1700	565–925
FB3-I	Slurry	BAg, BCu, BNi, BAu & RBCuZn	1400–2200	760–1205
FB3-J	Powder	BAg, BCu, BNi, BAu & RBCuZn	1400–2200	760–1205
FB3-K	Liquid	BAg & RBCuZn	1400–2200	760–1205
FB4-A	Paste	BAg and BCuP	1100–1600	595–870

*Flux 3B in the Brazing Manual, 3rd Edition, 1976 has been discontinued. Type 3B has been divided into types FB3-C and FB3-D.

NOTES:
a. The selection of a flux designation for a specific type of work may be based on the form, the filler metal type, and the classification above, but the information here is generally not adequate for flux selection. Refer to Section A6 and the latest issue of the Brazing Handbook for further assistance.
b. See 11.2 and 11.3 for the difference between paste flux and slurry flux.

TABLE 2
REQUIRED TESTS

AWS Flux Classification	Form	Water Content	Particle Test	Adherence	Sodium Glare	Fluidity	Fluxing Action	Flow	Life
FB1-A	Powder	X				X	X	X	
FB1-B	Powder	X				X	X	X	
FB1-C	Powder	X				X	X	X	
FB2-A	Powder	X				X	X	X	
FB3-A	Paste	X	X	X	X	X	X	X	X
FB3-C	Paste	X	X	X	X	X	X	X	X
FB3-D	Paste	X	X	X	X	X	X	X	X
FB3-E	Liquid	X	X				X	X	
FB3-F	Powder	X			X	X	X	X	X
FB3-G	Slurry	X	X	X	X	X	X	X	X
FB3-H	Slurry	X	X	X	X	X	X	X	X
FB3-I	Slurry	X	X	X	X	X	X	X	X
FB3-J	Powder	X			X	X	X	X	X
FB3-K	Liquid		X				X	X	
FB4-A	Paste	X	X	X	X	X	X	X	X

TABLE 3
CONDITIONS FOR FLUXING ACTION, FLOW, AND LIFE TESTS

AWS Flux Classification	AWS Filler Metal Classification	Base Metal		Test Temperature[1]		Flow Area	
		Common Name	UNS Number[2]	°F	°C	Sq. in.	Sq. mm
FB1-A	BAlSi-4	3003 aluminum	A93003	1135	613	0.2	129
FB1-B	BAlSi-4	3003 aluminum	A93003	1135	613	0.2	129
FB1-C	BAlSi-4	3003 aluminum	A93003	1135	613	NR[3]	NR[3]
FB2-A	BMg-1	AZ31B magnesium	M11311	1130	610	NR[3]	NR[3]
FB3-A	BAg-7	1008 carbon steel	G10080	1300	705	0.25	161
FB3-C	BAg-24	304 stainless steel	S30400	1400	760	0.25	161
FB3-D	RBCuZn-D	304 stainless steel	S30400	1850	1010	0.25	161
	BNi-2	304 stainless steel	S30400	1900	1040	0.25	161
FB3-E	BAg-7	304 stainless steel	S30400	1300	705	NR[3]	NR[3]
FB3-F	BAg-7	1008 carbon steel	G10080	1300	705	0.25	161
FB3-G	BAg-7	1008 carbon steel	G10080	1300	705	0.25	161
FB3-H	BAg-24	1008 carbon steel	G10080	1400	760	0.25	161
FB3-I	RBCuZn-D	304 stainless steel	S30400	1850	1010	0.25	161
	BNi-2	304 stainless steel	S30400	1900	1040	0.25	161
FB3-J	RBCuZn-D	304 stainless steel	S30400	1850	1010	0.25	161
	BNi-2	304 stainless steel	S30400	1900	1040	0.25	161
FB3-K	RBCuZn-D	1008 carbon steel	G10080	1750	955	NR[3]	NR[3]
FB4-A	BAg-6	C613 aluminum bronze	C61300	1525	830	0.25	161

NOTES:
1. Temperature tolerances shall be ± 15°F (±8°C).
2. ASTM/SAE Unified Number System for Metals and Alloys, published by SAE, Inc., 400 Commonwealth Drive, Pittsburgh, Pennsylvania 15096.
3. NR — No flow requirement. Wetting of base metal by the filler metal is all that is required.

to be used, and the results required are given in Part B, Sections 8 through 18 and Table 3.

6.2 The shelf-life requirement shall be a minimum of six (6) months from date of manufacture when stored in its original unopened container. Alternate minimum storage periods shall be as agreed upon between the supplier and purchaser.

7. Retests

If any test fails to meet its requirement, that test shall be repeated twice. The results of both tests shall meet the requirement. Samples for retest shall be taken from the original test sample or from a new test sample.

8. Test Specimen

8.1 The test specimen, Figure 1, shall be a rectangular sheet, 1.25 in. (30 mm) wide, 2.5 in. (60 mm) long, and approximately 0.040 in. (1 mm) thick, of the base metal given in Table 3.

8.2 Except as noted in 8.3 and 8.4, the surface of the test specimen shall be prepared by degreasing, polishing with a grade 200 abrasive paper or cloth, washing, drying, wiping with a cloth soaked in light petroleum oil, and wiping dry with a clean dry cloth.

8.3 The surface of the aluminum test specimen shall be prepared by degreasing, caustic etching [5% NaOH at 170°F (77°C)], desmuting (500 HNO_3 at room temperature), water rinsing, and drying.

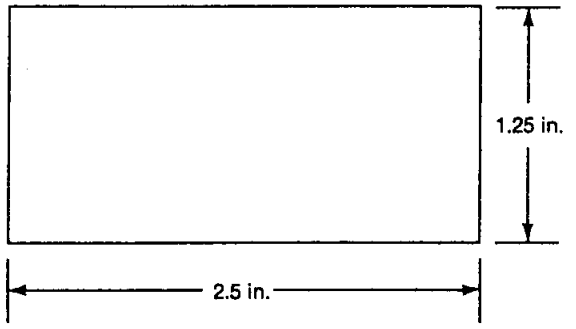

S.I. Equivalents	
in.	mm
0.040	1
1.25	30
2.50	60

FIG. 1 TEST SPECIMEN APPROXIMATELY 0.040 IN. THICK

8.4 The surface of the magnesium test specimen shall be prepared by degreasing, immersed for 2 minutes in a ferric nitrate bright pickle solution [1.5 lb (0.68 kg) chromic acid, 5.33 oz (0.15 kg) ferric nitrate, 0.5 oz (0.014 kg) potassium fluoride per gallon of water at 60–100°F (16–38°C)], water rinsing, and drying.

9. Flux Sample

The extraction of an unmodified flux sample shall be preceded by thorough mixing to a smooth, uniform consistency.

10. Filler Metal

10.1 For all flux classifications, except FB3-D, FB3-I and FB3-J when testing with the BNi-2 filler metal, the filler metal shall be a $^1/_2$ in. (13 mm) length of $^1/_{16}$ in. (1.6 mm) diameter wire of the AWS classification given in Table 3.

10.2 For the flux classifications FB3-D, FB3-I and FB3-J when testing with the BNi-2 filler metal, the filler metal shall be 0.2 gm of powder or rod.

11. Water Content Test

11.1 The water content shall be determined with the following procedure (all weights shall be determined to the nearest 0.01 gm):

(1) Determine the weight of a dry 50 ml glass beaker.

(2) Place a 3 gm sample of the flux into the beaker.

(3) Determine the weight of the wet flux by weighing the flux and beaker, and subtracting the weight of the beaker.

(4) Place the beaker in a vacuum assist desiccator containing activated silica gel mixed with a small amount of blue gel.

(5) Cover the desiccator and dry with vacuum assist for 48 hours.

(6) Determine the weight of the dry flux by weighing the flux and beaker, and subtracting the weight of the beaker.

(7) Calculate the water content as follows:

$$\text{Water content (\%)} = \frac{(\text{wet flux wt.} - \text{dry flux wt.}) \times (100)}{\text{wet flux wt.}}$$

11.2 Paste fluxes shall have a water content of 15 to 35 percent.

11.3 Slurry fluxes shall have a water content of 30 to 60 percent.

11.4 Liquid fluxes shall have a water content of 82 to 90 percent.

11.5 Powder fluxes shall have a moisture content of less than or equal to 5 percent.

12. Particle Test

12.1 The particle consistency of a paste flux is acceptable when the entire amount of a 60 gm sample will pass through a U.S.A. Standard Testing Sieve 425 μm (No. 40). The screen shall conform to ASTM E11, *Specification for Wire-Cloth Sieves for Testing Purposes.* Heating at 180°F (82°C) for one hour before testing is permissible.

12.2 The particle consistency of a slurry flux is acceptable when the entire amount of a 60 gm sample will pass through a U.S.A. Standard Testing Sieve 106 μm (No. 140).

12.3 Liquid fluxes shall not exhibit any visible particles when examined without magnification.

13. Adherence Test

The adherence characteristics of the flux shall be determined with the following procedures:

13.1 For temperatures below the activity temperature range the following apply:

13.1.1 Using a brush, apply a layer of flux approximately $^{1}/_{32}$ in. (0.8 mm) thick to one surface of a test specimen, see Figure 1, and for base metal see Table 3.

13.1.2 Examination No. 1. Examine the surface for areas of nonwetting.

13.1.3 Allow the flux to dry in air at room temperature with the longitudinal axis of the test specimen inclined at approximately 60° from the horizontal.

13.1.4 Examination No. 2. Examine surface for areas of flux loss or retraction.

13.1.5 With the same test specimen inclined at approximately 60°, heat in an air atmosphere furnace which has been preheated to 100°F (55°C) below the minimum activity temperature of Table 1, hold at temperature for three minutes, and air cool to room temperature.

13.1.6 Examination No. 3. Examine surface for areas of flux loss or retraction.

13.2 The results of the tests are acceptable when each of the three examinations indicates that the flux coating is continuous, i.e., free from areas of nonwetting or areas of flux loss or retraction.

13.3 Minimum Activity Temperature

13.3.1 Apply 1.4 gm of flux as a uniform coating to one surface of the test specimen, Figure 1, of base metal specified in Table 3, and dry in air at room temperature.

13.3.2 With the test specimen inclined at approximately 60°, heat in air in a furnace preheated to the minimum activity temperature specified in Table 1, hold at temperature for three minutes, then cool to room temperature in still air.

13.4 The result of the test is acceptable when 80 percent or more of the test specimen surface remains covered and protected from high-temperature oxidation by the flux.

14. Sodium Glare Test

14.1 One surface of a test specimen, Figure 1 of base metal specified in Table 3, shall be generously coated with flux. It shall then be heated with an oxyacetylene flame, adjusted to a slightly acetylene-rich (reducing) condition, to approximately 100°F (56°C) above the minimum activity temperature of the flux being evaluated, see Table 1.

14.2 The result of the test is acceptable if an orange glare from the flux is not visible during heating. In cases of doubt, the sodium content shall not exceed 0.04 percent, as determined by spectrochemical analysis or an equivalent mutually acceptable process.

15. Fluidity Test (for all fluxes except FB3-E and FB3-K)

15.1 The fluidity of the flux at high temperature shall be determined with the following procedure:

15.1.1 Place a 10 gm sample of flux in a nonreactive crucible.

15.1.2 Heat the crucible in a preheated furnace with an air atmosphere to the minimum activity temperature of Table 1 and hold at temperature for five minutes.

15.1.3 Remove the crucible and immediately observe the degree of fluidity of the molten flux at that temperature by tilting the crucible.

15.1.4 Heat the crucible in a preheated furnace with an air atmosphere to the maximum activity temperature of Table 1 and hold at that temperature for 10 minutes.

15.1.5 Cool as rapidly as possible by resetting the furnace controls to the minimum activity temperature.

15.1.6 When the furnace thermocouple indicates that the furnace is at the minimum activity temperature, remove the crucible and observe the degree of fluidity at that temperature by again tilting the crucible.

15.2 The result of the test is acceptable if the fluidity at the second observation is approximately the same as that at the first observation.

16. Fluxing Action Test

16.1 For all fluxes except FB3-K the fluxing action shall be determined with the following procedure:

16.1.1 Apply 1.4 gm of flux as a uniform coating to one surface of the test specimen, Figure 1, of base metal specified in Table 3. Place the prefluxed filler metal sample (see 10.1, 10.2, and Table 3) on the test specimen, and dry in air at room temperature.

16.1.2 With the test specimen in a horizontal position, heat in air to the furnace temperature in a furnace preheated to the minimum activity temperature of Table 1, hold at temperature for two minutes, and air cool to room temperature.

16.1.3 Clean the test specimen by soaking in warm water.

16.2 For FB3-K flux, fluxing action shall be determined with the following procedure:

16.2.1 Set up an oxyacetylene, liquid flux brazing station as follows:

(1) Use a No. 48 drill size torch tip.

(2) Set both oxygen and acetylene pressure at 7 psig.

(3) Place filler metal on a test specimen which has a blue oxidized surface.

(4) With the tip 5 in. (127 mm) above the test specimen, heat to 1400°F (760°C), and air cool to room temperature.

16.2.2 Use temperature indicating crayons, or equivalent, to measure temperature.

16.3 The result of the test is acceptable if the test specimen surface that was coated with flux and the filler metal surface are free of high temperature oxidation as indicated by lack of discoloration of the sample.

17. Flow Test

17.1 For all brazing fluxes except FB3-K the extent of filler metal flow shall be determined with the following procedure:

17.1.1 Apply 1.4 gm of flux as a uniform coating to one surface of the test specimen, Figure 1 of base metal specified in Table 3, and place the prefluxed filler metal on the test specimen. Dry in air at room temperature.

17.1.2 With the test specimen in a horizontal position, heat in air in a furnace preheated to the test temperature shown in Table 3, hold for five minutes at the test temperature, remove the test specimen and air cool to room temperature.

17.1.3 Clean the test specimen by soaking in warm water.

17.2 For FB3-K flux, the extent of filler metal flow shall be determined as follows:

17.2.1 Set up an oxyacetylene, liquid flux brazing station as follows:

(1) Use a No. 48 drill size torch tip.

(2) Set both oxygen and acetylene pressure at 7 psig.

(3) Place the filler metal on the test specimen.

(4) With the torch tip 5 in. (125 mm) above the test specimen, heat to 1750°F (955°C) and air cool.

17.2.2 Use temperature indicating crayon, or equivalent, to measure temperature.

17.3 The result of the test is acceptable if the filler metal flow area is equal to or greater than the flow area shown in Table 3. Wetting of the base metal by the filler metal is required for fluxes FB1-C, FB2-A, FB3-E, and FB3-K, but there are no specific flow area requirements.

18. Life Test

18.1 The ability of the flux to protect the base metal surface at high temperature shall be determined with the following procedure:

18.1.1 Apply approximately 1.4 gm of flux as a uniform coating to one surface of the test specimen, Figure 1, of base metal specified in Table 3, and dry in air at room temperature.

18.1.2 Heat in the furnace preheated to the test temperature shown in Table 3 with the test specimen in a horizontal position, and hold for ten minutes at the test temperature.

18.1.3 Place the unfluxed filler metal on the test specimen in the furnace.

18.1.4 Continue to heat until the furnace returns to the test temperature, hold for one minute at that temperature, remove the test specimen, and air cool to room temperature.

18.1.5 Clean the test specimen by soaking in warm water.

18.2 The result of the test is acceptable if the filler metal has wet the test specimen. There is no specific flow area requirement.

PART C — MANUFACTURE, IDENTIFICATION, AND PACKAGING

19. Method of Manufacture

The brazing fluxes classified according to this specification may be manufactured by any method that will produce a brazing flux that meets the requirement of this specification. Chemicals of technical grade, or better, shall be used.[2]

[2] For further description of the classification of grades of chemicals, refer to Manufacturing Chemists Association, 1825 Connecticut Avenue N.W., Washington, DC 20009.

20. Forms

20.1 Standard forms for brazing fluxes shall be powder, paste, slurry, or liquid, as shown in Table 1.

20.2 A flux in paste form shall meet the requirements of 11.2.

20.3 A flux in slurry form shall be suitable for use with automatic flux dispensing equipment and meet the requirements of 11.3.

20.4 A flux in liquid form shall be suitable for use with flux spraying equipment and meet the requirements of 11.4.

20.5 A flux in powder form shall meet the requirements of 11.5.

21. Packaging

21.1 Brazing fluxes shall be suitably packaged to protect them from damage during shipment and storage under normal conditions.

21.2 Flux containers and closures shall be made of materials that do not noticeably react with the flux during storage for a minimum period of six months after packaging.

21.3 Sealing shall be adequate to prevent loss or contamination of the flux components under normal handling conditions.

21.4 Standard package weights shall be as agreed between purchaser and supplier.

22. Marking of Packages

22.1 The following product information (as a minimum) shall be legibly marked on the outside of each unit package:

(1) AWS specification and classification numbers
(2) Supplier's name and trade designation
(3) Volume or net weight
(4) Lot, control, or batch number
(5) Date of manufacture

22.2 The following precautionary information (as a minimum) shall be prominently displayed in legible print on all applicable packages of flux, including individual applicable unit packages enclosed within a larger package.

WARNING:

CONTAINS FLUORIDES. Protect yourself and others. Read and understand this label.

FUMES AND GASES CAN BE DANGEROUS TO YOUR HEALTH. BURNS EYES AND SKIN ON CONTACT. CAN BE FATAL IF SWALLOWED.

- Before use, read, understand, and follow manufacturer's instructions, Material Safety Data Sheets (MSDSs), and your employer's safety practices.
- Keep your head out of the fumes.
- Use enough ventilation, exhaust at the work, or both, to keep fumes and gases from your breathing zone and the general area.
- Avoid contact of flux with eyes and skin.
- Do not take internally.
- Keep out of the reach of children.
- See American National Standard Z49.1, *Safety in Welding and Cutting* published by the American Welding Society, 550 N.W. LeJeune Road, P.O. Box 351040, Miami, Florida 33135; *OSHA Safety and Health Standards, 29 CFR 1910,* available from the U.S. Government Printing Office, Washington, DC 20402.
- **First Aid:** If flux contacts eyes, flush immediately with clean water for at least 15 minutes. If swallowed, induce vomiting. Never give anything by mouth to an unconscious person. Call a physician.

DO NOT REMOVE THIS LABEL

Appendix
Guide to AWS Specification for Fluxes for Brazing and Braze Welding

(This Appendix is not a part of ANSI/AWS A5.31-92, *Specifcation for Fluxes for Brazing and Braze Welding,* but is included for information only.)

A1. Introduction

The purpose of this guide is to correlate the flux classifications with their intended applications so the specification can be used effectively. Reference to appropriate base metals, filler metals, and brazing processes is made whenever that can be done and when it would be useful. Such references are intended only as examples rather than complete listings of the materials and processes for which each brazing flux is suitable.

A2. Classification System

The system for identifying the flux classifications in this specification is based on three factors: applicable base metal, applicable filler metal, and activity temperature range. The letters FB at the beginning of each classification designation stands for "Flux for Brazing or Braze Welding." The third character is a number that stands for a group of applicable base metals. The fourth character, a letter, designates a change in form and attendant composition within the broader base metal classification.

A3. Certification

The act of placing the AWS specification and classification designation on the packaging enclosing the product constitutes the supplier's (manufacturer's) certification that the product meets all of the requirements of the specification.

The only testing requirement implicit in this certification is that the manufacturer has actually conducted the tests required by the specification on material that is representative of that being shipped and that the representative material tested met the requirements of the specification. Representative material, in this case, is any production run of that classification using the same formulation and manufacturing procedures. "Certification" is not to be construed to mean that tests of any kind were necessarily conducted on samples of the specific material shipped. Tests on such material may, or may not, have been made. The basis for the certification required by the specification is the classification tests of "representative material" cited above.

A4. Ventilation During Brazing

A4.1 Five major factors govern the quantity of fumes in the atmosphere to which brazers, brazing operators, and other personnel are exposed during brazing:

(1) Dimensions of the space in which brazing is done (with special regard to the height of the ceiling)

(2) Number of brazers and brazing operators working in that space

(3) Rate of evolution of fumes, gases, or dust, according to the materials and processes used

(4) The proximity of the brazers, brazing operators, and other persons to the fumes as the fumes issue from the brazing zone, and to the gases and dusts in the space in which they are working

(5) The ventilation provided to the space in which the brazing is done

A4.2 American National Standard Z49.1, *Safety in Welding and Cutting,* published by the American Welding Society, discusses the ventilation that is required during brazing and should be referred to for details. Attention is drawn particularly to the section of that document on Ventilation.

A5. Brazing Considerations

A5.1 Successful brazing requires that the surfaces of the workpieces and the filler metal be free of oxide, tarnish, or other foreign matter at the time the brazing filler metal flows into the joint. Proper prebraze cleaning is an initial step in any brazing process; however, additional protection and cleaning is required to maintain this condition throughout the brazing procedure. Fluxes may be used to maintain cleanliness and protection from oxidation. Controlled atmospheres, including vacuum, and active deoxidizing elements are alternate methods of providing the necessary surface cleanliness during brazing.

A5.2 Brazing fluxes are mixtures of chemical compounds which may include inorganic salts and mild acids selected for their ability to provide chemical cleaning or protection of the faying surfaces and the filler metal during brazing. Fluxes must perform this protective, cleaning, and fluxing action with the specific filler metals being used, in conjunction with the other brazing variables; such as, base metal, brazing process, mass of the workpieces, and method of flux application. For further information, refer to the *Brazing Handbook*, published by the American Welding Society.

A6. Description and Intended Use of Brazing Fluxes

A6.1 FB1-A is a brazing flux in powder form intended for torch and furnace brazing of aluminum and its brazeable alloys. It consists primarily of fluorides and chlorides of some of the alkali metals. Water or alcohol may be used for thinning.

A6.2 FBl-B is a brazing flux in powder form intended for furnace brazing of aluminum and its brazeable alloys. The lower end of its activity temperature range is slightly lower than that of the FB1-A classification. It consists primarily of fluorides and chlorides of some of the alkali metals. Water or alcohol may be used for thinning.

A6.3 FB1-C is a brazing flux in powder form intended for salt-bath dip brazing of aluminum and its brazeable alloys. The lower end of its activity temperature range is much lower than that of the FB1-A and FB1-B classifications. It consists primarily of fluorides and chlorides of some of the alkali metals. Water should be avoided in the flux or removed prior to immersion of the brazement in the salt bath.

A6.4 FB2-A is a brazing flux in powder form intended for salt-bath dip brazing of magnesium alloys whose designators start with AZ. It consists primarily of fluorides and chlorides of some of the alkali metals. Water should be avoided in the flux or removed prior to immersion of the brazement in the salt bath.

A6.5 FB3-A is a general purpose brazing flux in paste form intended for use with most brazing processes in the brazing of steels, copper, copper alloys, nickel, and nickel alloys. It is not suitable for aluminum bronze or other base metals containing alloying elements, such as aluminum, which form refractory oxides. It consists primarily of boric acid, borates, and complex fluorine compounds. Water is used for thinning.

A6.6 FB3-C is a brazing flux in paste form similar to FB3-A, except that the activity temperature range extends to a higher temperature, and it may contain elemental boron. Water is used for thinning.

A6.7 FB3-D is a brazing flux in paste form intended for torch, furnace and induction brazing of steels, nickel and its alloys, and carbides using high-temperature filler metals. It consists primarily of boric acid, borates, and complex fluorine compounds. It may contain elemental boron. Water is used for thinning.

A6.8 FB3-E is a low-activity liquid brazing flux used in the torch brazing of jewelry or to augment borderline furnace brazing atmospheric conditions. Flux usually is applied by dipping or by the use of semi- or fully-automatic spray dispensing equipment. The flux constituents are similar to those in FB3-D fluxes.

A6.9 FB3-F is a brazing flux somewhat similar to the FB3-A flux, except that no vehicle is added to the powder during manufacture. In application, water maybe used as a thinning vehicle.

A6.10 FB3-G is a brazing flux in slurry form for use with automatic spray dispensing equipment. The general areas of application are similar to those of FB3-A flux. Water may be used as the thinning vehicle.

A6.11 FB3-H is a brazing flux in slurry form for use with automatic spray dispensing equipment. The general areas of application are similar to those of the FB3-C flux. The flux typically contains complex borates and fluoride compounds plus powdered boron. Water may be used as the thinning vehicle.

A6.12 FB3-I is a brazing flux in slurry form for use with automatic spray dispensing equipment. The general areas of application are similar to those of the FB3-D flux. The flux typically contains complex borates and fluoride compounds plus powdered boron. Water may be used as the thinning vehicle.

A6.13 FB3-J is a brazing flux in powder form for areas of application similar to those of the FB3-D flux. The flux typically contains complex borates and fluoride compounds plus powdered boron. Water may be used as the thinning vehicle.

A6.14 FB3-K is a liquid flux used almost exclusively in torch brazing. The fuel gas is passed through the container of liquid flux entraining flux in the fuel gas. The flux is applied by the flame where needed on base metals such as carbon steels, low alloy steels, cast iron, copper and copper alloys, nickel and nickel alloys, and precious metals. The flux consists primarily of liquid borates.

A6.15 FB4-A is a brazing flux in paste form intended for brazing of copper alloys and other base metals containing up to 9 percent aluminum, e.g., aluminum bronze. It may also be suitable for base metals containing up to 3% titanium or other metals that form refractory oxides. It consists primarily of borates, complex fluorine compounds, and complex chlorine compounds. Water is used for thinning.

SPECIFICATION FOR WELDING SHIELDING GASES 01

SFA-5.32

(Identical with AWS Specification A5.32/A5.32M-97.)

1. Scope

This specification prescribes requirements for the classification of shielding gases. Gases may be supplied in either gaseous or liquid form, but when used in welding, the shielding is always in the gaseous form. Gas shielded arc welding processes include, but are not limited to: manual, semiautomatic, mechanized, and automatic gas tungsten arc welding (GTAW), gas metal arc welding (GMAW), flux cored arc welding (FCAW), electrogas welding (EGW), and plasma arc welding (PAW).

PART A — GENERAL REQUIREMENTS

2. Normative References

2.1 ASTM Standards.[1] The following ASTM standards are referenced in the mandatory sections of this document.

(a) ASTM E 29, *Standard Practice for Using Significant Digits in Test Data to Determine Conformance with Specifications*

(b) ASTM E 260, *Standard Practice for Packed Column Gas Chromatography*

2.2 CGA Publications.[2] The following CGA standards are referenced in the mandatory sections of this document.

(a) G-4.3, *Commodity Specification for Oxygen*

(b) G-5.3, *Commodity Specification for Hydrogen*

(c) G-6.2, *Commodity Specification for Carbon Dioxide*

(d) G-9.1, *Commodity Specification for Helium*

(e) G-10.1, *Commodity Specification for Nitrogen*

(f) G-11.1, *Commodity Specification for Argon*

(g) P-15, *Filling of Industrial and Medical Nonflammable Compressed Gas Cylinders*

3. Classification

3.1 The shielding gases covered by the A5.32/A5.32M specification are classified using a system that is independent of U.S. Customary Units and the International System of Units (SI). Classification is according to chemical composition of the shielding gas as specified in 13.1.

3.2 Gases classified under one classification shall not be classified under any other classification in this specification. Individual gases shall meet or exceed the requirements of Table 1.1

3.3 The gases classified under this specification are intended for use with the gas shielded arc welding processes listed in the Scope. This does not prohibit their use with any other process for which they are found suitable.

4. Acceptance

Acceptance[3] of the gases by the user shall be in accordance with the tests and requirements of Parts B and C of this specification.

5. Certification

By affixing the AWS specification and classification designations on the packaging enclosing the product, the supplier (manufacturer) certifies that the product meets all of the requirements of the specification.[4]

[1] ASTM standards can be obtained from ASTM, 100 Barr Harbor Drive, West Conshohocken, PA 19428-2959.

[2] CGA publications can be obtained from Compressed Gas Association, Inc., 1725 Jefferson Davis Highway, Suite 1004, Arlington, VA 22202-4102.

[3] See Section A3 (in the Annex) for more information.

[4] See Section A4 (in the Annex) for further information concerning certification and the testing called for to meet this requirement.

TABLE 1
GAS TYPE, PURITY, AND DEW POINT REQUIREMENTS FOR SHIELDING GAS COMPONENTS

Gas	AWS Classification	Product State	Minimum Purity, %	Maximum Moisture,(1) ppm	Dew Point Maximum Moisture at 1 Atmosphere °F	°C	CGA Class	
Argon	SG-A	Gas	99.997	10.5	−76	−60	Type I	G-11.1 Grade C
		Liquid	99.997	10.5	−76	−60	Type II	G-11.1 Grade C
Carbon Dioxide	SG-C	Gas	99.8	32	−60	−51		G-6.2 Grade H
		Liquid	99.8	32	−60	−51		G-6.2 Grade H
Helium	SG-He	Gas	99.995	15	−71	−57	Type I	G-9.1 Grade L
		Liquid	99.995(2)	15	−71	−57	Type II	G-9.1 Grade L
Hydrogen	SG-H	Gas	99.95	32	−60	−51	Type I	G-5.3 Grade B
		Liquid	99.995(3)	32	−60	−51	Type II	G-5.3 Grade A
Nitrogen	SG-N	Gas	99.9	32	−60	−51	Type I	G-10.1 Grade F
		Liquid	99.998	4	−90	−68	Type II	G-10.1 Grade L
Oxygen	SG-O	Gas	99.5	Not Applicable	−54	−48	Type I	G-4.3 Grade B
		Liquid	99.5	Not Applicable	−82	−63	Type II	G-4.3 Grade B

NOTES:
(1) Moisture specifications are guaranteed at full cylinder pressure, at which the cylinder is analyzed.
(2) Including neon.
(3) Including helium.

6. Units of Measure and Rounding-Off Procedure

6.1 This specification uses U.S. Customary Units and the SI Units. The measurements are not exact equivalents; therefore each system must be used independently of the other without combining values in any way. The specification with the designation of A5.32 uses the U.S. Customary Units. The specification with the designation of A5.32M uses SI Units. The latter are shown in appropriate columns in tables and in figures, and within brackets [ ] when used in the text.

6.2 For the purpose of determining conformance with this specification, values shall be rounded to the nearest unit in accordance with the rounding-off method given in ASTM E 29, *Standard Practice for Using Significant Digits in Test Data to Determine Conformance with Specifications.*

PART B — TESTS, PROCEDURES, AND REQUIREMENTS

7. Summary of Tests

Compositional analysis of the shielding gas is the only test required for classification of a product under this specification. Tests required for each single gas are specified in Table 2. The purpose of these tests is to determine the purity and dew point of the shielding gas.

8. Retest

If any gas fails to meet its requirements, that test shall be repeated twice. The results of both retests shall meet the requirement of this specification.

If the results of one or both retests fail to meet the requirement, the gas being tested shall be considered as not meeting the requirements of this specification for that classification.

TABLE 2
TESTS REQUIRED FOR CLASSIFICATION

	Gas Purity	Dew Point	Mixture Composition
Single gas	Req.	Req.	Not Applicable
Multicomponent gas	Req(1)	Req.(2)	Req.(3)
Special gas mixture(4)	Req.	Req.	Not Required

NOTES:
(1) Each gas of a multicomponent mixture shall be tested for and meet the purity requirements of that specific gas (see Section 9 and Table 1).
(2) The multicomponent gas mixture shall meet the dew point requirements not greater than the highest dewpoint of the individual gases in the mixture (see Section 10 and Table 1).
(3) Individually filled cylinders or one cylinder from each filling manifold group, shall be tested for and meet the requirements of Part B, Tests, Procedures, and Requirements for the mixture composition.
(4) These gases are classified as SG-B-G.

In the event that appropriate procedures were not followed in preparing the test sample(s) or in conducting the tests, the test shall be considered invalid, without regard to whether the test was actually completed, or whether test results met or failed to meet the requirement. In this case, the requirement for two retests of the gas sample does not apply.

9. Chemical Analysis

Samples of gas(es) for chemical analysis shall be drawn from an individual cylinder, vessel or from the gas outlet source. The sample shall be analyzed by acceptable methods. Results of chemical analysis of a specific gas(es) shall comply with the requirements of Table 1 for the gas being analyzed. The referee method for chemical analysis of gases shall be ASTM E 260, *Standard Practice for Packed Column Gas Chromatography*. When mixed gases are being analyzed, the volumetric percentage of minor components shall be within ±10 percent relative to the nominal percentage of the minor component of the classification. See 13.1 and 13.3 for examples.

10. Dew Point Determination

Sample gases for dew point analysis shall be drawn from the individual cylinder, vessel, or gas outlet source. Any standard dew point measurement method may be used. Dew point may be expressed in °F at one atmosphere pressure (14.7 psia), [°C at 760 mm of mercury], or in ppm. The Dew Point Conversion Chart, see Table 3, may be used to convert dew point measurements to or from °F, °C, or ppm. Results of the dew point test shall meet, or exceed, the requirements of Table 1 for the gases being analyzed.

PART C — MANUFACTURE, PACKAGING, AND IDENTIFICATION

11. Method of Manufacture

Shielding gases classified according to this specification may be manufactured by any method that will produce gas or gas mixtures that meet the requirements of this specification.

11.1 Cylinder Residual Gases. All gas containers shall either be evacuated or, if not evacuated, residual gases shall be analyzed for composition and purity prior to filling.[5]

12. Packaging

Gases and gas mixtures shall be packaged in accordance with Department of Transportation (DOT) regulations for protection during shipment and normal storage conditions.[6] Cylinder sizes shall be as agreed upon between purchaser and supplier. Cylinders shall be labeled in accordance with Sections 13 and 14.

13. Identification

13.1 Individual gas components are identified by the following codes:

A — Argon
C — Carbon Dioxide
He — Helium
H — Hydrogen
N — Nitrogen
O — Oxygen

The classification system is based on volumetric percentages. The classification designators remain the same for both U.S. Customary Units and the SI units. The shielding gas classification system is composed of the following designator and number arrangement:

(a) SG — Shielding Gas Designator. The letters SG at the beginning of each classification designation

[5] CGA P-15, *Filling of Industrial and Medical Nonflammable Compressed Gas Cylinders*, can be obtained from the Compressed Gas Association, Inc., 1725 Jefferson Davis Highway, Suite 1004, Arlington, VA 22202-4102.

[6] DOT regulations can be obtained from the Department of Transportation, NASSIF Building, 400 7th Street S.W., Washington, DC 20590.

TABLE 3
DEW POINT CONVERSION CHART

(1 Atmosphere) (70°F @ 14.7 psia/21°C @ 760 mm [Hg])

Dew Point			Dew Point			Dew Point		
°F	°C	ppm	°F	°C	ppm	°F	°C	ppm
−130	−90.0	0.1	−73	−58.3	13.3	−38	−38.9	144
−120	−84.4	0.25	−72	−57.8	14.3	−37	−38.3	153
−110	−78.9	0.63	−71	−57.2	15.4	−36	−37.8	164
−105	−76.1	1.00	−70	−56.7	16.6	−35	−37.2	174
−104	−75.6	1.08	−69	−56.1	17.9	−34	−36.7	185
−103	−75.0	1.18	−68	−55.6	19.2	−33	−36.1	196
−102	−74.4	1.29	−67	−55.0	20.6	−32	−35.6	210
−101	−73.9	1.40	−66	−54.4	22.1	−31	−35.0	222
−100	−73.3	1.53	−65	−53.9	23.6	−30	−34.4	235
−99	−72.8	1.66	−64	−53.3	25.6	−29	−33.9	250
−98	−72.2	1.81	−63	−52.8	27.5	−28	−33.3	265
−97	−71.7	1.96	−62	−52.2	29.4	−27	−32.8	283
−96	−71.1	2.15	−61	−51.7	31.7	−26	−32.2	300
−95	−70.6	2.35	−60	−51.1	34.0	−25	−31.7	317
−94	−70.0	2.54	−59	−50.6	36.5	−24	−31.1	338
−93	−69.4	2.76	−58	−50.0	39.0	−23	−30.6	358
−92	−68.9	3.00	−57	−49.4	41.8	−22	−30.0	378
−91	−68.3	3.28	−56	−48.9	44.6	−21	−24.4	400
−90	−67.8	3.53	−55	−48.3	48.0	−20	−28.9	422
−89	−67.2	3.84	−54	−47.8	51	−19	−28.3	448
−88	−66.7	4.15	−53	−47.2	55	−18	−27.8	475
−87	−66.1	4.50	−52	−46.7	59	−17	−27.2	500
−86	−65.6	4.78	−51	−46.1	62	−16	−26.7	530
−85	−65.0	5.3	−50	−45.6	67	−15	−26.1	560
−84	−64.4	5.7	−49	−45.0	72	−14	−25.6	590
−83	−63.9	6.2	−48	−44.4	76	−13	−25.0	630
−82	−63.3	6.6	−47	−43.9	82	−12	−24.4	660
−81	−62.8	7.2	−46	−43.3	87	−11	−23.9	700
−80	−62.2	7.8	−45	−42.8	92	−10	−23.3	740
−79	−61.7	8.4	−44	−42.2	98	−9	−22.8	780
−78	−61.1	9.1	−43	−41.7	105	−8	−22.2	820
−77	−60.6	9.8	−42	−41.1	113	−7	−21.7	870
−76	−60.0	10.5	−41	−40.6	119	−6	−21.1	920
−75	−59.4	11.4	−40	−40.0	128	−5	−20.6	970
−74	−58.9	12.3	−39	−39.4	136	−4	−20.0	1020

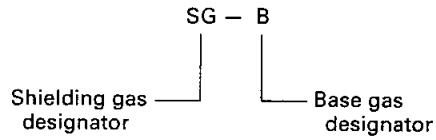

FIG. 1 CLASSIFICATION SYSTEM FOR A SINGLE GAS

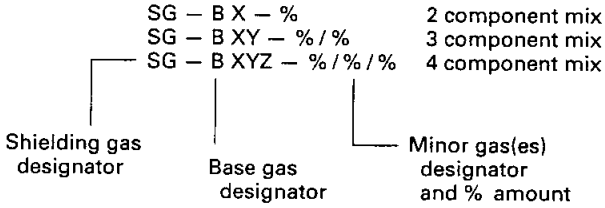

FIG. 2 CLASSIFICATION SYSTEM FOR MULTICOMPONENT SHIELDING GASES

identifies the product as a shielding gas. These letters are followed by a hyphen.

(b) SG-B — Base Gas Designator. Shielding gases are classified according to chemical composition. The letter immediately to the right of SG- indicates the singular or major gas in the shielding gas or mixture (see Fig. 1).

(c) SG-B XYZ — Minor Gas Component Designators. The letter(s) immediately following the base gas indicates the minor individual gas indicators in decreasing order of percent. These letters are followed by a hyphen.

(d) SG-B XYZ-%/%/% — Percentage Designators. A slash shall be used to separate the individual minor components' percentages for two or more component mixtures. See Fig. 2 and Table 4. The percentage designator shown need not be present on the container's label.

(e) S-B-G — Special Gas Mixture. Shielding gases may be classified as special and carry the "G" designation. The base gas must be identified. Minor gases need not be identified but must be covered in 13.1 or represented by the "X" designation. The percentage of each component shall be as agreed upon between the purchaser and supplier. See Fig. 3. The "X" designation shall be used when a gas mixture component is not covered by the six base gases specified. The gas represented by the "X" must appear in parentheses after the "G." See Fig. 4.

AWS classifications for typical gas mixtures are shown in Table 4.

TABLE 4
AWS CLASSIFICATIONS FOR TYPICAL GAS MIXTURES

AWS Classification	Typical Gas Mixtures, %	Gas
SG-AC-25	75/25	Argon + Carbon Dioxide
SG-AO-2	98/2	Argon + Oxygen
SG-AHe-10	90/10	Argon + Helium
SG-AH-5	95/5	Argon + Hydrogen
SG-HeA-25	75/25	Helium + Argon
SG-HeAC-7.5/2.5	90/7.5/2.5	Helium + Argon + Carbon Dioxide
SG-ACO-8/2	90/8/2	Argon + Carbon Dioxide + Oxygen
SG-A-G	Special	Argon + Mixture

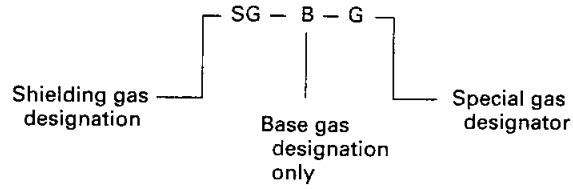

FIG. 3 CLASSIFICATION SYSTEM FOR SPECIAL MULTICOMPONENT SHIELDING GASES

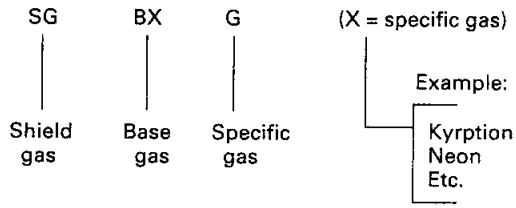

GENERAL NOTE:
When "X" is used in the classification, the designator gas represented by "X" must be disclosed within parentheses after the letter "G".

FIG. 4 CLASSIFICATION SYSTEM FOR "X" DESIGNATOR SHIELDING GASES

13.2 As stated in Section 9 of this specification, when mixed gases are classified in accordance with this specification, the percentage of the minor component(s) shall have a tolerance of ±10% relative to the minor percentage component. To compute the minor component range, multiply the minor component percentage by 0.10 to get the ± tolerance figure.

Example:

Ar – 25% CO_2 SG-AC-25

25 × 0.1 = 2.5
25 – 2.5 = 22.5
25 + 2.5 = 27.5
Ar with 22.5 to 27.5% CO_2

Ar – 2% O_2 SG-AO-2

2 × 0.1 = 0.2
2 – 0.2 = 1.8
2 + 0.2 = 2.2
Ar with 1.8 to 2.2% O_2

14. Marking of High-Pressure Cylinders, Liquid Containers, and Bulk Vessels

14.1 All cylinders and containers shall be marked in accordance with DOT regulations plus the following information, legibly marked on, or attached to, each cylinder:

- AWS specification and classification designation (year of issue may be excluded).
- Supplier's name and product trade designation (name of gas)
- Approved DOT warning label

14.2 The following example designates the minimum labeling requirement to comply with this specification.

This product conforms to AWS A5.32, classified as SG-AC-25

Annex
Guide to AWS Specification for Welding Shielding Gases

(This Annex is not a part of ANSI/AWS A5.32/A5.32M-97, *Specification for Welding Shielding Gases*, but is included for information purposes only.)

A1. Introduction

The purpose of this guide is to correlate the shielding gas classifications with their intended use so the specification can be used effectively. Appropriate welding processes are referred to whenever that can be done and when it would be helpful. Such references are intended only as examples rather than complete listings of the welding processes for which each shielding gas is suitable.

A2. Classification System

A2.1 The system for identifying the shielding gas classifications in this specification follows the standard pattern used in AWS filler metal specifications. The letter SG at the beginning of each classification designation stands for shielding gas. The letter immediately to the right of SG- indicates the singular or base gas in the shielding gas mixture.

For shielding gas mixtures, the letter designators immediately following the base gas designator indicate minor individual gas components in decreasing order of percent. These letters are followed by a hyphen and nominal whole numeric value of each minor gas volumetric percentage. If there are more than one minor gas component, each numeric value in decreasing order is separated by a virgule(/).

A2.2 "G" Classification

A2.2.1 This specification includes shielding gases classified as SG-B-G. The last "G" indicates that the shielding gas is of a "General" classification. It is "General" because not all of the particular requirements specified for each of the other classifications are met. The intent in establishing this classification is to provide a means by which shielding gases that differ, for example, chemical composition, from other classifications and do not meet the composition specified for any of the classifications in this document can still be classified. This is to allow a useful shielding gas — one that otherwise would have to await a revision of the specification — to be classified immediately under the existing document. This means that two shielding gases — each bearing the same "G" classification — may be quite different in some respect, for example, chemical composition.

A2.2.2 The point of difference (although not necessarily the amount of that difference) between shielding gas of a "G" classification and shielding gas of a similar classification without the "G" (or even with it, for that matter) will be readily apparent from the use of the words "not required" and "not specified" in the specification. The use of these words is as follows:

(a) Not Specified is used in those areas of the specification that refer to the results of some particular test. It indicates that the requirements for that test are not specified for that particular classification.

(b) Not Required is used in those areas of the specification that refer to the tests that must be conducted in order to classify a shielding gas. It indicates that that test is not required because the requirements (results) for the test have not been specified for that particular classification.

Restating the case, when a requirement is not specified, it is not necessary to conduct the corresponding test in order to classify a shielding gas to that classification. When a purchaser wants the information provided by that test, in order to consider a particular product of that classification for a certain application, the purchaser will have to arrange for that information with the supplier of the product. The purchaser will have to establish with that supplier just what the testing procedures and the acceptance requirements are to be

for that test. The purchaser should specify that information in the purchase order.

A2.2.3 Request for Shielding Gas Classification

A2.2.3.1 When a shielding gas cannot be classified according to some classification other than a "G" classification, the manufacturer may request that a classification be established for that shielding gas. The manufacturer may do this by following the procedure given here. When the manufacturer elects to use the "G" classification, the Committee on Filler Metals recommends that the manufacturer still request that a classification be established for that shielding gas, as long as the shielding gas is of commercial significance.

A2.2.3.2 A request to establish a new shielding gas classification shall be a written request, and it needs to provide sufficient detail to permit the Committee on Filler Metals or the Subcommittee to determine whether a new classification or the modification of an existing classification is more appropriate, and whether either is necessary to satisfy the need. The request needs to state the variables and their limits, for such a classification or modification. The request should contain some indication of the time by which completion of the new classification or modification is needed.

A2.2.3.3 The request should be sent to the Secretary of the Committee on Filler Metals at AWS Headquarters. Upon receipt of the request, the Secretary will do the following:

(a) Assign an identifying number to the request. This number shall include the date the request was received.

(b) Confirm receipt of the request and give the identification number to the person who made the request.

(c) Send a copy of the request to the Chair of the Committee on Filler Metals and the Chair of the particular Subcommittee involved.

(d) File the original request.

(e) Add the request to the log of outstanding requests.

A2.2.3.4 All necessary action on each request will be completed as soon as possible. If more than 12 months lapse, the Secretary shall inform the requestor of the status of the request, with copies to the Chairpersons of the Committee and Subcommittee. Any request outstanding after 18 months shall be considered not to have been answered in a "timely manner" and the Secretary shall report it to the Chair of the Committee on Filler Metals for action.

A2.2.3.5 The Secretary shall include a copy of the log of all requests pending and those completed during the preceding year with the agenda for each Committee on Filler Metals meeting. Any other publication of requests that have been completed will be at the option of the American Welding Society, as deemed appropriate.

A3. Acceptance

Acceptance of all shielding gases classified under this specification is in accordance with the tests and requirements of Part B and C of this specification. Any testing a purchaser requires of the supplier, for gases shipped in accordance with this specification, shall be clearly stated in the purchase order. In the absence of any such statement in the purchase order, the supplier may ship the gases with whatever testing the supplier normally conducts on gases of that classification. In such cases, acceptance of the material shipped will be in accordance with those requirements.

A4. Certification

The act of placing the AWS specification and classification designations on the packaging enclosing the product, constitutes the supplier's (manufacturer's) certification that the product meets all of the requirements of the specification.

The only testing requirement implicit in this "certification" is that the manufacturer has actually conducted the tests required by the specification on material that is representative of that being shipped, and that that material met the requirements of the specification. "Certification" is not to be construed to mean that tests of any kind were necessarily conducted on samples of the specific material shipped. Tests on such material may or may not have been conducted. The basis for the "certification" required by the specification is the classification test of "representative material" cited above, and the "Manufacturer's Quality Assurance Program" in ANSI/AWS A5.01, *Filler Metal Procurement Guidelines*.[7]

A5. Ventilation During Welding

A5.1 Five major factors govern the quantity of fumes in the atmosphere to which welders and welding operators are exposed during welding. They are the following:

(a) Dimensions of the space in which the welding is done (with special regard to the height of the ceiling).

[7] AWS standards can be obtained from AWS at 550 N.W. LeJeune Rd., Miami, FL 33126.

(b) Number of welders and welding operators working in that space.

(c) Rate of evolution of fumes, gases, or dust, according to the materials and processes used.

(d) The proximity of the welders or welding operators to the fumes, as these fumes issue from the welding zone, and to the gases and dusts in the space in which they are working.

(e) The ventilation provided to the space in which the welding is done.

A5.2 American National Standard ANSI/ASC Z49.1, *Safety in Welding, Cutting, and Allied Processes* (published by the American Welding Society), discusses the ventilation that is required during welding and should be referred to for details. Attention is drawn particularly to the sections on "Health Protection and Ventilation."

A6. Welding Considerations

The properties of gases affect the performance of all arc welding processes. The ionization potential of the shielding gas influences the ease of arc initiation and stability. Thermal conductivity of a gas determines the voltage and energy constant of the arc. Gases such as carbon dioxide can have higher heat conductivity than helium at arc temperatures because of the effects of disassociation and recombination.

Reactive and oxidizing gases such as carbon dioxide (CO_2) and oxygen (O_2) can have detrimental effects on base metals such as aluminum, nickel, titanium, zirconium, and tungsten. For this reason, carbon dioxide or oxygen cannot be used as the shielding gas for gas tungsten arc welding.

Proper gas selection is crucial to efficient welding in the most cost-effective manner. Many factors must be considered. These are not limited to the following:

(a) Type and thickness of base metal being welded
(b) Arc characteristics
(c) Metal transfer
(d) Travel speed
(e) Depth and width of fusion
(f) Cost of welding
(g) Mechanical properties
(h) Root opening
(i) Cleanliness of the base material
(j) Spatter
(k) Arc cleaning action
(l) Gas purity
(m) Joint configuration
(n) Welding position
(o) Fume generation

A7. Description and Intended Use of the Shielding Gases

A7.1 Single Gases. All single gases described in this specification may be purchased either as a liquid or as a gas. If liquid, the material must be gasified prior to being supplied to the welding area.

A7.1.1 SG-A (Argon). Argon is a chemically inert gas which is used both singularly and in combination with other gases to achieve desired arc characteristics for the welding of both ferrous and nonferrous metals. Almost all arc welding processes can use argon or mixtures containing argon to achieve good weldability, mechanical properties, arc characteristics and productivity. Argon is used for welding of nonferrous materials such as aluminum, nickel, copper, magnesium alloys, and reactive metals, which include zirconium and titanium. The low-ionization potential of argon creates an excellent current path and superior arc stability. In the GMAW process, argon produces a constricted arc column at a high current density which causes the arc energy to be concentrated in a small central area of the weld pool. The result is a depth of fusion profile which may have a distinct finger-like shape. Argon is also used for single-side melt-through welding with or without consumable inserts.

A7.1.2 SG-C (Carbon Dioxide). Carbon dioxide is an active gas used primarily for GMAW and FCAW. The heat of the arc dissociates the carbon dioxide into carbon monoxide and free oxygen. This oxygen will combine with elements transferring across the arc to form oxides which are released from the weld pool in the form of slag and scale. Although carbon dioxide is an active gas and produces an oxidizing effect, sound welds and acceptable mechanical properties can be achieved in many, but not all, metals and alloys. An electrode having higher amounts of deoxidizing elements is sometimes needed to compensate for the reactive nature of the gas. Carbon dioxide can be used for solid electrode GMAW with short circuiting and globular transfer and FCAW of carbon and stainless steel. Carbon dioxide cannot be used for spray transfer with GMAW.

The popularity of carbon dioxide is due to common availability as well as its lower cost per unit volume. The lower cost per unit of gas does not automatically translate to lowest cost per foot of deposited weld and is greatly dependent on the welding application. The final weld cost with carbon dioxide shielding gas is influenced by bead contour, electrode spatter, and spatter removal. The lower deposition efficiency for carbon

dioxide caused by fume and spatter loss will influence the final weld cost.

Argon is often mixed with carbon dioxide to improve the operating characteristics. If mechanical properties are to be maximized, a carbon dioxide and argon mixture is often recommended.

A7.1.3 SG-N (Nitrogen). Shielding gases containing nitrogen are not recommended for welding carbon steel. Nitrogen will combine with other elements at high temperatures which is why it is not recommended as a primary gas, but is used in combination with other gases for selected applications. Nitrogen is often used as a gas to protect the weld root from atmospheric contamination. Nitrogen root shielding of stainless steel welds may cause problems in those applications where control of the ferrite content is critical. Increased nitrogen content of the weld may reduce the ferrite level. Small additions (≤3%) of nitrogen have been combined with argon for GMA and GTA welding of duplex stainless steel.

A7.1.4 SG-He (Helium). Helium, a chemically inert gas, is used for weld applications requiring higher heat inputs. Helium may improve wetting action, depth of fusion, and travel speeds. It does not produce the stable arc provided by argon. Helium has higher thermal conductivity and a wider arc column than argon. The higher voltage gradient increases heat input compared with argon, promoting increased weld pool fluidity and better wetting action. This is an advantage when welding aluminum-based, magnesium-based, and copper-based alloys. Using GMAW, 100-percent helium will only produce globular transfer. The argon percentage must be at least 20 percent when mixed with helium to produce and maintain a stable spray transfer.

A7.1.5 SG-O (Oxygen). Oxygen is never used as a base component of a shielding gas. It can be used as a minor component.

A7.1.6 SG-H (Hydrogen). Hydrogen (H_2) is chemically active and most commonly used at low percentages (1 to 35%) as the minor component in a gas mixture (see Section A8, General Safety Considerations).

A7.2 Binary Shielding Gas Mixtures

A7.2.1 SG-AO (Argon + Oxygen Mixtures). The addition of oxygen to argon with the GMAW process improves the arc characteristics and increases weld pool fluidity by reducing the surface tension of the weld metal. Oxygen is an active gas which intensifies the arc plasma, increasing heat input, travel speed, depth of fusion, and wetting. In GMAW, the addition of small amounts (1 to 8%) of oxygen to argon stabilizes the welding arc, increases the filler metal droplet rate, lowers the spray arc transition current, and influences bead shape. The weld pool is more fluid allowing improved weld bead wetting. Oxygen is not used with GTAW because of its detrimental effect on the tungsten electrode.

A7.2.1.1 SG-AO-1 (Ar + 1% O_2). This mixture is primarily used for spray transfer on stainless steels. One-percent oxygen is usually sufficient to stabilize the arc, increase the droplet rate and provide good fluidity of the weld pool.

A7.2.1.2 SG-AO-2 (Ar + 2% O_2). This mixture is used for spray arc welding on carbon steels, low-alloy steels and stainless steels. It provides additional wetting action over SG-AO-1. Weld mechanical properties and corrosion resistance (stainless steels) of welds made using the SG-AO-2 and SG-AO-1 shielding gases are comparable.

A7.2.1.3 SG-AO-5 (Ar + 5% O_2). This mixture provides a more fluid but controllable weld pool. It is the most commonly used argon plus oxygen mixture for general carbon steel welding. The additional oxygen permits higher travel speeds on some weld applications.

A7.2.1.4 SG-AO-8 (Ar + 8% O_2). This mixture provides additional depth of fusion over SG-AO-5. Slightly lower arc voltage or increased wire feed speed should be used. The higher weld pool fluidity and lower spray transition current of this mixture are advantageous on some applications. This mixture can be used in the short circuiting and spray modes of transfer. Greater oxidation of the weld metal, with increased loss of manganese and silicon, should be expected.

A7.2.2 SG-AC (Argon + Carbon Dioxide Mixtures). The additions of carbon dioxide to argon can produce a wide range of welding characteristics from high-current spray transfer to low-current short circuiting transfer.

The dissociation of carbon dioxide in the arc provides oxygen for improved wetting and arc stabilization. The high thermal conductivity of carbon dioxide tends to increase the width of fusion as compared to SG-AO mixtures.

When using GMAW with solid carbon steel wires, SG-AC mixtures containing more than 20 percent carbon dioxide will not support spray transfer.

A7.2.2.1 SG-AC-1 through 10 (Ar + 1 to 10% CO_2). Mixtures in this range may produce all modes of metal transfer useful on a variety of steel thicknesses.

Depth of fusion is improved and porosity may be reduced when using SG-AC compared to SG-AO.

In the 5 to 10 percent carbon dioxide range the arc column becomes more defined. These mixtures are effective on material with mill scale. SG-AC-5 is commonly used with GMAW for heavy-section low-alloy steel welding.

A7.2.2.2 SG-AC-11 through 20 (Ar + 11 to 20% CO_2). This mixture range has been used with various GMAW and FCAW applications. Most applications are on carbon and low-alloy steels. By mixing argon and carbon dioxide within this range, maximum productivity on thin-gauge materials can be achieved. The lower carbon dioxide percentages increase deposition efficiency by lowering spatter loss.

A7.2.2.3 SG-AC-21 through 49 (Ar + 21 to 49% CO_2). Mixtures in this range are used in the short circuiting GMAW mode and all positions of flux cored arc welding.

SG-AC-25 is widely used to replace pure carbon dioxide. These mixes operate well on light-gauge material at low currents, and at high currents on heavy materials producing good arc stability, weld pool control, bead appearance, and high productivity.

A7.2.2.4 SG-AC-50 (Ar + 50% CO_2). This mixture (not supplied at full cylinder pressure because the CO_2 would liquefy a full pressure) is used where increased heat input and depth of fusion are needed. Recommended material thickness is $\frac{1}{8}$ in. [3 mm] minimum for the globular mode of metal transfer. This mixture is satisfactory for pipe welding using the short circuiting transfer mode. Good wetting and bead shape without excessive weld pool fluidity are the main advantages for the pipe welding application. When welding at high current levels, the metal transfer is more like welding in pure carbon dioxide than other previously described argon mixtures, but some reduction in spatter loss can be realized due to the argon addition.

A7.2.3 SG-AHe Gases (Argon + Helium Mixtures). These mixtures are often recommended for GMA and GTA welding of aluminum where an increased width of fusion is required and bead appearance is of primary importance. Generally, the heavier the material the higher the percentage of helium. Small percentages of helium, as low as 10%, will affect the arc. In GMAW, as the helium percentage is increased, the arc voltage and depth of fusion will increase while minimizing porosity.

A7.2.3.1 SG-AHe-10 through 50 (Ar + 10 to 50% He). These mixtures are used for welding nonferrous base metals. Mixtures in this range provide an increase in heat input and travel speed, with improved bead appearance.

A7.2.4 SG-HeA (Helium + Argon Mixtures). Helium and argon mixtures are used primarily for GMA and GTA welding of nonferrous base metals, such as reactive metals, aluminum, copper, nickel, magnesium, and their alloys. They are also used for welding some carbon steels. These mixtures are used on thicker base metals. Argon addition to a helium base gas will decrease the heat input and improve arc starting characteristics. As argon percentages increase, the arc voltage, spatter, and weld depth-to-width ratio will decrease. In GMAW, the argon content must be at least 20 percent to produce and maintain a stable spray transfer.

A7.2.4.1 SG-HeA-10 through 25 (He + 10 to 25% Ar). These mixtures are used for welding copper over $\frac{1}{2}$ in. [13 mm] thick and aluminum over 3 in. [75 mm] thick. Their high heat input improves weld fusion. They may be used for short circuiting transfer with nickel filler metals.

A7.2.4.2 SG-HeA-25 through 50 (He + 25 to 50% Ar). These mixtures increase heat input and reduce porosity of welds in copper, aluminum, and magnesium. They are used for welding aluminum and magnesium greater than $\frac{1}{2}$ in. [13 mm] thick in the flat position.

A7.2.5 SG-AH (Argon + Hydrogen Mixtures) (see Section A8, Safety Considerations). Commercial argon-hydrogen gas mixtures produce reducing atmospheres. SG-AH-1, SG-AH-2, or SG-AH-5 are used for GTAW, GMAW, and PAW on a variety of base metals including the following:

(a) nickel and nickel alloys

(b) austenitic chromium-nickel stainless steels

(c) low-alloy steels (PAW only)

Mixtures containing up to 15 percent hydrogen (SG-AH-15) are used for GTAW of chrome-nickel stainless steels. Its high heat conductivity makes these mixtures useful in selected GTAW applications. Additions of hydrogen increase weld heat input permitting faster travel speeds, increased depth of fusion, improved bead wetting, and broader weld bead profile. Hydrogen additions to argon provide a reducing atmosphere which removes oxygen and oxides from the weld area.

A7.2.6 SG-NH (Nitrogen + Hydrogen Mixtures). This root shielding gas may be used in the fabrication of chrome-nickel stainless steels. The ferrite precaution

outlined in A7.1.3 applies also to applications using SG-NH-5, or higher, as a root shielding medium.

A7.3 Ternary Shielding Gas Mixtures

A7.3.1 SG-ACO (Argon + Carbon Dioxide + Oxygen Mixtures). Mixtures containing these three components are versatile due to their ability to operate using short circuiting, globular, spray, and high-current-density spray transfer. Several ternary compositions are available, and their application will depend on the desired metal transfer.

A7.3.1.1 SG-ACO-5 through 10/1 through 6 (Ar + 5 to 10% CO_2 + 1 to 6% O_2). The advantage of these mixtures is their ability to shield carbon steel and low-alloy steel of all thicknesses using any mode of metal transfer. These mixtures produce good welding characteristics and mechanical properties on carbon and low-alloy steels. On thin-gauge base metals, the oxygen constituent improves arc stability at low current levels (30 to 60 A) permitting the arc to be kept short and controllable. This helps minimize excessive melt-through and distortion by lowering the total heat input into the weld zone.

A7.3.2 SG-AHeC and SG-HeAC (Argon + Helium + Carbon Dioxide Mixtures). Helium and carbon dioxide additions to argon increase the heat input to the weld, increasing bead wetting and fluidity. The weld bead profile becomes flatter and wider.

A7.3.2.1 SG-AHeC-10 through 40/1 through 15 (Ar + 10 to 40% He + 1 to 15% CO_2). Mixtures in this range have been developed for pulsed spray welding of carbon, low-alloy, and stainless steels. These mixtures are most often used on heavy sections, in positions other than flat. Good mechanical properties and weld pool control are characteristic of these mixtures.

A7.3.2.2 SG-HeAC-25 through 35/1 through 5 (He + 25 to 35% Ar + 1 to 5% CO_2). These mixtures are used for short circuit GMAW of high-strength steels and stainless steels, especially for welding positions other than flat. The carbon dioxide content is kept low to insure good weld metal toughness. The helium provides the heat necessary for good weld pool fluidity.

A7.3.2.3 SG-HeAC-7.5/2.5 (90% He + 7.5% Ar + 2.5% CO_2). This mixture is widely used for short circuit GMAW of stainless steel in all positions. The carbon dioxide content is kept low to minimize carbon pickup and assure good corrosion resistance, especially in multipass welds. The carbon dioxide plus argon addition provides good arc stability and depth of fusion. The high helium content provides higher heat input to overcome the high-viscosity nature of the stainless steel weld pool. Applications include welding carbon steel, stainless and alloy steels.

A7.3.3 SG-AHeO (Argon + Helium + Oxygen). Helium additions to argon plus oxygen mixtures increase arc energy with the GMAW process on ferrous base metals. Argon/helium/oxygen mixtures have been used for spray arc welding and surfacing low-alloy and stainless steels to improve the fluidity of the weld pool and the resultant bead shape as well as reduce porosity.

A7.4 Quaternary Shielding Gas Mixtures

A7.4.1 SG-AHeCO (Argon + Helium + CO_2 + O_2 Mixtures). This combination may be used for high-deposition GMAW using the high-current-density transfer mode. These mixtures produce weld metal with good mechanical properties, and can be used throughout a wide range of deposition rates. Their major application is welding low-alloy, high-strength steel base metals, and they have been used on carbon steel for high-productivity welding.

ARGON, CARBON DIOXIDE, HELIUM, AND NITROGEN HAZARD:

- Argon, carbon dioxide, helium, and nitrogen can displace oxygen in a worker's breathing zone which can result in asphyxiation, and possibly death, when released in poorly vented, confined work areas. Argon and carbon dioxide cause a special concern since they are heavier than air and may concentrate in low areas such as in the bottom of pressure vessels, tanks, pits, and ships.
- Unless adequate ventilation and breathing air are supplied, care must be taken with any of these gases when they are released in enclosed areas or confined spaces. A safety watch should be provided and in attendance anytime a worker is using any of these gases in a vessel.
- Additional information can be found in ANSI/ASC Z49.1, *Safety in Welding, Cutting, and Allied Processes*, CGA publications, and from suppliers of the aforementioned gases.

HYDROGEN WARNING:

- Hydrogen is a highly flammable gas. A mixture of hydrogen with oxygen or air in a confined area will explode when brought in contact with a flame or other source of ignition. Concentrations of hydrogen between 4 and 75 percent by volume in air are relatively easy to ignite by a low-energy spark and may cause an

explosion. Smoking, open flames, unapproved electrical equipment, and other ignition sources must not be permitted in hydrogen areas. Store containers outdoors or in other well-ventilated areas.

- Before making any installation, become thoroughly familiar with NFPA (National Fire Protection Association) Standards No. 50-A, *Standard for Gaseous Hydrogen Systems at Consumer Sites*; and 50-B, *Standard for Liquefied Hydrogen Systems at Consumer Sites*; and with all local safety codes. For further safety information, refer to supplier MSDS sheets on hydrogen safety.
- Take every precaution against hydrogen leaks. Escaping hydrogen cannot be detected by sight, smell, or taste.

A8. General Safety Considerations

A8.1 Burn Protection. Molten metal, sparks, slag, and hot work surfaces are produced by welding, cutting, and allied processes. These can cause burns if precautionary measures are not used. Workers should wear protective clothing made of fire-resistant material. Pant cuffs, open pockets, or other places on clothing that can catch and retain molten metal or sparks should not be worn. Pant legs should be worn over the outside of high-top shoes. Helmets or hand shields that provide protection for the face, neck, and ears, and a head covering to protect the head should be used. In addition, appropriate eye protection should be used.

When welding overhead or in confined spaces, ear plugs to prevent weld spatter from entering the ear canal should be worn in combination with goggles or equivalent to give added eye protection. Clothing should be kept free of grease and oil. Combustible materials should not be carried in pockets. If any combustible substance has been spilled on clothing, a change to clean, fire-resistant clothing should be made before working with open arcs or flame. Aprons, cape-sleeves, leggings, and shoulder covers with bibs designed for welding service should be used. Where welding or cutting of unusually thick base metal is involved, sheet metal shields should be used for extra protection. Mechanization of highly hazardous processes or jobs should be considered. Other personnel in the work area should be protected by the use of noncombustible screens or by the use of appropriate protection as described in the previous paragraph.

Before leaving a work area, hot workpieces should be marked to alert other persons of this hazard. No attempt should be made to repair or disconnect electrical equipment when it is under load. Disconnection under load produces arcing of the contacts and may cause burns or shock, or both. (Note: Burns can be caused by touching hot equipment such as electrode holders, tips, and nozzles. Therefore, insulated gloves should be worn when these items are handled, unless an adequate cooling period has been allowed before touching.)

The following sources are for more detailed information on personal protection:

(a) ANSI/ASC Z49.1, *Safety in Welding, Cutting, and Allied Processes*, published by the American Welding Society, 550 N.W. LeJeune Road, Miami, FL 33126.

(b) Code of Federal Regulations, Title 29 Labor, Chapter XVII, Part 1910, OSHA General Industry Standards available from the U.S. Government Printing Office, Washington, DC 20402.

(c) ANSI/ASC Z87.1, *Practice for Occupational and Educational Eye and Face Protection*, American National Standards Institute, 11 West 42 Street, New York, NY 10036.

(d) ANSI/ASC Z41.1, *Safety-Toe Footwear*, American National Standards Institute, 11 West 42 Street, New York, NY 10036.

A8.2 Electrical Hazards. Electric shock can kill. However, it can be avoided. Live electrical parts should not be touched. The manufacturer's instructions and recommended safe practices should be read and understood. Faulty installation, improper grounding, and incorrect operation and maintenance of electrical equipment are all sources of danger.

All electrical equipment and the workpieces should be grounded. The workpiece lead is not a ground lead. It is used only to complete the welding circuit. A separate connection is required to ground the workpiece. The workpiece should not be mistaken for a ground connection.

The correct cable size should be used, since sustained overloading will cause cable failure and result in possible electrical shock or fire hazard. All electrical connections should be tight, clean, and dry. Poor connections can overheat and even melt. Further, they can produce dangerous arcs and sparks. Water, grease, or dirt should not be allowed to accumulate on plugs, sockets, or electrical units. Moisture can conduct electricity.

To prevent shock, the work area, equipment, and clothing should be kept dry at all times. Welders should wear dry gloves and rubber-soled shoes, or stand on a dry board or insulated platform. Cables and connections should be kept in good condition. Improper or worn electrical connections may create conditions that could cause electrical shock or short circuits. Worn, damaged, or bare cables should not be used. Open-circuit voltage

should be avoided. When several welders are working with arcs of different polarities, or when a number of alternating current machines are being used, the open-circuit voltages can be additive. The added voltages increase the severity of the shock hazard.

In case of electric shock, the power should be turned off. If the rescuer must resort to pulling the victim from the live contact, nonconducting materials should be used. If the victim is not breathing, cardiopulmonary resuscitation (CPR) should be administered as soon as contact with the electrical source is broken. A physician should be called and CPR continued until breathing has been restored, or until a physician has arrived. Electrical burns are treated as thermal burns; that is, clean, cold (iced) compresses should be applied. Contamination should be avoided; the area should be covered with a clean, dry dressing; and the patient should be transported to medical assistance.

Recognized safety standards should be followed, such as ANSI/ASC Z49.1, *Safety in Welding, Cutting, and Allied Processes; National Electrical Code;* and NFPA No. 70, available from National Fire Protection Association, 1 Batterymarch Park, Quincy, MA 02269.

A8.3 Fumes and Gases. Many welding, cutting, and allied processes produce fumes and gases which may be harmful to health. Fumes are solid particles which originate from welding filler metals and fluxes, the base metal, and any coatings present on the base metal. Gases are produced during the welding process or may be produced by the effects of process radiation on the surrounding environment. Management personnel and welders alike should be aware of the effects of these fumes and gases. The amount and composition of these fumes and gases depend upon the composition of the filler metal, shielding gas, base metal, welding process, current level, arc length, and other factors.

The possible effects of overexposure range from irritation of eyes, skin, and respiratory system to more severe complications. Effects may occur immediately or at some later time. Fumes can cause symptoms such as nausea, headaches, dizziness, and metal fume fever. The possibility of more serious health effects exists when especially toxic materials are involved. In confined spaces, the shielding gases and fumes might displace breathing air to cause asphyxiation.

Various gases are generated during welding. Some are a product of the decomposition of fluxes and electrode coatings. Others are formed by the action of arc heat or ultraviolet radiation emitted by the arc on atmospheric constituents and contaminants. Potentially hazardous gases include carbon monoxide, oxides of nitrogen, ozone, and decomposition products of chlorinated hydrocarbons, such as phosgene.

One's head should always be kept out of the fumes. Sufficient ventilation, exhaust at the arc, or both, should be used to keep fumes and gases from one's breathing zone and the general area.

In some cases, natural air movement will provide enough ventilation. Where ventilation may be questionable, air sampling should be used to determine if corrective measures should be applied.

More detailed information on fumes and gases produced by the various welding processes may be found in the following:

(a) The permissible exposure limits required by OSHA can be found in CFR Title 29, Chapter XVII, Part 1910. The OSHA, *General Industry Standards*, is available from the Superintendent of Documents, U.S. Government Printing Office, Washington, DC 20402.

(b) The recommended threshold limit values for these fumes and gases may be found in *Threshold Limit Values for Chemical Substances and Physical Agents in the Workroom Environment*, published by the American Conference of Governmental Industrial Hygienists (ACGIH), 1330 Kemper Meadow Drive, Suite 600, Cincinnati, OH 45240-1634.

(c) The results of an AWS-funded study, *Fumes and Gases in the Welding Environment*, is available from the American Welding Society, 550 N.W. LeJeune Road, Miami, FL 33126.

A8.4 Radiation. Welding, cutting, and allied operations may produce radiant energy (radiation) harmful to health. One should become acquainted with the effects of this radiant energy.

Radiant energy may be ionizing (such as x-rays), or nonionizing (such as ultraviolet, visible light, or infrared). Radiation can produce a variety of effects such as skin burns and eye damage, depending on the radiant energy's wavelength and intensity, if excessive exposure occurs.

A8.4.1 Ionizing Radiation. Ionizing radiation is produced by the electron beam welding process. It is ordinarily controlled within acceptable limits by use of suitable shielding enclosing the welding area.

A8.4.2 Nonionizing Radiation. The intensity and wavelengths of nonionizing radiant energy produced depend on many factors, such as the process, welding parameters, electrode and base-metal composition, fluxes, and any coating or plating on the base metal. Some processes such as resistance welding and cold pressure welding ordinarily produce negligible quantities of radiant energy. However, most arc welding and

cutting processes (except submerged arc when used properly), laser beam welding and torch welding, cutting, brazing, or soldering can produce quantities of nonionizing radiation such that precautionary measures are necessary.

Protection from possible harmful effects caused by nonionizing radiant energy from welding include the following measures:

(a) One should not look at welding arcs except through welding filter plates which meet the requirements of ANSI/ASC Z87.1, *Practice for Occupational and Educational Eye and Face Protection*, published by American National Standards Institute, 11 West 42 Street, New York, NY 10036. It should be noted that transparent welding curtains are not intended as welding filter plates, but rather are intended to protect passersby from incidental exposure.

(b) Exposed skin should be protected with adequate gloves and clothing, as specified in ANSI/ASC Z49.1, *Safety in Welding, Cutting, and Allied Processes*, published by the American Welding Society.

(c) Reflections from welding arcs should be avoided, and all personnel should be protected from intense reflections. *(Note: Paints using pigments of substantially zinc oxide or titanium dioxide have a lower reflectance for ultraviolet radiation.)*

(d) Screens, curtains, or adequate distance from aisles, walkways, etc., should be used to avoid exposing passersby to welding operations.

(e) Safety glasses with UV-protective side shields have been shown to provide some protection from ultra-violet radiation produced by welding arcs.

A8.4.3 Ionizing radiation information sources include:

(a) AWS F2.1, *Recommended Safe Practices for Electron Beam Welding and Cutting*, available from the American Welding Society.

(b) Manufacturer's product information literature.

A8.4.4 Nonionizing radiation information sources include:

(a) Hinrichs, J. F. "Project committee on radiation-summary report." *Welding Journal*, January 1978.

(b) National Technical Information Service. Nonionizing radiation protection, Special Study No. 42-0053-77, *Evaluation of the Potential Hazards from Actinic Ultraviolet Radiation Generated by Electric Welding and Cutting Arcs*. Springfield, VA 22161: National Technical Information Service, ADA-033768.

(c) ———. Nonionizing radiation protection, Special Study No. 42-0312-77, *Evaluation of the Potential Retina Hazards from Optical Radiation Generated by Electrical Welding and Cutting Arcs*. Springfield, VA 22161: National Technical Information Service, ADA-043023.

(d) Moss, C. E., and Murray, W. E. "Optical radiation levels produced in gas welding, torch brazing, and oxygen cutting." *Welding Journal*, September 1979.

(e) Marshall, W. J., Sliney, D. H., et al. "Optical radiation levels produced by air-carbon arc cutting processes." *Welding Journal*, March 1980.

(f) American National Standards Institute, ANSI/ASC Z136.1, *Safe Use of Lasers*, published by American National Standards Institute, 11 West 42 Street, New York, NY 10036.

(g) ———. ANSI/ASC Z49.1, *Safety in Welding, Cutting, and Allied Processes*, published by the American Welding Society, 550 N.W. LeJeune Road, Miami, FL 33126.

(h) ———. ANSI Z87.1, *Practice for Occupational and Educational Eye and Face Protection*, published by American National Standards Institute, 11 West 42 Street, New York, NY 10036.

(i) Moss, C.E. "Optical radiation transmission levels through transparent welding curtains." *Welding Journal*, March 1979.

A9. Safety References

Material Safety Data Sheets (MSDS) are available from the supplier of the shielding gas. Additional safety references are shown in Table A1.

FILLER METAL PROCUREMENT GUIDELINES

SFA-5.01

(Identical with AWS Specification A5.01-92)

1. Scope

This document, together with an AWS filler metal specification, is intended to describe a uniform method for providing those specific details needed for filler metal procurement which consist of the following:

(1) The filler metal classification (selected from the pertinent AWS filler metal specification)

(2) The lot classification (selected from Section 5 of this document)

(3) The level of testing schedule (selected from Table 1 and Section 6, Level of Testing, of this document)

2. Certification

By affixing the AWS specification and classification designations to the packaging, or the classification to the product, the manufacturer certifies that the product meets the requirements of that specification.

3. Manufacturer's Quality Assurance System

3.1 The certification of the product is accomplished through a quality assurance program, by which the manufacturer verifies that the product meets the requirements of this specification. Such a program includes planning, documentation, surveillance, inspection, testing, and certification of the test results. It also includes control of the inspection and measuring equipment, as well as control of any nonconforming material. It involves auditing of the activities and provides for developing and implementing any corrective action that may become necessary.

3.2 It is the responsibility of the purchaser to review the quality assurance program of the manufacturer for conformance to the purchaser's specific requirements.

3.3 In the case of distributors who receive electrodes in bulk and package them for distribution, or who repackage under their own label, the distributor shall maintain an adequate control system to ensure that the package contents are traceable to the original manufacturer's records.

4. Definitions and Identification of Materials

4.1 Introduction. In production, the components of the filler metal are divided into discrete, predetermined quantities so that satisfactory tests with a sample from that quantity will establish that the entire quantity meets specification requirements. These quantities, known by such terms as *heats, lots, blends, batches,* and *mixes,* vary in size according to the manufacturer. For identification purposes, however, each manufacturer assigns a unique designation to each quantity. This designation usually consists of a series of numbers or letters, or combinations thereof, which will enable the manufacturer to determine the date and time (or shift) of manufacture, the type and source of the raw materials used, and the details of the procedures employed in producing the filler metal. This designation stays with the filler metal and can be used to identify the material later, in those cases in which identification is necessary.

4.2 Definitions. The terms *dry batch, dry blend, wet mix,* and *heat,* as they are defined and used in this document, refer to discrete quantities of the components used in producing a *lot* of filler metal. The definition of these terms and the considerations that must be given to the identification of the components to which they apply are as follows.

4.2.1 Dry Batch. A dry batch is the quantity of dry ingredients mixed at one time in one mixing vessel. Liquid binder, when added to a dry batch, produces a wet mix. A dry batch may be divided into smaller quantities, in which case the addition of the liquid binder produces as many wet mixes as there were smaller quantities.

4.2.2 Dry Blend. A dry blend consists of two or more dry batches from which quantities of each are combined proportionately, then mixed in a mixing vessel. This produces a larger quantity in which the ingredients are as uniformly dispersed as they would have been had the entire quantity been mixed together at one time in one large mixer. A dry blend, as in the case of a dry batch, may be used singly or divided into smaller quantities which, when the liquid binder is added, produce one or more wet mixes.

4.2.3 Wet Mix. A wet mix is the combination of liquid binder and a dry batch or a dry blend, or a portion thereof, mixed at one time in one mixing vessel.

4.2.4 Heat. A heat of metal for consumable inserts, brazing and braze welding filler metals, solid electrodes and rods, core wire for covered electrodes, and the sheath (strip or tubing of composite electrode wire and rod) is defined by one of the following, depending on the method of melting and refining of the metal.

4.2.4.1 Where slag-metal or gas-metal reactions occur in producing the metal (e.g., open hearth, electric arc, basic oxygen, argon-oxygen), a heat is the material obtained from one furnace melt.

4.2.4.2 Where significant chemical reactions do not occur in producing the metal (e.g., induction melting in a controlled atmosphere or in a vacuum), a heat is an uninterrupted series of melts from one controlled batch of metals and alloying ingredients in one melting furnace under the same melting conditions. Each melt shall conform to the chemical composition range approved by the purchaser of the material (i.e., the producer of the filler metal).

4.2.4.3 In processes involving continuous melting and casting (e.g., consumable electrode remelt), a heat is an uninterrupted series of remelts in one furnace under the same remelting conditions using one or more consumable electrodes produced from a heat, as defined in 4.2.4.1 or 4.2.4.2. Each remelt shall conform to the chemical composition range approved by the purchaser of the material (i.e., the producer of the filler metal).

4.3 Identification of Consumable Inserts, Brazing and Braze Welding Filler Metal, Solid Electrode Wire, Rods, Strip, Core Wire for Covered Electrodes, and the Sheath (Strip or Tubing) of Composite Electrodes

4.3.1 Heat Number. Solid wire, electrode core wire, rod, strip, consumable inserts, and brazing filler metals identified by heat number shall consist of material from a single heat of metal.

4.3.2 Controlled Chemical Composition. Solid wire, electrode core wire, rod, strip, consumable inserts, and brazing and braze welding filler metal identified by controlled chemical composition, rather than by heat number, shall consist of mill coils of one or more heats from which samples have been taken for chemical analysis.[1] The results of the analysis of each sample must be within the manufacturer's composition limits for that material. Coils from mills that do not permit spliced-coil practice need be sampled on only one end. Coils from mills that permit spliced-coil practice must be sampled on both ends and shall have no more than a single splice per coil.

4.4 Identification of Covering Mix

4.4.1 Wet Mix. Covering identified by wet mix shall consist of a single wet mix for each lot of electrodes.

4.4.2 Controlled Chemical Composition. Covering identified by controlled composition (rather than by wet mix) shall consist of one or more wet mixes and shall be subjected to sufficient tests, both before and after it has been applied to the core wire, to assure that all wet mixes within the lot are equivalent. These tests shall include chemical analysis, the results of which must fall within the manufacturer's acceptance limits. The identification of the test procedure and the results of the tests shall be recorded.

4.5 Identification of Core Ingredients

4.5.1 Dry Blend. Core ingredients identified by dry blend shall consist of a single dry batch or dry blend.

4.5.2 Controlled Chemical Composition. Core ingredients identified by controlled composition consist of one or more dry blends and shall be subjected to sufficient tests to assure that all dry blends within the lot are equivalent. These tests shall include chemical analysis, the results of which must fall within the manufacturer's acceptance limits. The identification of the test procedure and the results of the tests shall be recorded.

5. Lot Classification

5.1 Covered Electrodes

5.1.1 Class C1. A Class C1 lot of covered electrodes is the manufacturer's standard lot, as defined in the manufacturer's quality assurance program.

[1] Analysis of coils is not required for aluminum or deoxidized copper filler metal.

5.1.2 Class C2. A Class C2 lot of covered electrodes is the quantity, not exceeding 100 000 lbs (45 350 kg), of any one size and classification produced in 24 hours of consecutively scheduled production (i.e., consecutive normal work shifts).

5.1.3 Class C3. A Class C3 lot of covered electrodes is the quantity, not exceeding 100 000 lbs (45 350 kg), of any one size and classification produced in 24 hours of consecutively scheduled production (i.e., consecutive normal work shifts). Class C3 electrodes shall be produced from covering identified by wet mix (4.4.1) or controlled chemical composition (4.4.2) and core wire identified by heat number (4.3.1) or controlled chemical composition (4.3.2).[2]

5.1.4 Class C4. A Class C4 lot of covered electrodes is the quantity of any one size and classification produced from one wet mix (4.4.1) and one heat of core wire (4.3.1).[3]

5.1.5 Class C5. A Class C5 lot of covered electrodes is the quantity of one size and classification produced from one dry blend of covering mixture and one heat of core wire (4.3.1).

5.2 Bare Solid Electrodes and Rods, Brazing and Braze Welding Filler Metal, and Consumable Inserts

5.2.1 Class S1. A Class S1 lot of bare solid electrodes and rods, brazing and braze welding filler metal, and consumable inserts is the manufacturer's standard lot, as defined in the manufacturer's quality assurance program.

5.2.2 Class S2. A Class S2 lot of bare solid electrodes and rods, brazing and braze welding filler metal, and consumable inserts is the quantity, not exceeding 100 000 lbs (45 350 kg), of one classification, size, form, and temper produced in 24 hours of consecutively scheduled production (i.e., consecutive normal work shifts). Class S2 electrodes shall be produced from one heat (4.3.1) or from material identified by controlled chemical composition (4.3.2).

5.2.3 Class S3. A Class S3 lot of bare solid electrodes and rods, brazing and braze welding filler metal, and consumable inserts is the quantity of one size produced in one production cycle from one heat.

5.2.4 Class S4. A Class S4 lot of bare solid electrodes and rods, brazing and braze welding filler metal, and consumable inserts is the quantity, not exceeding 100 000 lbs (45 350 kg), of one classification, size, form, and temper produced under one production schedule. Class S4 electrodes shall be produced from one heat (4.3.1) or from material identified by controlled chemical composition (4.3.2).

5.3 Flux Cored Electrodes and Metal Cored Electrodes and Rods

5.3.1 Class T1. A Class T1 lot of flux cored electrodes, or metal cored electrodes and rods, is the manufacturer's standard lot, as defined in the manufacturer's quality assurance program.

5.3.2 Class T2. A Class T2 lot of flux cored electrodes, or metal cored electrodes and rods, is the quantity, not exceeding 100 000 lbs (45 350 kg), of one classification and size produced in 24 hours of consecutively scheduled production (i.e., consecutive normal work shifts). Class T2 electrodes shall be produced from tube or strip identified by heat number (4.3.1) or by controlled chemical composition (4.3.2). Identification of the core ingredients shall be as specified in 4.5.1 or 4.5.2.

5.3.3 Class T3. A Class T3 lot of flux cored electrodes, or metal cored electrodes and rods, is the quantity produced from one heat (4.3.1) and one dry batch or one dry blend of core materials. Identification of the core ingredients shall be as specified in 4.5.1.

5.3.4 Class T4. A Class T4 lot of flux cored electrodes, or metal cored electrodes and rods, is the quantity, not exceeding 100 000 lbs (45 350 kg), of one classification and size produced under one production schedule from tube or strip identified by heat number (4.3.1) or controlled chemical composition (4.3.2). Identification of the core ingredients shall be as specified in 4.5.1 or 4.5.2.

5.4 Flux for Submerged Arc Welding and Brazing and Braze Welding

5.4.1 Class F1. A Class F1 lot of flux is the manufacturer's standard lot, as defined in the manufacturer's quality assurance program.

5.4.2 Class F2. A Class F2 lot of flux is the quantity produced from the same combination of raw materials under one production schedule.

6. Level of Testing

6.1 General Provision. The level of the testing schedule shall be selected by the purchaser from those listed in Table 1.

[2] For metal cored covered electrodes, Class T2 core wire shall be used (see 5.3.2).

[3] For metal cored covered electrodes, Class T3 core wire shall be used (see 5.3.3)

TABLE 1
LEVEL OF TESTING

Schedule	Section Requirements	Reference
F[a]	The manufacturer's standard testing level	6.2
G	Tests of material from any production run of the product within the 12 months preceding the date of purchase order	6.3
H	Chemical analysis only, for each lot shipped	6.4
I	Tests called for in Table 2, for each lot shipped	6.5
J	All classification tests called for in the AWS filler metal specification, for each lot shipped	6.6
K[b]	All tests specified by the purchaser, for each lot shipped	6.7

NOTES:
a. This schedule will apply automatically if a specific schedule is not designated.
b. Some additional tests may be found in Section 8, Supplementary Requirements.

6.2 Schedule F. The level of testing shall be the manufacturer's standard. The statement, "The product supplied shall meet the requirements of the applicable AWS filler metal specification, when tested in accordance with that specification" and a summary of the typical properties of the material, when tested in that manner, shall be supplied upon written request. The lot classification will be the manufacturer's standard.

6.3 Schedule G. A Certified Report of Tests shall be supplied for material from any production run of the product made within the twelve months preceding the date of the purchase order. This will include the results of all tests prescribed for that classification in the AWS specification. For nonferrous material identified by controlled composition, certification of conformance to the chemical composition limits of the lot shall be supplied. The lot classification is the manufacturer's standard.

6.4 Schedule H. Chemical analysis of each lot shipped shall be supplied by the manufacturer. The analysis will include those elements prescribed for that classification in the AWS specification. For nonferrous material identified by controlled composition, certification of conformance to the chemical composition limits of the lot shall be supplied. The lot classification shall be specified by the purchaser from those listed in Section 5, Lot Classification, of this document.

6.5 Schedule I. A Certified Report of Tests called for in Table 2 shall be supplied by the manufacturer for each lot shipped. These tests represent a consensus of those frequently requested for consumable certification; however, they do not necessarily include all tests required for Schedule J. The tests shall be performed as prescribed for that classification in the AWS specification. For nonferrous material identified by controlled composition, certification of conformance to the chemical composition limits of the lot shall be supplied. The lot classification shall be specified by the purchaser from those listed in Section 5, Lot Classification, of this document.

6.6 Schedule J. A Certified Report of Tests required for that classification in the AWS specification shall be supplied by the manufacturer for each lot shipped. For nonferrous material identified by controlled composition, certification of conformance to the chemical composition limits of the lot shall be supplied. The lot classification shall be specified by the purchaser from those listed in Section 5, Lot Classification, of this document.

6.7 Schedule K. In addition to, or in place of, any of the tests called for in the applicable AWS specification, the purchaser may require other tests such as testing after a specified heat treatment or alloy identity procedures (see Section 8, Supplementary Requirements, for detailed alloy identity procedures). In all such cases, the purchaser shall identify on the purchase order the specific tests that are to be conducted, the procedures to be employed, and the requirements that must be met. The lot classification shall be specified by the purchaser from those listed in Section 5, Lot Classification, of this document.

7. Retest

If any test fails to meet its requirement, that test shall be repeated twice. The results of both retests shall meet the requirement. Specimens or samples for retest may be taken from the original test assembly or sample, or from one or two new test assemblies or samples. For chemical analysis, the retest need be only for those specific elements that failed to meet their requirement.

TABLE 2
SCHEDULE I — REQUIRED TESTS[a,b,c]

Product Type	Carbon Steel	Low Alloy Steel	Stainless Steel	Nickel and Ni-Alloy	Surfacing		Cast Iron	Aluminum and Al-Alloy	Copper and Cu-Alloy	Magnesium and Mg-Alloy	Titanium and Ti-Alloy	Zirconium and Zr-Alloy	Brazing and Braze Welding Filler Metals
Covered Solid and Metal Cored (Composite) Electrodes for SMAW	(A5.1) 1,2,3,4,5[d]	(A5.5) 1,2,3,4,5[d]	(A5.4) 1	(A5.11) 1,2,4,6	(A5.13) 1	(A5.21) 1	(A5.15) 1	(A5.3) 1	(A5.6) 1,4	—	—	—	—
Bare Solid and Metal Cored (Composite) Rods and Electrodes for GTAW, PAW, GMAW, and EGW	(A5.18) 1,2,4 (A5.26) 1,2,3,4	(A5.26) 1,2,3,4 (A5.28) 1,2,4	(A5.9) 1	(A5.14) 1	(A5.13) 1	(A5.21)[e] 1	(A5.15) 1	(A5.10) 1,4[f],9[f]	(A5.7) 1	(A5.19) 1	(A5.16) 1	(A5.24) 1	—
Bare Solid and Metal Cored (Composite) Electrodes for SAW	(A5.17) 1	(A5.23) 1	(A5.9) 1	(A5.14) 1	—	—	—	—	—	—	—	—	—
Flux Cored Electrodes for FCAW and EGW	(A5.20) 1,2,3,4 (A5.26) 1,2,3,4	(A5.26) 1,2,3,4 (A5.29) 1,2,3,4	(A5.22) 1	—	—	—	(A5.15) 1	—	—	—	—	—	—
Solid or Metal Cored Electrode — Flux Combination for SAW and ESW	(A5.17) 1,2,3,4 (A5.25) 1,2,3,4	(A5.23) 1,2,3,4 (A5.25) 1,2,3,4	—	—	—	—	(A5.15) 1	—	—	—	—	—	—
Solid and Composite Rods for OFW	(A5.2) 1	(A5.2) 1	—	—	(A5.13) 1	(A5.21) 1	(A5.15) 1	(A5.10) 1,9	(A5.27) 1	(A5.19) 1	—	—	—
Consumable Inserts	(A5.30) 1	(A5.30) 1	(A5.30) 1	(A5.30) 1	—	—	—	—	—	—	—	—	—
Bare Brazing and Braze Welding Filler Metals	—	—	—	—	—	—	—	—	—	—	—	—	(A5.8) 1
Vacuum Grade Brazing Fillers	—	—	—	—	—	—	—	—	—	—	—	—	(A5.8) 1,7
Brazing Metal Powders	—	—	—	—	—	—	—	—	—	—	—	—	(A5.8) 1,8

NOTES:

a. Designations in parentheses refer to the AWS filler metal specification.

b. Tests called for in this table shall be performed only when they are required by the applicable AWS specification for the particular classification involved. Tests shall be performed in the manner prescribed by the applicable specification. Testing to one current and polarity shall be adequate.

c. Test Designations are as follows:

1 — Chemical analysis
2 — Tensile
3 — Impact
4 — Soundness (x-ray)
5 — Moisture test
6 — Bend (face, side, or both)
7 — Spattering characteristics
8 — Sieve analysis
9 — Bead-on-plate weld test

d. Low hydrogen electrodes only

e. Electrodes used for SMAW

f. Test 4 — for electrodes
Test 9 — for rods

8. Supplementary Requirements — Department of Defense

8.1 Inspection Requirements. Unless otherwise specified in the contract or purchase order, the manufacturer is responsible for the performance of all inspection requirements (examinations and tests) as specified in Schedule K, Table 1, herein. Except as otherwise specified in the contract or purchase order, the manufacturer may use "in-house" facilities or others deemed suitable for the performance of the inspection requirements specified herein, unless disapproved by the customer. The customer reserves the right to perform any of the inspections set forth in this specification, where such inspections are deemed necessary, to ensure supplies and services conform to prescribed requirements.

8.1.1 Classification of Inspections. The inspection requirements specified herein are classified as follows:

(a) Qualification inspection

(b) Quality conformance inspection

8.1.2 Inspection Conditions. Unless otherwise specified, all inspections shall be performed in accordance with the conditions specified herein and environmental conditions shall be ambient laboratory conditions.

8.1.3 Qualification Inspection. Qualification inspection shall be conducted at a laboratory satisfactory to the customer. The inspection shall consist of the examinations and tests specified in the procurement documents. The manufacturer shall provide and maintain an inspection system acceptable to the customer for supplies and services covered by this specification.

8.2 Alloy Identity. Alloy identity procedures provide type separation through quality checks at all phases of production in the manufacture of filler metals. The test method may include chemical analysis, metal sorting devices, or a combination of methods. When required, alloy identity procedures shall be specified in Procurement Detail Forms using Item III, Other Requirements.[4]

8.2.1 Core Wire Alloy Identity. Each end of rod, wire, or strip to be spliced during processing shall be tested for alloy identity just prior to splicing at the process station, except when splicing is done to repair a wire break without removing the wire from the process line. Both ends of each coil drawn to finish size shall be tested for alloy identity prior to cutting into electrode core wire lengths.

8.2.1.1 Single Coil. For continuous process operations where a single rod coil is drawn to finish size, straightened and cut to length without removal from the machine, both ends of each rod coil shall be alloy identity tested immediately prior to the start of the continuous processing operation.

8.2.1.2 Multiple Coils. When multiple coils are to be spliced during continuous processing operations, each end of each coil to be spliced shall be alloy identity tested at the process station just prior to splicing. In addition, the leading end of the first coil and the tail end of the last coil for each continuous process run shall be alloy identity tested.

8.3 Responsibility for Compliance. All items shall meet all applicable requirements. The inspections set forth in this specification shall become a part of the manufacturer's overall inspection system or quality program. The absence of any inspection requirements in the specification shall not relieve the contractor of the responsibility of ensuring that all products or supplies submitted for acceptance comply with all requirements of the contract. Sampling inspection, as part of the manufacturing operations, is an acceptable practice to ascertain conformance to requirements; however, this does not authorize submission of known defective material, either indicated or actual, nor does it commit the customer to accept defective material.

---

[4] See Tables A1 through A7 (in the Appendix) for Procurement Detail Forms and examples of their use.

Appendix
Guide to AWS Filler Metal Procurement Guidelines

(This Appendix is not a part of ANSI/AWS A5.01-93, *Filler Metal Procurement Guidelines,* but is included for information only.)

A1. Introduction

This guide is appended to the specification as a source of information; it is not mandatory and does not form a part of the specification. Its purpose is to provide descriptive information and examples that will aid in the use of A5.01, *Filler Metal Procurement Guidelines.*

A2. General Information

The general requirements, testing requirements and procedures, method of manufacture, identification, and packaging for filler metals are specified in the filler metal specification and are not intended to be duplicated or modified in this specification, except as the purchaser specifies. The complete list of filler metal specifications is given for reference in the back of this document.

Those specifications, used in conjunction with these Procurement Guidelines, provide a basis for specifying in a procurement document the filler metal requirements in a precise, reproducible, uniform manner.

The Procurement Detail Forms in Tables A1 through A5 are suggested forms intended to serve as a check list for detailing filler metal requirements for procurement. They could also serve as a basis for efficient communication between departments within an organization (e.g., communication between welding or produc-

TABLE A1
SUGGESTED PROCUREMENT DETAIL FORM FOR COVERED ELECTRODES

I.	General	
	A. Quantity	_____
	B. AWS Specification	_____
	C. AWS Classification	_____
	D. Supplemental Designators, if required	_____
	E. Diameter	_____
	F. Length	_____
	G. Unit Package Type and Weight	
	1. Carton	_____
	2. Can	_____
	3. Other	_____
II.	Certification and Testing	
	A. Lot Classification (5.1)*	_____
	B. Level of Testing (6.1 through 6.7)*	_____
III.	Other Requirements	_____

*When specific information is not given (left blank), the requirements of the AWS specification apply (see the Certification and Acceptance clauses in the body and the explanation of each in the Appendix of the specification invoked in IB above).

TABLE A2
SUGGESTED PROCUREMENT DETAIL FORM FOR BARE SOLID ELECTRODES AND RODS

I.	General	
	A. Quantity	_____
	B. AWS Specification	_____
	C. AWS Classification	_____
	D. Supplemental Designators, if required	_____
	E. Diameter	_____
	F. Length (for rods)	_____
	G Unit Package Type and Weight	_____
	1. Spool	_____
	2. Coil with Support	_____
	3. Coil without Support	_____
	4. Rim (reel)	_____
	5. Drum	_____
	6. Straight Lengths	_____
	7. Other	_____
II.	Certification and Testing	
	A. Lot Classification (5.2)*	_____
	B. Level of Testing (6.1 through 6.7)*	_____
III.	Other Requirements	_____

*Where specific information is not given (left blank), the requirements of the AWS specification apply (see the Certification and Acceptance clauses in the body and the explanation of each in the Appendix of the specification invoked in IB above).

TABLE A3
SUGGESTED PROCUREMENT DETAIL FORM FOR FLUX CORED AND METAL CORED ELECTRODES AND RODS

I. General	
A. Quantity	_____
B. AWS Specification	_____
C. AWS Classification	_____
D. Supplemental Designators, if required	_____
E. Diameter	_____
F. Unit Package Type and Weight	_____
1. Spool	_____
2. Coil with Support	_____
3. Coil without Support	_____
4. Rim (reel)	_____
5. Drum	_____
6. Other	_____
II. Certification and Testing	
A. Lot Classification (5.3)*	_____
B. Level of Testing (6.1 through 6.7)*	_____
III. Other Requirements	_____

*Where specific information is not given (left blank), the requirements of the AWS specification apply (see the Certification and Acceptance clauses in the body and the explanation of each in the Appendix of the specification invoked in IB above).

tion departments and purchasing concerning the specific requirements for filler metal to be procured).

Examples of the manner in which the Procurement Detail Forms might be used are given in Tables A6 and A7. In Table A6, the four examples demonstrate the manner in which different packaging, lot classification, supplemental designators, and testing requirements would be specified in a purchase order for 1000 pounds (453 kg) of $^{3}/_{16}$ in. (4.8 mm) diameter E7018 electrodes. The differences are summarized below.

Example 1: The test and certification requirements specified are those the manufacturer of the electrodes uses as "standard practice" in the conduct of the manufacturer's business (see Table 1 in the body of this specification).

Example 2: Requirements include 10 lb unit packages, a –1 (read as "dash one") supplemental designator, and, for the lot shipped, a certificate showing the results of the chemical analysis, the tensile, impact, and soundness tests, and the moisture content of the covering (for low hydrogen electrodes, as the filler metal specification requires). See Tables 1 and 2. The lot classification, in this case, is the manufacturer's standard lot (see 5.1.1).

Example 3: Requirements include 10 lb unit packages, an H4 supplemental designator, and, for the lot shipped, a certificate showing the results of all tests ANSI/AWS A5.1 requires for the classification of E7018 electrodes. The definition of the lot classification, in this case, is given in 5.1.3.

Example 4: The requirements here are the same as in Example 3, except that the electrode length is 18 in. and the supplemental designator is H4R. The lot classification is as defined in 5.1.2 and the level of testing is that which the purchaser has specified in Item III, Other Requirements. Those tests, in this case, would be the tests required for classification of the electrode, except that the mechanical property tests (strength and toughness) would be conducted on weld metal obtained from the test assembly after the assembly had been given a postweld heat treatment at 1200 ± 25°F (650 ± 15°C) for 12 hours with the heating and cooling rates specified in Item III, Other Requirements.

Table A7 demonstrates the use of the Procurement Detail Form for listing the requirements for obtaining straight lengths (rods) and spooled (electrode) aluminum filler metal to filler metal specification ANSI/AWS A5.10, *Specification for Bare Aluminum and Aluminum Alloy Welding Electrodes and Rods.* Example 5 is for rods and Example 6 is for spooled electrodes. In both cases, the tests to be conducted are those called for in Table 2, as indicated by Schedule I (see Table 1 for description). The tests for aluminum rods are different from those for aluminum electrodes, but no other requirements are specified in this case.

TABLE A4
SUGGESTED PROCUREMENT DETAIL FORM FOR SUBMERGED ARC ELECTRODES AND FLUX AND BRAZING AND BRAZE WELDING FILLER METAL

	Electrode	Flux
I. General		
A. Quantity	_____	_____
B. AWS Specification	_____	_____
D. Supplemental Designators, if required	_____	_____
E. Diameter	_____	_____
F. Unit Package Type and Weight	_____	_____
1. Spool	_____	_____
2. Coil with Support	_____	_____
3. Coil without Support	_____	_____
4. Rim (reel)	_____	_____
5. Drum	_____	_____
6. Bag, Box or Drum (for flux)	_____	_____
7. Other	_____	_____
II. Certification and Testing		
A. Lot Classification (5.2 and 5.4)*	_____	_____
B. Level of Testing (6.1 through 6.7)*	_____	_____
III. Other Requirements	_____	_____

*Where specific information is not given (left blank), the requirements of the AWS specification apply (see the Certification and Acceptance clauses in the body and the explanation of each in the Appendix of the specification invoked in IB above.

TABLE A5
SUGGESTED PROCUREMENT DETAIL FORM FOR CONSUMABLE INSERTS

I. General	
A. Quantity[a]	_____
B. AWS Specification	_____
C. AWS Classification	_____
D. Shape (Class)	_____
E. Style	_____
F. Size	_____
II. Certification and Testing	_____
A. Lot Classification (5.2)[b]	_____
B. Level of Testing (6.1 through 6.7)[b]	_____
III. Other Requirements	_____

NOTES:

a. Number of pieces or feet, according to the style.

b. Where specific information is not given (left blank), the requirements of the AWS specification apply (see the Certification and Acceptance clauses in the body and the explanation of each of the Appendix of the specification invoked in IB above).

TABLE A6
EXAMPLE OF THE USE OF THE PROCUREMENT DETAIL FORM FOR COVERED ELECTRODES

	Examples			
	1	2	3	4
I. General				
A. Quantity	1000 lbs	1000 lbs	1000 lbs	1000 lbs
B. AWS Specification	A5.1	A5.1	A5.1	A5.1
C. AWS Classification	E7018	E7018	E7018	E7018
D. Supplemental Designators		-1	H4	H4R
E. Diameter	3/16 in.	3/16 in.	3/16 in.	3/16 in.
F. Length	14 in.	14 in.	14 in.	18 in.
G. Unit Package Type and Weight				
1. Carton	50 lb			
2. Can		10 lb	10 lb	10 lb
3. Other				
II. Certification and Testing				
A. Lot Classification	C1	C1	C3	C2
B. Level of Testing	Schedule F	Schedule I	Schedule J	Schedule K
III. Other Requirements (Example No. 4 only)	The lots of electrodes that are shipped must meet all classification test requirements of the specification. The strength and toughness of the weld metal must meet specification requirements after a postweld heat treatment at 1200 ± 25°F for 12 hours. The heating and cooling rates above 600°F shall not exceed 200°F/hour.			

TABLE A7
EXAMPLE OF THE USE OF THE PROCUREMENT DETAIL FORM FOR BARE SOLID ALUMINUM ELECTRODES AND RODS

	5	6
I. General		
A. Quantity	400 lbs	1000 lbs
B. AWS Specification	A5.10	A5.10
C. AWS Classification	R4043	ER4043
D. Diameter	3/32 in.	3/64 in.
E. Length	36 in.	—
F. Unit Package Type and Weight		
1. Spool	—	4 in., 1 lb
2. Coil with Support	—	—
3. Coil without Support	—	—
4. Rim (reel)	—	—
5. Drum	—	—
6. Straight Lengths	5 lbs	—
II. Certification and Testing		
A. Lot Classification	Class S2	Class S2
B. Level of Training	Schedule I	Schedule I
III. Other Requirements	None	None